ISO 21287, Series CCL-IC



AVENTICS™ ISO 21287, Series CCL-IC

EMERSON.

ISO 21287, Series CCL-IC

- Ø 16-100 mm
- Ports M5 G 1/8
- double-acting
- with magnetic piston
- Cushioning elastic
- Piston rod External thread
- ATEX optional
- Optionally heat-resistant



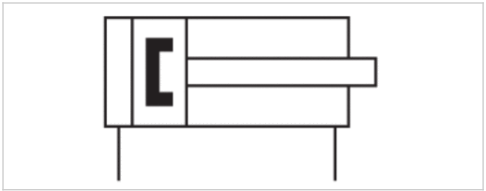

Standards	ISO 21287
Certificates	ATEX optional
Compressed air connection	Internal thread
Working pressure min./max.	1 ... 10 bar
Ambient temperature min./max.	-20 ... 80 °C
Medium temperature min./max.	-20 ... 80 °C
Medium	Compressed air
Max. particle size	50 µm
Oil content of compressed air	0 ... 5 mg/m³
Pressure for determining piston forces	6.3 bar

Technical data

Piston Ø Piston rod thread Ports Piston rod Ø	16 mm M6 M5 8 mm	20 mm M8 M5 10 mm	25 mm M8 M5 10 mm	32 mm M10x1,25 G 1/8 12 mm	40 mm M10x1,25 G 1/8 12 mm	50 mm M12x1,25 G 1/8 16 mm
Stroke 5	R480668683	R480668692	R480668701	R480668710	R480668723	R480668736
10	R480668684	R480668693	R480668702	R480668711	R480668724	R480668737
15	R480668685	R480668694	R480668703	R480668712	R480668725	R480668738
20	R480668686	R480668695	R480668704	R480668713	R480668726	R480668739
25	R480668687	R480668696	R480668705	R480668714	R480668727	R480668740
30	R480668688	R480668697	R480668706	R480668715	R480668728	R480668741
40	R480668689	R480668698	R480668707	R480668716	R480668729	R480668742
50	R480668690	R480668699	R480668708	R480668717	R480668730	R480668743
60	R480668691	R480668700	R480668709	R480668718	R480668731	R480668744
80	-	-	-	R480668719	R480668732	R480668745
100	-	-	-	R480668720	R480668733	R480668746
125	-	-	-	R480668721	R480668734	R480668747
150	-	-	-	R480668722	R480668735	R480668748

Piston Ø Piston rod thread Ports Piston rod Ø	63 mm M12x1,25 G 1/8 16 mm	80 mm M16x1,5 G 1/8 20 mm	100 mm M16x1,5 G 1/8 25 mm
Stroke 5	R480668749	-	R480668774
10	R480668750	R480668762	R480668775
15	R480668751	R480668763	R480668776
20	R480668752	R480668764	R480668777
25	R480668753	R480668765	R480668778
30	R480668754	R480668766	R480668779
40	R480668755	R480668767	R480668780
50	R480668756	R480668768	R480668781
60	R480668757	R480668769	R480668782
80	R480668758	R480668770	R480668783
100	R480668759	R480668771	R480668784
125	R480668760	R480668772	R480668785
150	R480668761	R480668773	R480668786

Technical data

Piston Ø	16 mm	20 mm	25 mm	32 mm	40 mm	50 mm	63 mm
Retracting piston force	95 N	148 N	260 N	435 N	720 N	1110 N	1837 N
Extracting piston force	127 N	198 N	309 N	507 N	792 N	1237 N	1964 N
Impact energy	0.15 J	0.2 J	0.3 J	0.5 J	0.7 J	1 J	1.3 J
Weight 0 mm stroke	0.084 kg	0.145 kg	0.176 kg	0.309 kg	0.401 kg	0.59 kg	0.801 kg
Weight +10 mm stroke	0.016 kg	0.019 kg	0.021 kg	0.035 kg	0.04 kg	0.055 kg	0.062 kg
Stroke max.	300 mm	300 mm	300 mm	300 mm	300 mm	300 mm	300 mm

Piston Ø	80 mm	100 mm
Retracting piston force	2969 N	4639 N
Extracting piston force	3167 N	4948 N
Impact energy	1.8 J	2.5 J
Weight 0 mm stroke	1.42 kg	2.33 kg
Weight +10 mm stroke	0.087 kg	0.108 kg
Stroke max.	500 mm	500 mm

Technical information

The pressure dew point must be at least 15 °C under ambient and medium temperature and may not exceed 3 °C .
The oil content of compressed air must remain constant during the life cycle.
ATEX-certified cylinders with identification II 2G Ex h IIB T4 Gb / II 2D Ex h IIIB T135°C Db_X can be generated in the Internet configurator.

The material for heat-resistant scraper and seal variants (ambient temperature: -10 °C ... 120 °C) is fluorocaoutchouc.
Further options can be generated in the Internet configurator.
LW*/SW* Hexagonal key required

Technical information

Material	
Cylinder tube	Aluminum, anodized
Piston rod	Stainless steel
Front cover	Aluminum, anodized
End cover	Aluminum, anodized
Scraper	Polyurethane

Dimensions

Dimensions

Ø16 - 63

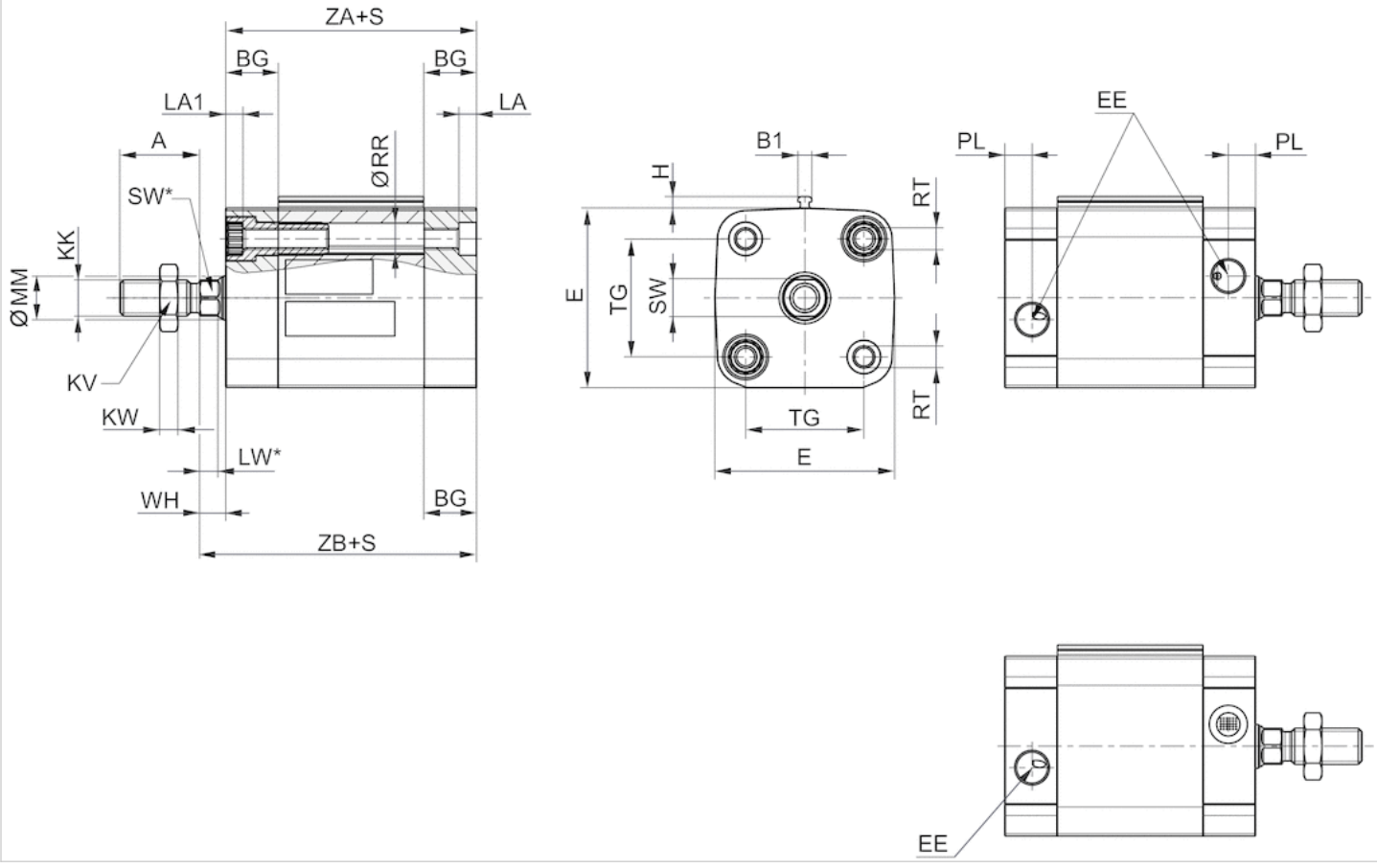

S = stroke

Dimensions

Ø80 - 100

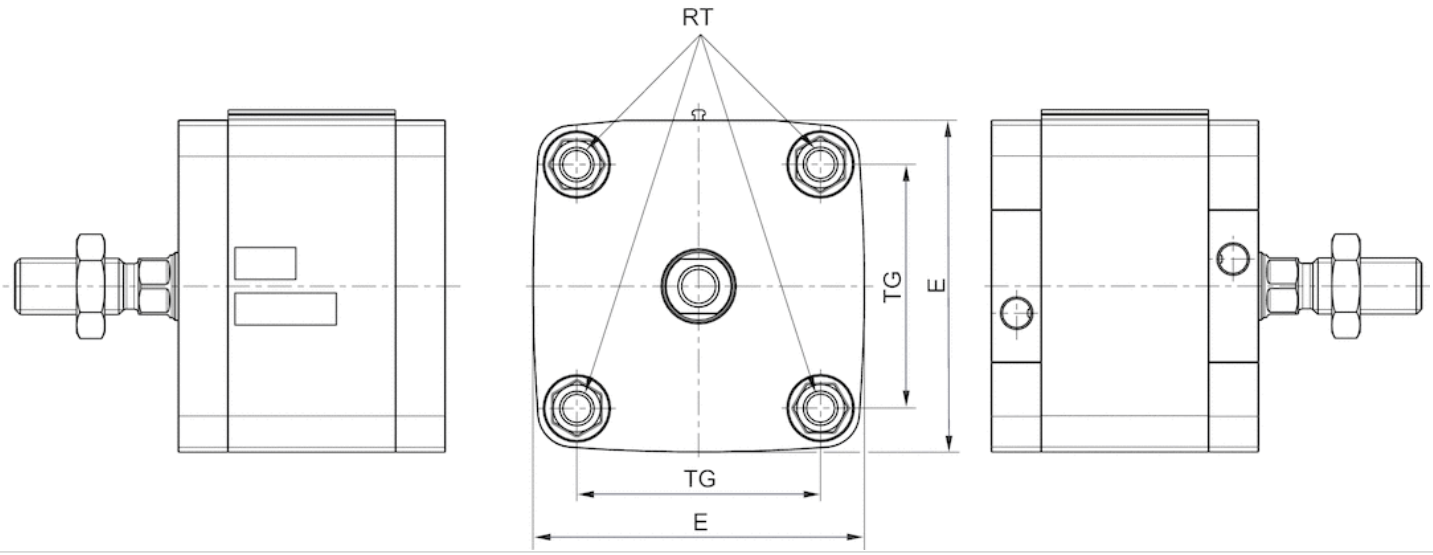

Dimensions

Piston Ø	A	B1	BG min.	E	EE	H	KK	KV	KW	LA	LA1	LW	LW*	MM f8
16 mm	12	3.8	15	29	M5	3.1	M6	10	3.2	3.5	3.5	3.2	3.2	8
20 mm	16	3.8	15	36.5	M5	3.1	M8	13	4	4.8	4.6	3.7	3.7	10
25 mm	16	3.8	15	40.5	M5	3.1	M8	13	4	4.8	4.6	3.7	3.7	10
32 mm	19	3.8	16	49.5	G1/8	3.1	M10x1,25	17	5	4.8	4.8	5	5*	12
40 mm	19	3.8	16	57.5	G1/8	3.1	M10x1,25	17	5	4.8	4.8	5	5*	12
50 mm	22	3.8	16	69.5	G1/8	3.1	M12x1,25	18	6	4.8	4.8	5.7	4,8*	16
63 mm	22	3.8	16	79.5	G1/8	3.1	M12x1,25	18	6	4.8	4.8	5.7	4,8*	16
80 mm	28	3.8	17	98**	ISO 21287: 96	G1/8	M16x1,5	-	24	8	0	0	7	6,4*
100 mm	28	3.8	17	115.5	G1/8	3.1	M16x1,5	24	8	0	0	7.5	6,4*	25

Piston Ø	PL	RR min.	RT	SW	SW*	TG	WH	ZA +S	ZB+S
16 mm	5	3.2	M4	7	7	18 ±0,4	4,8 ±1,4	36	40.8
20 mm	5	4.1	M5	8	8	22 ±0,4	6 ±1,4	37	43
25 mm	5	4.1	M5	8	8	26 ±0,4	6 ±1,4	39	45
32 mm	7.5	5.1	M6	10	10*	32,5 ±0,5	7 ±1,6	44	51
40 mm	7.5	5.1	M6	10	10*	38 ±0,5	7 ±1,6	45	52
50 mm	7.5	6.4	M8	13	13*	46,5 ±0,6	8 ±1,6	45.5	53.5
63 mm	7.5	6.4	M8	13	13*	56,5 ±0,7	8 ±1,6	49	57
80 mm	20	7.5	8.4	M10	16	16*	72 ±0,7	10 ±2	54
100 mm	7.5	8.4	M10	21	21*	89 ±0,7	10 ±2	67	77

Accessories overview

Overview drawing

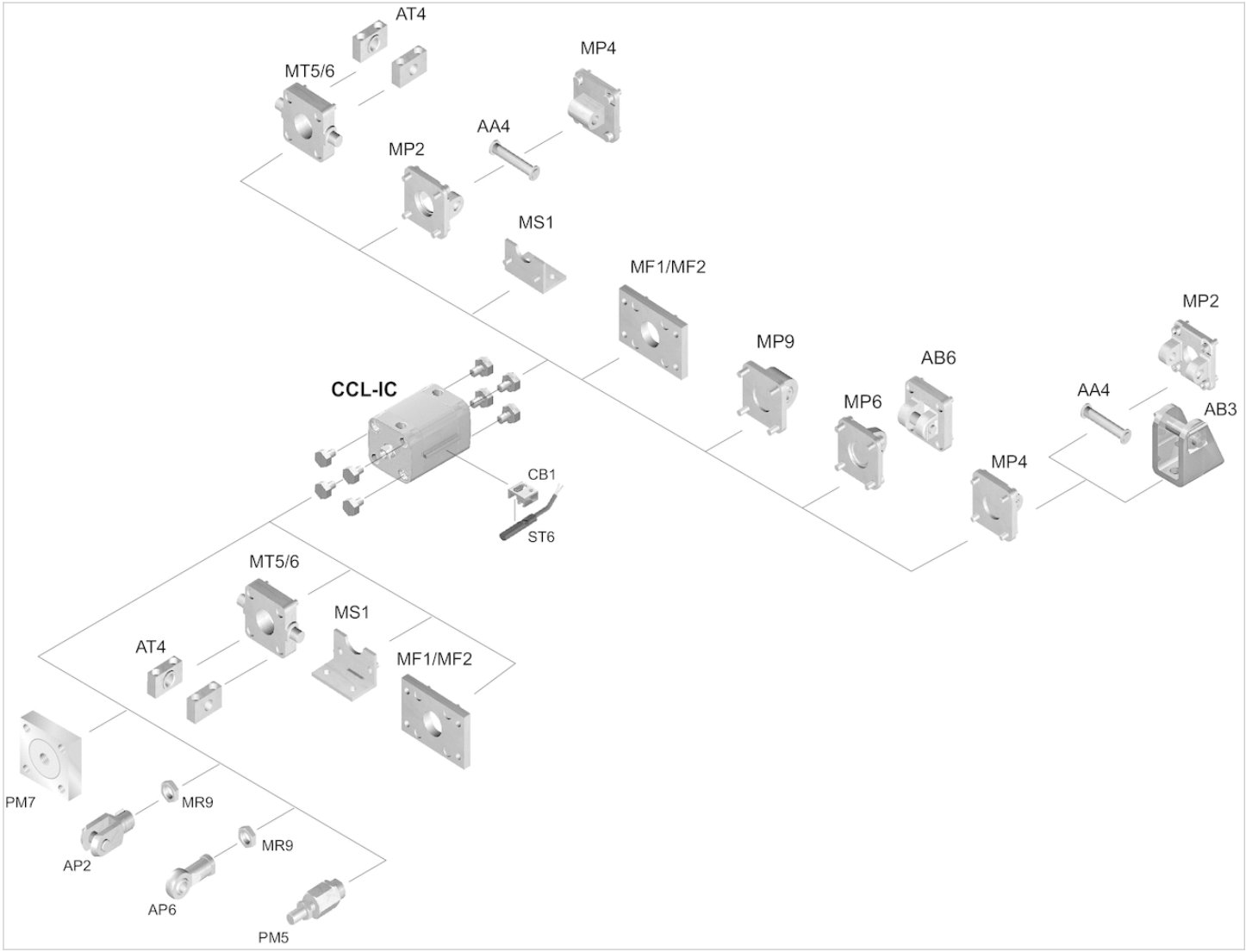

NOTE:
This overview drawing is only for orientation to indicate where the various accessory parts can be fastened to the cylinder. The illustration has been simplified for this purpose. It is thus not possible to derive the dimensions from this overview.

ISO 21287, Series CCL-IC

- Ø 16-100 mm
- Ports M5 G 1/8
- double-acting
- with magnetic piston
- Cushioning elastic
- Piston rod Internal thread
- ATEX optional
- Optionally heat-resistant





Standards	ISO 21287
Certificates	ATEX optional
Compressed air connection	Internal thread
Working pressure min./max.	1 ... 10 bar
Ambient temperature min./max.	-20 ... 80 °C
Medium temperature min./max.	-20 ... 80 °C
Medium	Compressed air
Max. particle size	50 µm
Oil content of compressed air	0 ... 5 mg/m³
Pressure for determining piston forces	6.3 bar

Technical data

Piston Ø Piston rod thread Ports Piston rod Ø	16 mm M4 M5 8 mm	20 mm M6 M5 10 mm	25 mm M6 M5 10 mm	32 mm M8 G 1/8 12 mm	40 mm M8 G 1/8 12 mm	50 mm M10 G 1/8 16 mm
Stroke 5	R480668787	R480668796	R480668805	R480668814	R480668827	R480668840
10	R480668788	R480668797	R480668806	R480668815	R480668828	R480668841
15	R480668789	R480668798	R480668807	R480668816	R480668829	R480668842
20	R480668790	R480668799	R480668808	R480668817	R480668830	R480668843
25	R480668791	R480668800	R480668809	R480668818	R480668831	R480668844
30	R480668792	R480668801	R480668810	R480668819	R480668832	R480668845
40	R480668793	R480668802	R480668811	R480668820	R480668833	R480668846
50	R480668794	R480668803	R480668812	R480668821	R480668834	R480668847
60	R480668795	R480668804	R480668813	R480668822	R480668835	R480668848
80	-	-	-	R480668823	R480668836	R480668849
100	-	-	-	R480668824	R480668837	R480668850
125	-	-	-	R480668825	R480668838	R480668851
150	-	-	-	R480668826	R480668839	R480668852

Piston Ø Piston rod thread Ports Piston rod Ø	63 mm M10 G 1/8 16 mm	80 mm M12 G 1/8 20 mm	100 mm M12 G 1/8 25 mm
Stroke 5	R480668853	-	R480668878
10	R480668854	R480668866	R480668879
15	R480668855	R480668867	R480668880
20	R480668856	R480668868	R480668881
25	R480668857	R480668869	R480668882
30	R480668858	R480668870	R480668883
40	R480668859	R480668871	R480668884
50	R480668860	R480668872	R480668885
60	R480668861	R480668873	R480668886
80	R480668862	R480668874	R480668887
100	R480668863	R480668875	R480668888
125	R480668864	R480668876	R480668889
150	R480668865	R480668877	R480668890

Technical data

Piston Ø	16 mm	20 mm	25 mm	32 mm	40 mm	50 mm	63 mm
Retracting piston force	95 N	148 N	260 N	435 N	720 N	1110 N	1837 N
Extracting piston force	127 N	198 N	309 N	507 N	792 N	1237 N	1964 N
Impact energy	0.15 J	0.2 J	0.3 J	0.5 J	0.7 J	1 J	1.3 J
Weight 0 mm stroke	0.079 kg	0.119 kg	0.15 kg	0.286 kg	0.378 kg	0.551 kg	0.762 kg
Weight +10 mm stroke	0.016 kg	0.019 kg	0.021 kg	0.035 kg	0.04 kg	0.055 kg	0.062 kg
Stroke max.	300 mm	300 mm	300 mm	300 mm	300 mm	300 mm	300 mm

Piston Ø	80 mm	100 mm
Retracting piston force	2969 N	4639 N
Extracting piston force	3167 N	4948 N
Impact energy	1.8 J	2.5 J
Weight 0 mm stroke	1.34 kg	2.25 kg
Weight +10 mm stroke	0.087 kg	0.108 kg
Stroke max.	500 mm	500 mm

Technical information

The pressure dew point must be at least 15 °C under ambient and medium temperature and may not exceed 3 °C .
The oil content of compressed air must remain constant during the life cycle.
ATEX-certified cylinders with identification II 2G Ex h IIB T4 Gb / II 2D Ex h IIIB T135°C Db_X can be generated in the Internet configurator.

The material for heat-resistant scraper and seal variants (ambient temperature: -10 °C ... 120 °C) is fluorocaoutchouc.
Further options can be generated in the Internet configurator.

Technical information

Material	
Cylinder tube	Aluminum, anodized
Piston rod	Stainless steel
Front cover	Aluminum, anodized
End cover	Aluminum, anodized
Scraper	Polyurethane

Dimensions

Dimensions

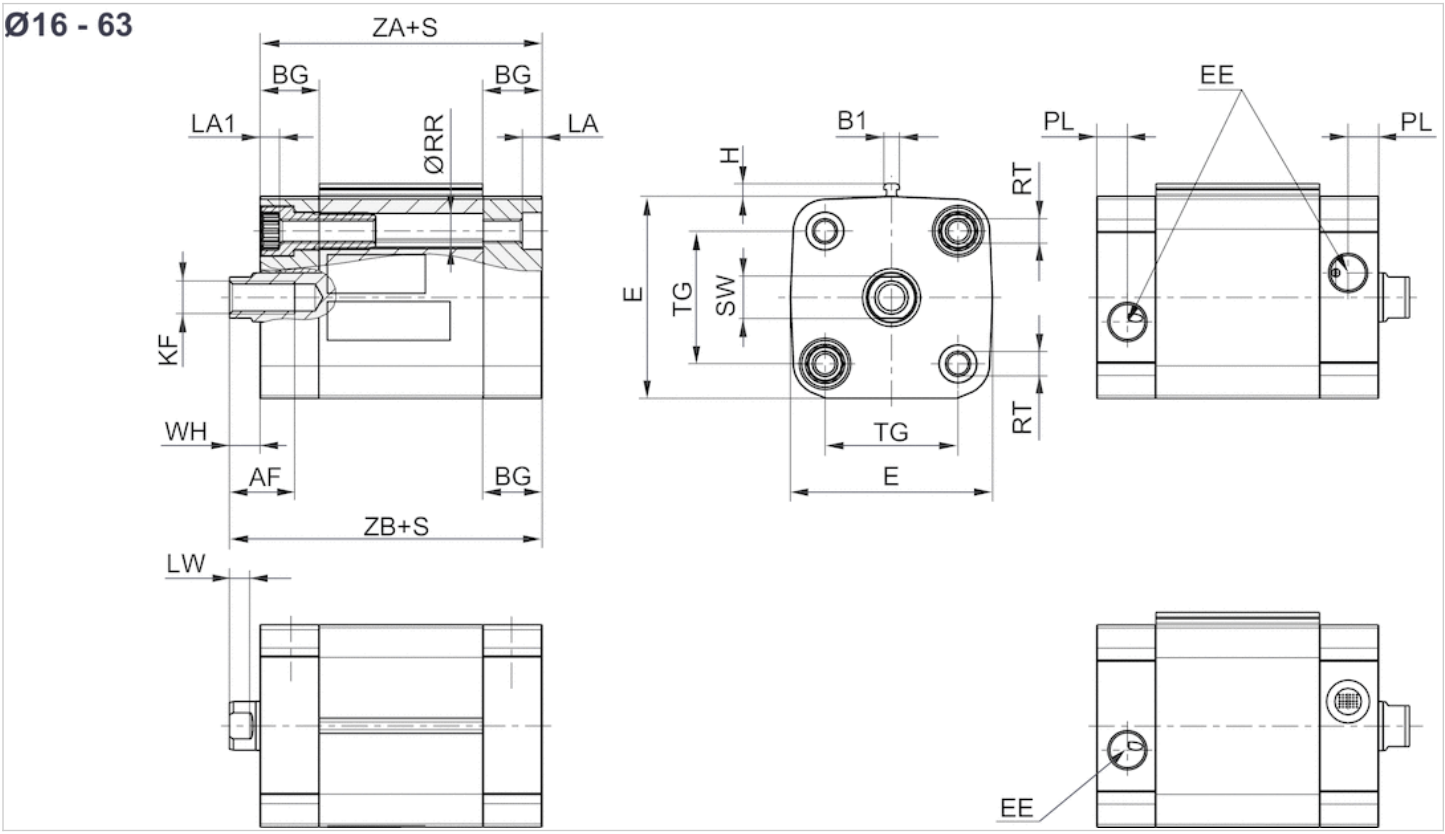

S = stroke

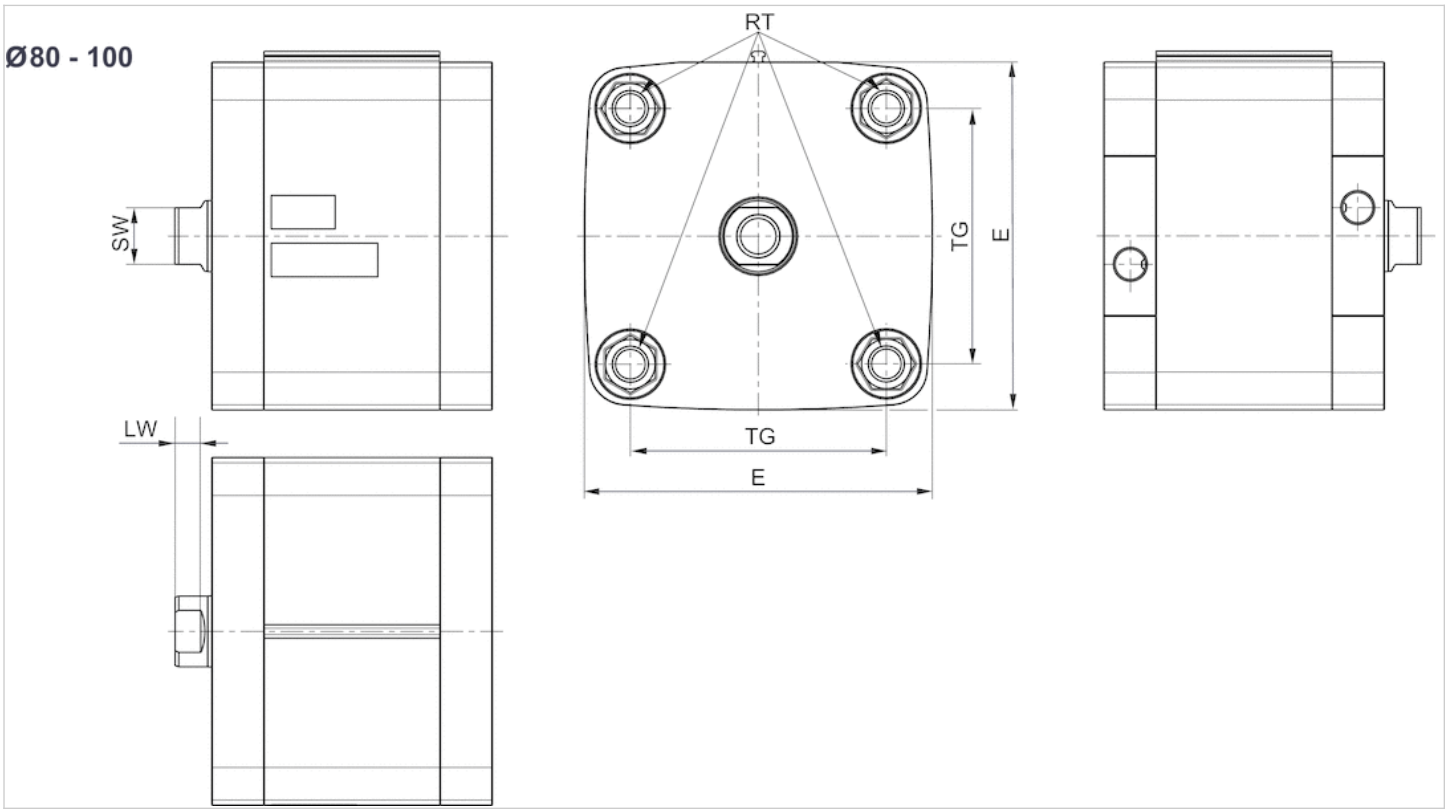

Dimensions

Piston Ø	AF	B1	BG min.	E** ISO 21287: 96	EE	H	KF	LA	LA1	LW	PL	RR min.	RT	SW
16 mm	10	3.8	15	29	M5	3.1	M4	3.5	3.5	3.2	5	3.2	M4	7
20 mm	10	3.8	15	36.5	M5	3.1	M6	4.8	4.6	3.7	5	4.1	M5	8
25 mm	10	3.8	15	40.5	M5	3.1	M6	4.8	4.6	3.7	5	4.1	M5	8
32 mm	12	3.8	16	49.5	G1/8	3.1	M8	4.8	4.8	5	7.5	5.1	M6	10
40 mm	12	3.8	16	57.5	G1/8	3.1	M8	4.8	4.8	5	7.5	5.1	M6	10
50 mm	16	3.8	16	69.5	G1/8	3.1	M10	4.8	4.8	5.7	7.5	6.4	M8	13
63 mm	16	3.8	16	79.5	G1/8	3.1	M10	4.8	4.8	5.7	7.5	6.4	M8	13
80 mm	20	3.8	17	98**	G1/8	3.1	M12	0	0	7	7.5	8.4	M10	16
100 mm	20	3.8	17	115.5	G1/8	3.1	M12	0	0	7.5	7.5	8.4	M10	21

Piston Ø	TG	WH	ZA +S	ZB +S
16 mm	18 ±0,4	4,8 ±1,4	36	40.8
20 mm	22 ±0,4	6 ±1,4	37	43
25 mm	26 ±0,4	6 ±1,4	39	45
32 mm	32,5 ±0,5	7 ±1,6	44	51
40 mm	38 ±0,5	7 ±1,6	45	52
50 mm	46,5 ±0,6	8 ±1,6	45.5	53.5
63 mm	56,5 ±0,7	8 ±1,6	49	57
80 mm	72 ±0,7	10 ±2	54	64
100 mm	89 ±0,7	10 ±2	67	77

Accessories overview

Overview drawing

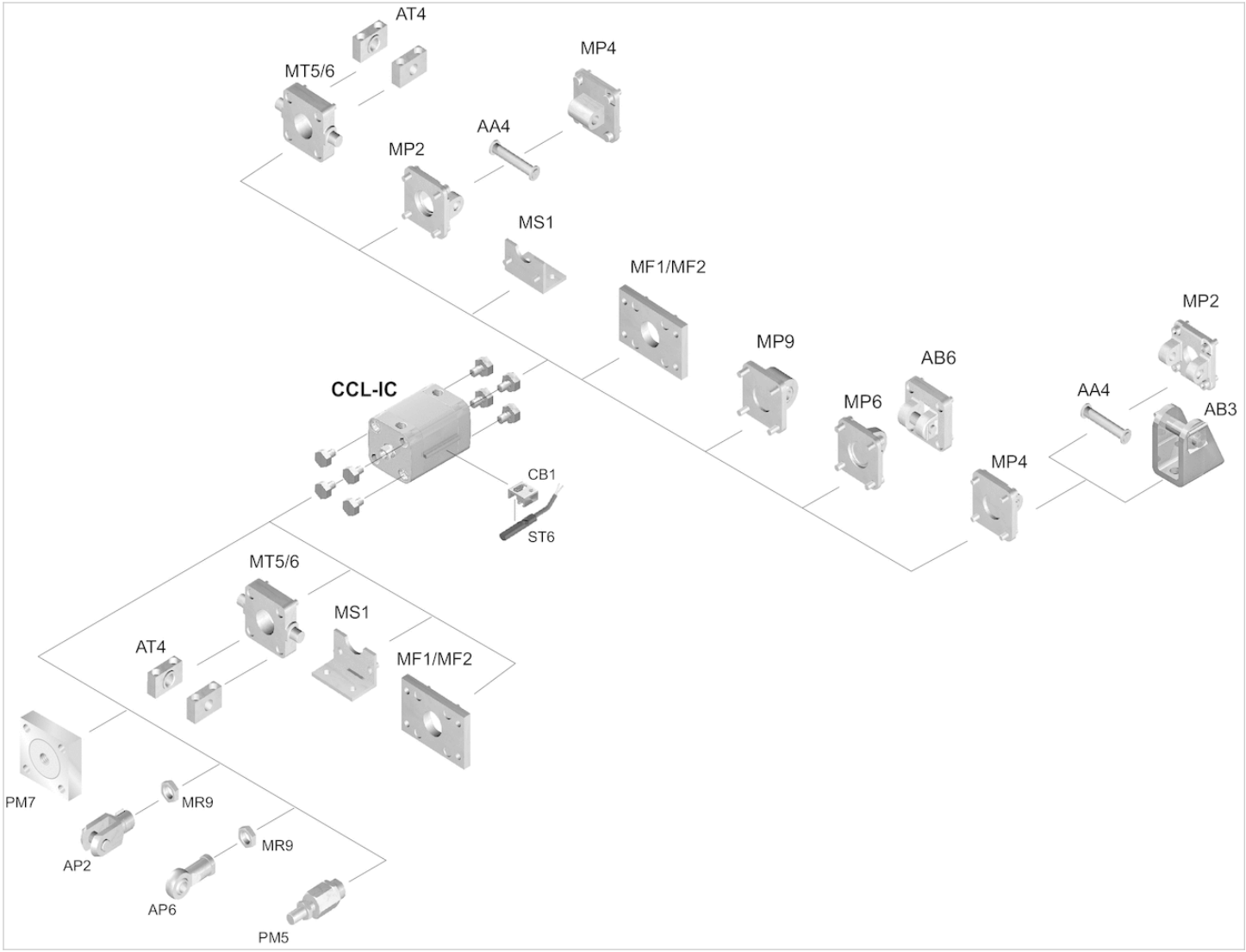

NOTE:
This overview drawing is only for orientation to indicate where the various accessory parts can be fastened to the cylinder. The illustration has been simplified for this purpose. It is thus not possible to derive the dimensions from this overview.

ISO 21287, Series CCL-IC

- Ø 16-63 mm
- Ports M5 G 1/8
- Single-acting, retracted without pressure
- with magnetic piston
- Cushioning elastic
- Piston rod External thread



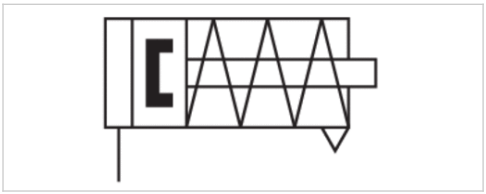

Standards	ISO 21287
Compressed air connection	Internal thread
Working pressure min./max.	1 ... 10 bar
Ambient temperature min./max.	-20 ... 80 °C
Medium temperature min./max.	-20 ... 80 °C
Medium	Compressed air
Max. particle size	50 µm
Oil content of compressed air	0 ... 5 mg/m³
Pressure for determining piston forces	6.3 bar

Technical data

Piston Ø Piston rod thread Ports Piston rod Ø	16 mm M6 M5 8 mm	20 mm M8 M5 10 mm	25 mm M8 M5 10 mm	32 mm M10x1,25 G 1/8 12 mm	40 mm M10x1,25 G 1/8 12 mm	50 mm M12x1,25 G 1/8 16 mm
Stroke 5	R480668891	R480668896	R480668901	R480668906	R480668911	R480668916
10	R480668892	R480668897	R480668902	R480668907	R480668912	R480668917
15	R480668893	R480668898	R480668903	R480668908	R480668913	R480668918
20	R480668894	R480668899	R480668904	R480668909	R480668914	R480668919
25	R480668895	R480668900	R480668905	R480668910	R480668915	R480668920

Piston Ø Piston rod thread Ports Piston rod Ø	63 mm M12x1,25 G 1/8 16 mm
Stroke 5	R480668921
10	R480668922
15	R480668923
20	R480668924
25	R480668925

Technical data

Piston Ø	16 mm	20 mm	25 mm	32 mm	40 mm	50 mm
Retracting piston force	12 N	13 N	25 N	35 N	43 N	82 N
Extracting piston force	115 N	185 N	284 N	472 N	749 N	1155 N
Spring force min. - max.	12 N	13 N	25 N	35 N	43 N	82 N
Impact energy	0.11 J	0.15 J	0.2 J	0.4 J	0.52 J	0.64 J
Weight 0 mm stroke	0.085 kg	0.146 kg	0.178 kg	0.313 kg	0.406 kg	0.602 kg
Weight +10 mm stroke	0.016 kg	0.019 kg	0.021 kg	0.035 kg	0.04 kg	0.055 kg
Stroke max.	25 mm	25 mm	25 mm	25 mm	25 mm	25 mm

Piston Ø	63 mm
Retracting piston force	82 N
Extracting piston force	1882 N
Spring force min. - max.	82 N
Impact energy	0.75 J
Weight 0 mm stroke	0.814 kg
Weight +10 mm stroke	0.062 kg
Stroke max.	25 mm

Technical information

The pressure dew point must be at least 15 °C under ambient and medium temperature and may not exceed 3 °C .

Further options can be generated in the Internet configurator.
LW*/SW* Hexagonal key required

Technical information

Material	
Cylinder tube	Aluminum, anodized
Piston rod	Stainless steel
Front cover	Aluminum, anodized
End cover	Aluminum, anodized
Scraper	Polyurethane

Dimensions

Dimensions

Ø16 - 63

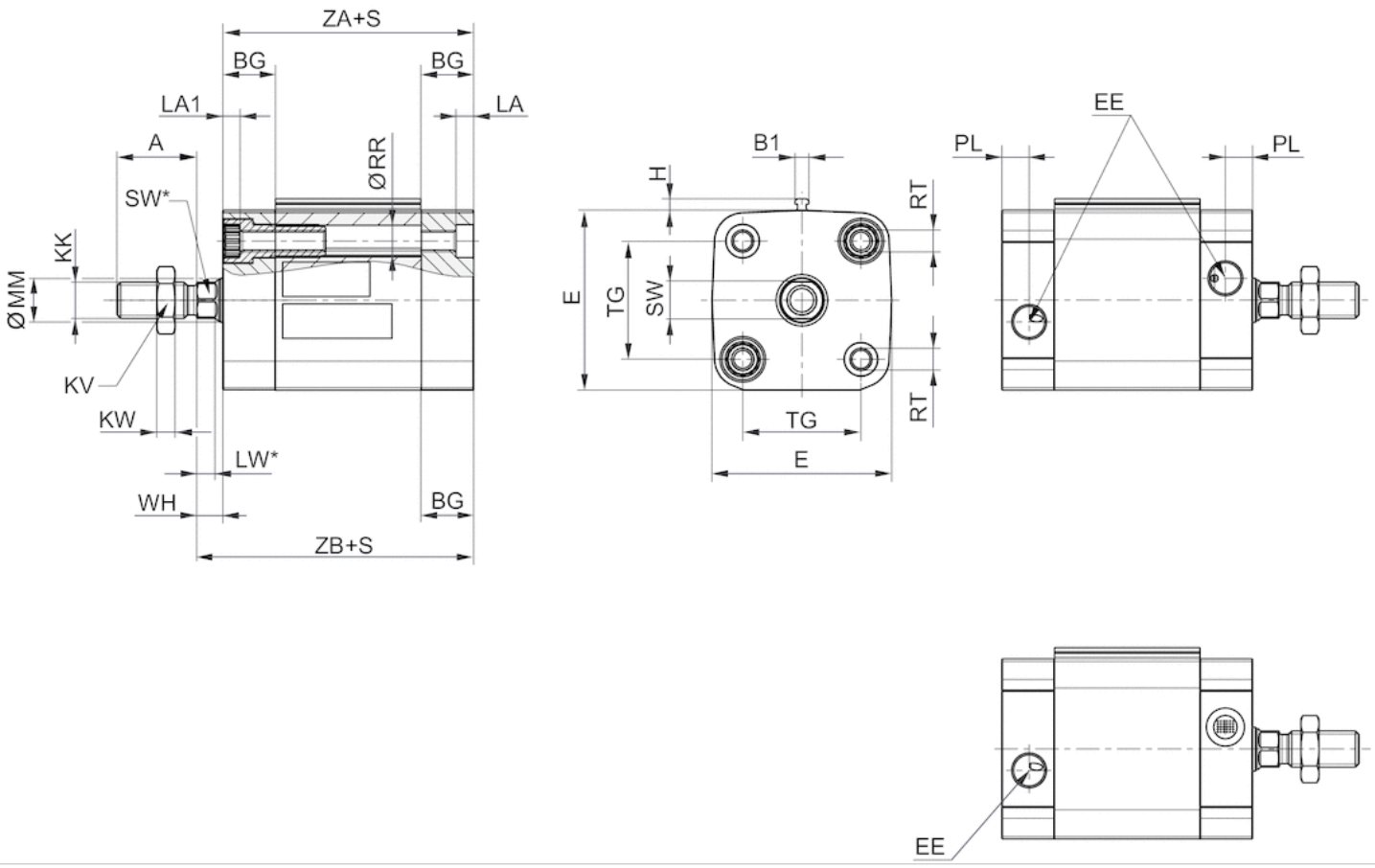

S = stroke

Dimensions

Piston Ø	A	B1	BG min.	E	EE	H	KK	KV	KW	LA	LA1	LW	LW*	MM f8	PL	RR min.
16 mm	12	3.8	15	29	M5	3.1	M6	10	3.2	3.5	3.5	3.2	3.2	8	5	3.2
20 mm	16	3.8	15	36.5	M5	3.1	M8	13	4	4.8	4.6	3.7	3.7	10	5	4.1
25 mm	16	3.8	15	40.5	M5	3.1	M8	13	4	4.8	4.6	3.7	3.7	10	5	4.1
32 mm	19	3.8	16	49.5	G1/8	3.1	M10x1,25	17	5	4.8	4.8	5	5*	12	7.5	5.1
40 mm	19	3.8	16	57.5	G1/8	3.1	M10x1,25	17	5	4.8	4.8	5	5*	12	7.5	5.1
50 mm	22	3.8	16	69.5	G1/8	3.1	M12x1,25	18	6	4.8	4.8	5.7	4,8*	16	7.5	6.4
63 mm	22	3.8	16	79.5	G1/8	3.1	M12x1,25	18	6	4.8	4.8	5.7	4,8*	16	7.5	6.4

Piston Ø	RT	SW	SW*	TG	WH	ZA +S	ZB+S
16 mm	M4	7	7	18 ±0,4	4,8 ±1,4	36	40.8
20 mm	M5	8	8	22 ±0,4	6 ±1,4	37	43
25 mm	M5	8	8	26 ±0,4	6 ±1,4	39	45
32 mm	M6	10	10*	32,5 ±0,5	7 ±1,6	44	51
40 mm	M6	10	10*	38 ±0,5	7 ±1,6	45	52
50 mm	M8	13	13*	46,5 ±0,6	8 ±1,6	45.5	53.5

Piston Ø	RT	SW	SW*	TG	WH	ZA +S	ZB+S
63 mm	M8	13	13*	56,5 ±0,7	8 ±1,6	49	57

Diagrams

Extracting piston force

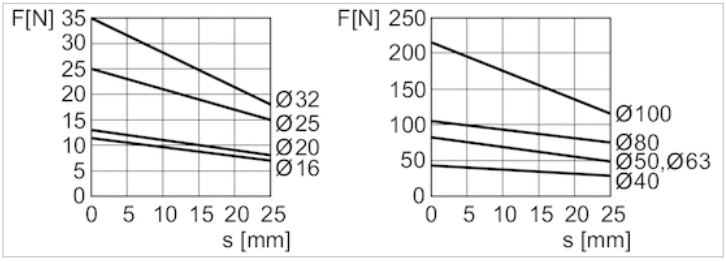

F = spring return force, s = return stroke

Accessories overview

Overview drawing

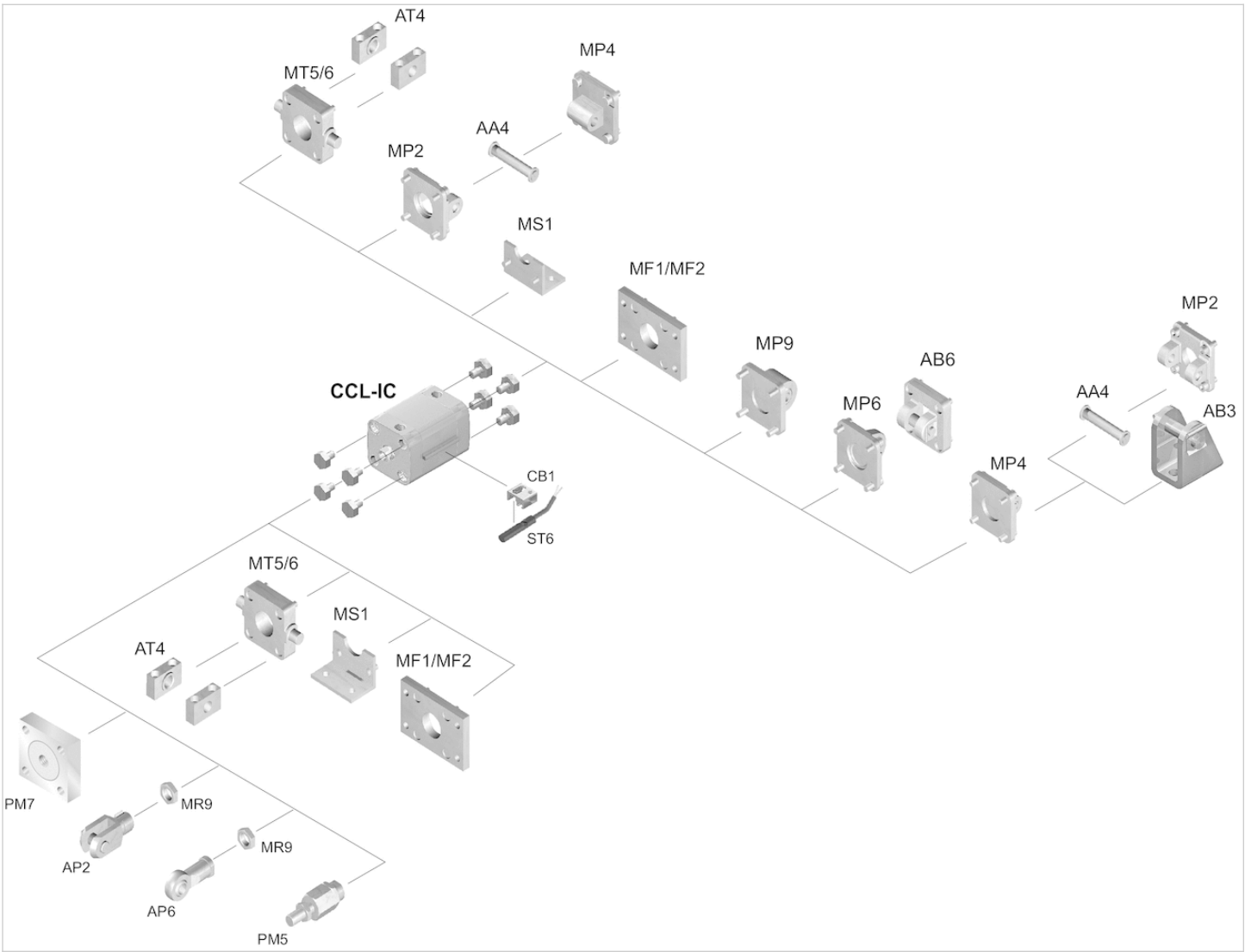

NOTE:
This overview drawing is only for orientation to indicate where the various accessory parts can be fastened to the cylinder. The

illustration has been simplified for this purpose. It is thus not possible to derive the dimensions from this overview.

ISO 21287, Series CCL-IC

- Ø 16-63 mm
- Ports M5 G 1/8
- Single-acting, retracted without pressure
- with magnetic piston
- Cushioning elastic
- Piston rod Internal thread



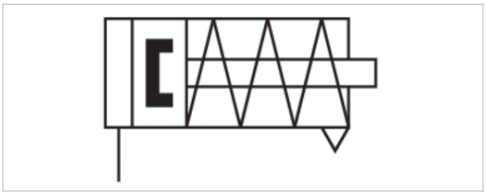

Standards	ISO 21287
Compressed air connection	Internal thread
Working pressure min./max.	1 ... 10 bar
Ambient temperature min./max.	-20 ... 80 °C
Medium temperature min./max.	-20 ... 80 °C
Medium	Compressed air
Max. particle size	50 µm
Oil content of compressed air	0 ... 5 mg/m³
Pressure for determining piston forces	6.3 bar

Technical data

Piston Ø Piston rod thread Ports Piston rod Ø	16 mm M4 M5 8 mm	20 mm M6 M5 10 mm	25 mm M6 M5 10 mm	32 mm M8 G 1/8 12 mm	40 mm M8 G 1/8 12 mm	50 mm M10 G 1/8 16 mm
Stroke 5	R480668926	R480668931	R480668936	R480668941	R480668946	R480668951
10	R480668927	R480668932	R480668937	R480668942	R480668947	R480668952
15	R480668928	R480668933	R480668938	R480668943	R480668948	R480668953
20	R480668929	R480668934	R480668939	R480668944	R480668949	R480668954
25	R480668930	R480668935	R480668940	R480668945	R480668950	R480668955

Piston Ø Piston rod thread Ports Piston rod Ø	63 mm M10 G 1/8 16 mm
Stroke 5	R480668956
10	R480668957
15	R480668958
20	R480668959
25	R480668960

Technical data

Piston Ø	16 mm	20 mm	25 mm	32 mm	40 mm	50 mm
Retracting piston force	12 N	13 N	25 N	35 N	43 N	82 N
Extracting piston force	115 N	185 N	284 N	472 N	749 N	1155 N
Spring force min. - max.	12 N	13 N	25 N	35 N	43 N	82 N
Impact energy	0.11 J	0.15 J	0.2 J	0.4 J	0.52 J	0.64 J
Weight 0 mm stroke	0.08 kg	0.12 kg	0.152 kg	0.29 kg	0.383 kg	0.563 kg
Weight +10 mm stroke	0.016 kg	0.019 kg	0.021 kg	0.035 kg	0.04 kg	0.055 kg
Stroke max.	25 mm	25 mm	25 mm	25 mm	25 mm	25 mm

Piston Ø	63 mm
Retracting piston force	82 N
Extracting piston force	1882 N
Spring force min. - max.	82 N
Impact energy	0.75 J
Weight 0 mm stroke	0.775 kg
Weight +10 mm stroke	0.062 kg
Stroke max.	25 mm

Technical information

The pressure dew point must be at least 15 °C under ambient and medium temperature and may not exceed 3 °C .

Further options can be generated in the Internet configurator.

Technical information

Material	
Cylinder tube	Aluminum, anodized
Piston rod	Stainless steel
Front cover	Aluminum, anodized
End cover	Aluminum, anodized
Scraper	Polyurethane

Dimensions

Dimensions

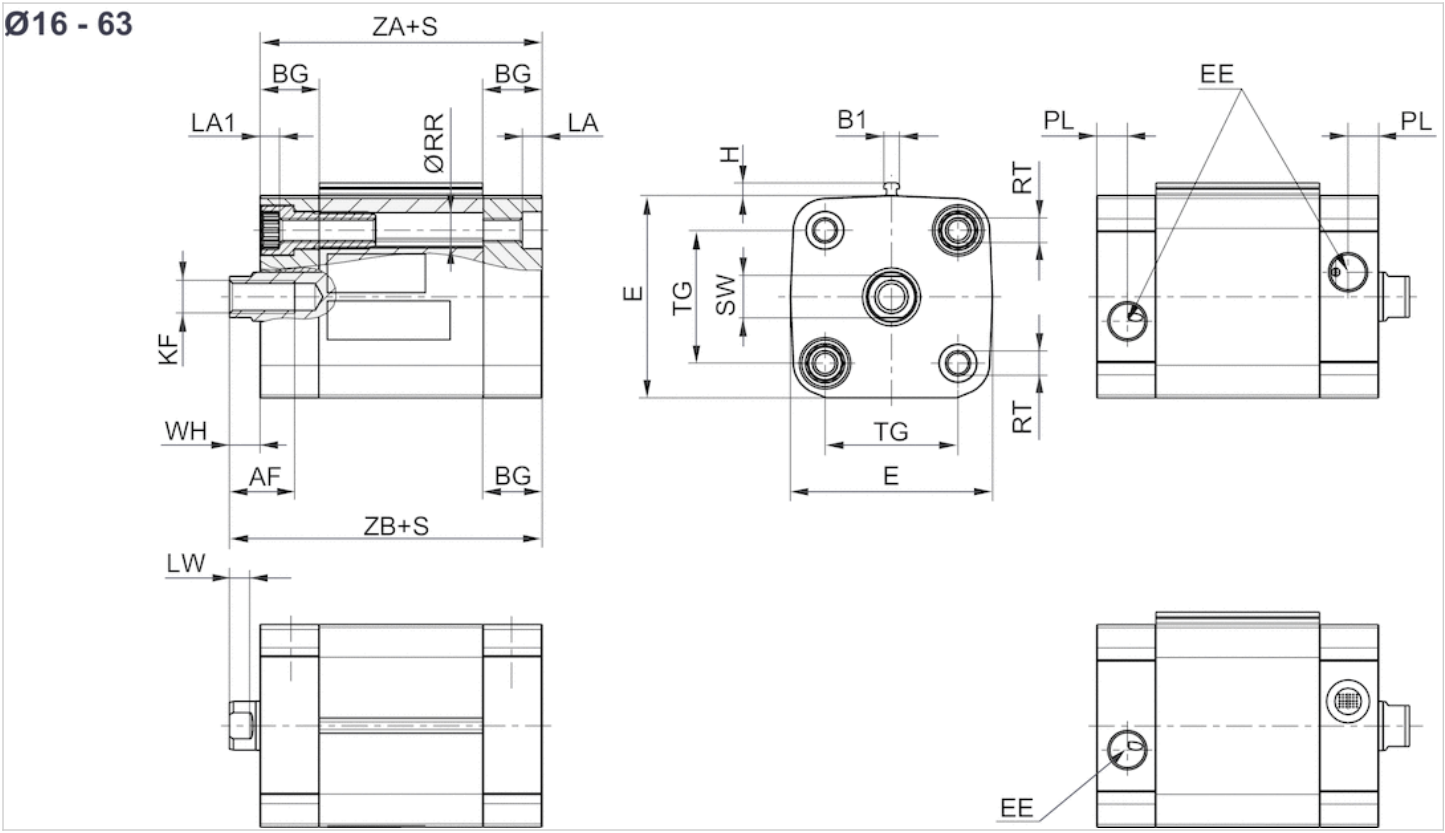

S = stroke

Dimensions

Piston Ø	AF	B1	BG min.	E	EE	H	KF	LA	LA1	LW	PL	RR min.	RT	SW	TG	WH
16 mm	10	3.8	15	29	M5	3.1	M4	3.5	3.5	3.2	5	3.2	M4	7	18 ±0,5	4.8 ±1,4
20 mm	10	3.8	15	36.5	M5	3.1	M6	4.8	4.6	3.7	5	4.1	M5	8	22 ±0,4	6 ±1,4
25 mm	10	3.8	15	40.5	M5	3.1	M6	4.8	4.6	3.7	5	4.1	M5	8	26 ±0,4	6 ±1,4
32 mm	12	3.8	16	49.5	G1/8	3.1	M8	4.8	4.8	5	7.5	5.1	M6	10	32.5 ±0,5	7 ±1,6
40 mm	12	3.8	16	57.5	G1/8	3.1	M8	4.8	4.8	5	7.5	5.1	M6	10	38 ±0,5	7 ±1,6
50 mm	16	3.8	16	69.5	G1/8	3.1	M10	4.8	4.8	5.7	7.5	6.4	M8	13	46.5 ±0,5	8 ±1,6
63 mm	16	3.8	16	79.5	G1/8	3.1	M10	4.8	4.8	5.7	7.5	6.4	M8	13	56.5 ±0,5	8 ±1,6

Piston Ø	ZA+S	ZB+S
16 mm	36	40.8
20 mm	37	43
25 mm	39	45
32 mm	44	51
40 mm	45	52
50 mm	45.5	53.5
63 mm	49	57

Diagrams

Extracting piston force

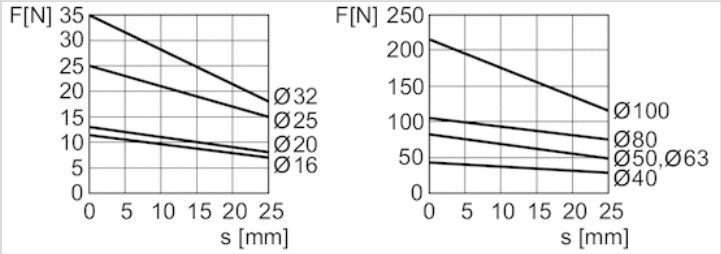

F = spring return force, s = return stroke

Accessories overview

Overview drawing

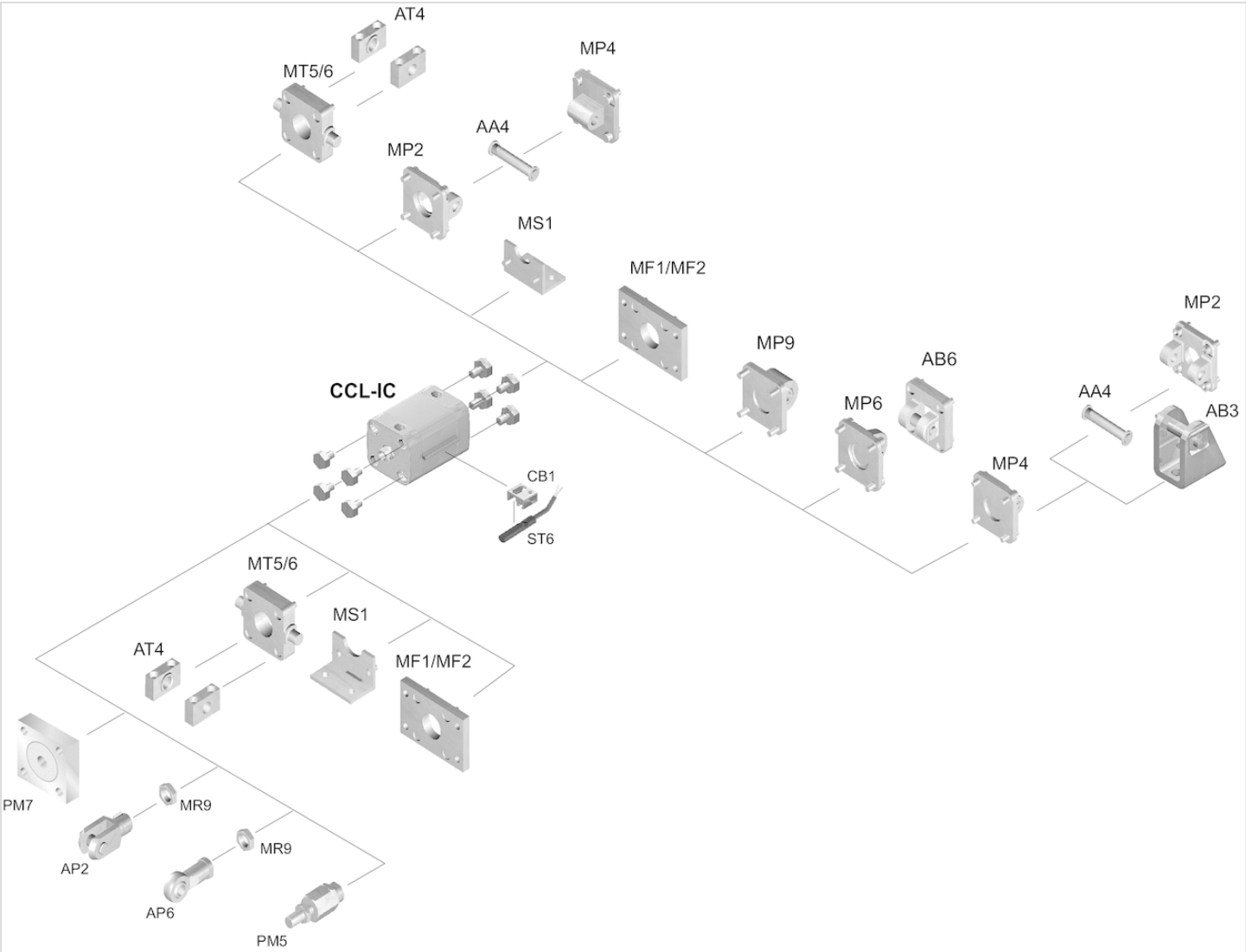

NOTE:
This overview drawing is only for orientation to indicate where the various accessory parts can be fastened to the cylinder. The illustration has been simplified for this purpose. It is thus not possible to derive the dimensions from this overview.

Clevis mounting AB6, Series CM1

- Cylinder mounting in accordance with ISO 15552
- Suitable piston Ø 32 40 50 63 80 100 mm



Standards ISO 15552

Technical data

Part No.	Piston Ø	Swivel bearing Ø
1827001593	32 mm	10 mm
1827001594	40 mm	12 mm
1827001595	50 mm	16 mm
1827002024	63 mm	16 mm
1827001597	80 mm	20 mm
1827001598	100 mm	20 mm

Scope of delivery: clevis mounting incl. pivot pins and mounting screws

Technical information

Material	
Material	Aluminum (forged)
Screws	Steel
	galvanized

Dimensions

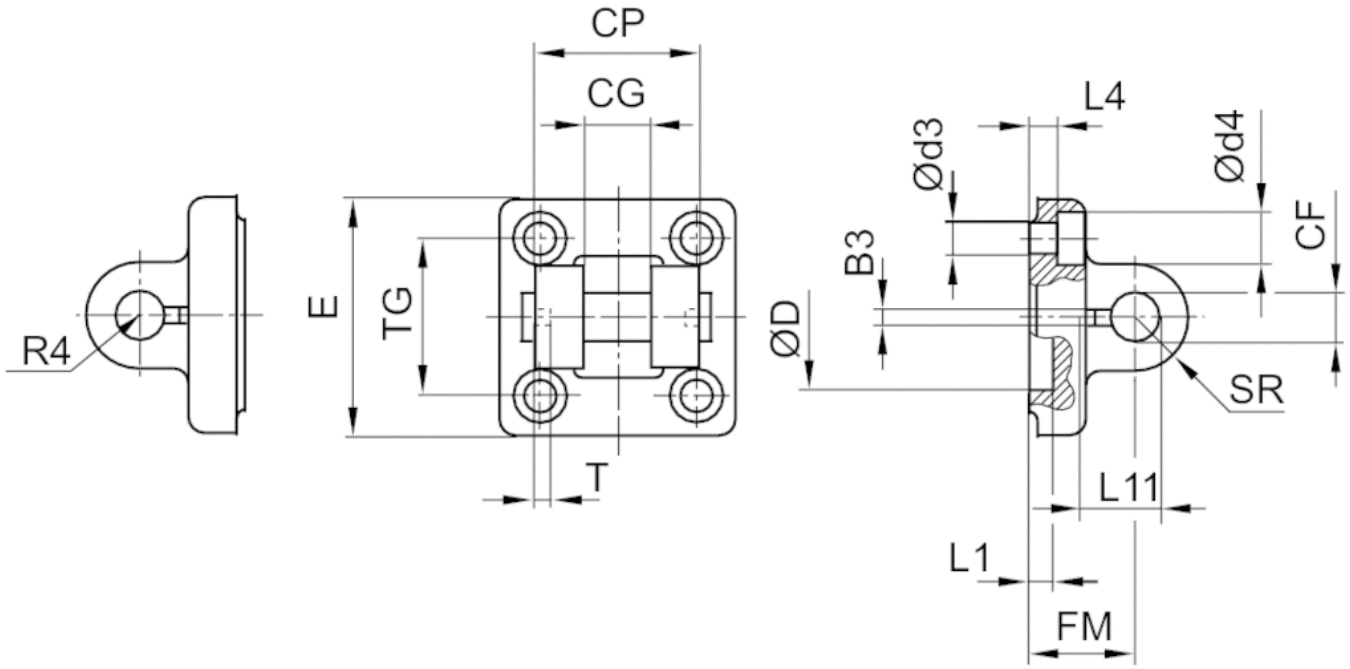

Dimensions

Part No.	Piston Ø	B3 ±0,2	Ø CF F7	CG D10	CP d12	Ø d3	Ø d4	Ø D	E	FM ±0,2
1827001593	32 mm	3.3	10	14	34	6.6	11	30	49	22
1827001594	40 mm	4.3	12	16	40	6.6	11	35	55	25
1827001595	50 mm	4.3	16	21	45	9	15	40	67	27
1827002024	63 mm	4.3	16	21	51	9	15	45	77	32
1827001597	80 mm	4.3	20	25	65	11	18	45	97	36
1827001598	100 mm	4.3	20	25	75	11	18	55	117	41

L1 min.	L4 ±0,5	L11 –0,5	R4	SR	T ±0,2	TG
4.5	5.5	16.5	17	11	3	32,5 ±0,2
4.5	5.5	18	20	12	4	38 ±0,2
4.5	6.5	23	22	15	4	46,5 ±0,2
4.5	6.5	23	25	15	4	56,5 ±0,2
4.5	10	27	30	20	4	72 ±0,2
4.5	10	27	32	20	4	89 ±0,2

Clevis mounting AB3, Series CM1

- Suitable piston Ø 12, 16 20, 25 32 mm



The delivered product may vary from that in the illustration.

Technical data

Part No.	Piston Ø	Swivel bearing Ø	Fig.
3323416000	12, 16 mm	6 mm	Fig. 2
3323420000	20, 25 mm	8 mm	Fig. 2
3323432000	32 mm	10 mm	Fig. 1

Scope of delivery: clevis mounting incl. pivot pins

Technical information

Material	
Material	Stainless steel

Dimensions

Fig. 1

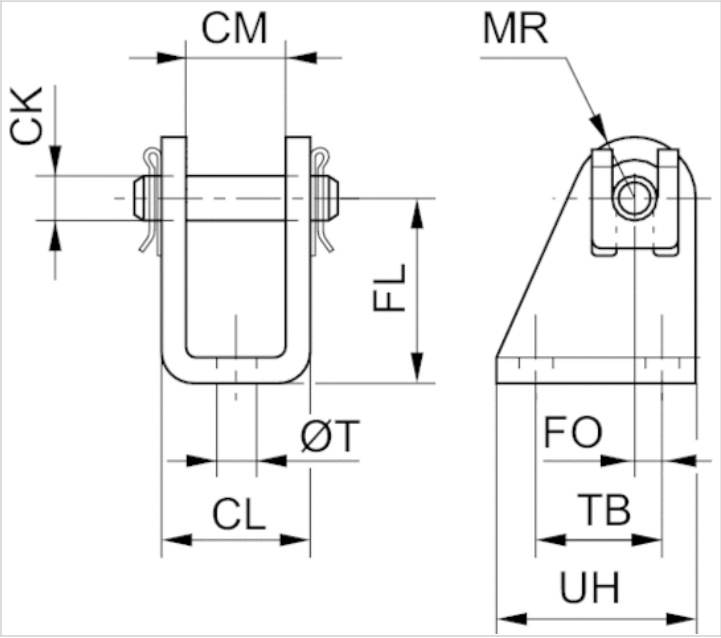

Fig. 2

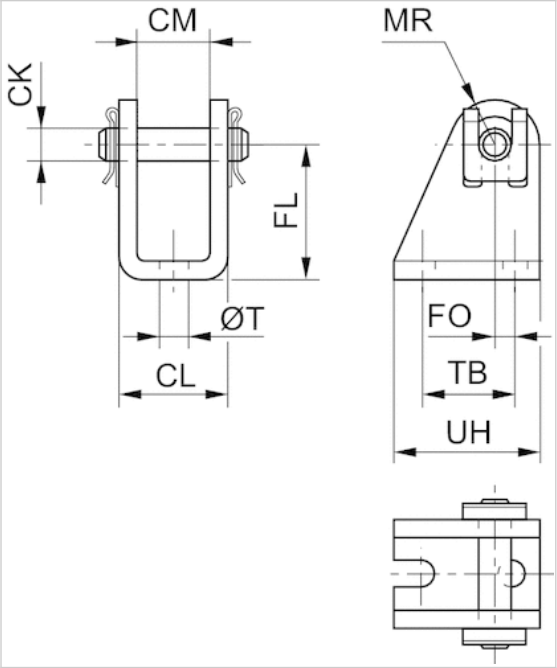

Dimensions

Part No.	Piston Ø	Fig.	CM	Ø CK	CL	FL	FO	MR	Ø T	TB	UH
3323416000	12, 16 mm	Fig. 2	12	6	18	27	2,0	7	5.5	15	25
3323420000	20, 25 mm	Fig. 2	16	8	24	30	4,0	10	6.6	22	34
3323432000	32 mm	Fig. 1	26	10	36	32	6,0	12	6.6	24	36

Clevis mounting MP2, Series CM1

- corrosion-resistant
- Cylinder mounting in accordance with ISO 15552
- Suitable piston Ø 32 40 50 63 80 100 mm



Standards	ISO 15552
Weight	See table below

Technical data

Part No.	Piston Ø	Swivel bearing Ø	Weight
3682903590	32 mm	10 mm	0.107 kg
3682904590	40 mm	12 mm	0.157 kg
3682905590	50 mm	12 mm	0.232 kg
3682906590	63 mm	16 mm	0.345 kg
3682908590	80 mm	16 mm	0.574 kg
3682910590	100 mm	20 mm	0.88 kg

Scope of delivery: clevis mounting incl. pivot pins and mounting screws

Technical information

Material	
Material	Aluminum (forged)
	anodized
Screws	Stainless steel
Bearing	Plastic

Dimensions

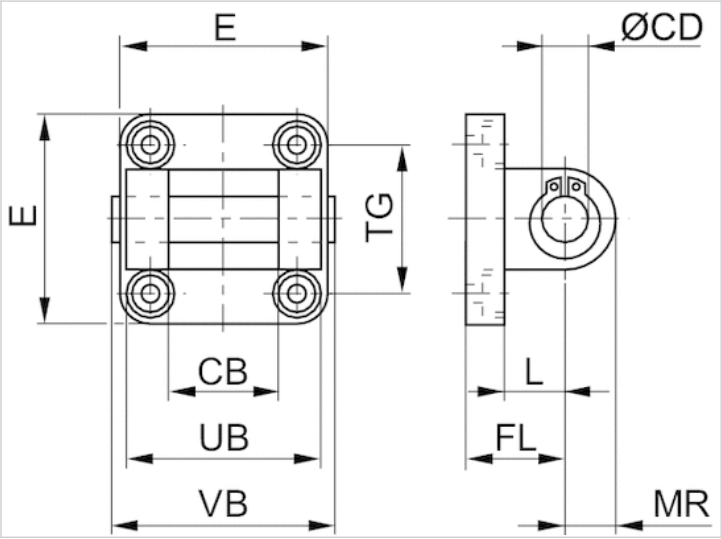

Dimensions

Part No.	CB H14	Ø CD H9	E max.	FL	L min.	MR	UB h14	VB	TG
3682903590	26	10	47	22 ±0,2	12	10	45	50	32,5 ±0,2
3682904590	28	12	54	25 ±0,2	15	12	52	57	38,0 ±0,2
3682905590	32	12	65	27 ±0,2	15	12	60	65	46,5 ±0,2
3682906590	40	16	75	32 ±0,2	20	15	70	76	56,5 ±0,2
3682908590	50	16	94	36 ±0,2	20	17	90	96	72,0 ±0,2
3682910590	60	20	112	41 ±0,2	25	21	110	117	89,0 ±0,2

Rear eye MP4-HD, Series CM1

- Suitable for robust mechanical engineering applications■for clevis mounting MP2 and AB3
- Cylinder mounting in accordance with ISO 21287 ISO 15552
- Suitable piston Ø 16 20 25 32 40 50 63 80 100 mm



Standards See table below

Technical data

Part No.	Piston Ø	Swivel bearing Ø	Standardization	Housing material	Surface
1825805368	16 mm	6 mm	-	Die-cast aluminum	-
1827002300	20 mm	8 mm	ISO 21287	Steel	galvanized
1827002301	25 mm	8 mm	ISO 21287	Steel	galvanized
1827001283	32 mm	10 mm	ISO 15552	Aluminum (forged)	-
1827001284	40 mm	12 mm	ISO 15552	Aluminum (forged)	-
1827001285	50 mm	12 mm	ISO 15552	Aluminum (forged)	-
1827020086	63 mm	16 mm	ISO 15552	Aluminum (forged)	-
1827001287	80 mm	16 mm	ISO 15552	Aluminum (forged)	-
1827001288	100 mm	20 mm	ISO 15552	Aluminum (forged)	-

Scope of delivery: clevis incl. mounting screws

Technical information

Material	
Material	Die-cast aluminum Steel Aluminum (forged)
	galvanized
Screws	Steel
	galvanized

Dimensions

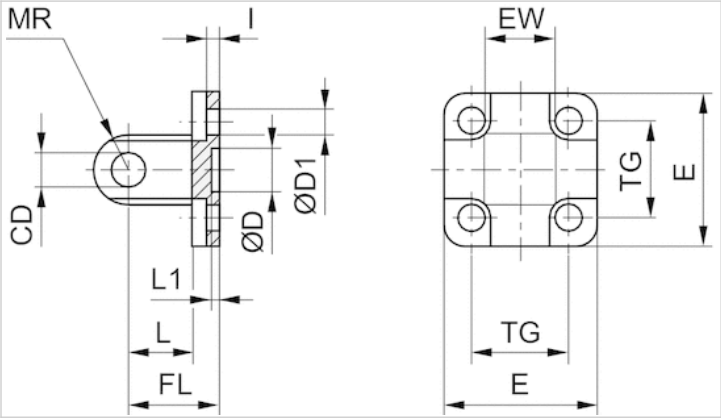

Dimensions

Part No.	Piston Ø	CD H9	Ø D	Ø D1	E	EW	FL ±0,2	I ±0,5	L min.	L1 min.
1825805368	16 mm	6	10 H13	4.5	27	12 –0,2/–0,6	16	2.6	10	3
1827002300	20 mm	8	12 H13	5.5	34	16 –0,2/–0,6	20	2.6	14	3
1827002301	25 mm	8	12 H13	5.5	40	16 –0,2/–0,6	20	2.6	14	3
1827001283	32 mm	10	30 H11	6.6	48	26 –0,2/–0,6	22	5.5	12	4.5
1827001284	40 mm	12	35 H11	6.6	53	28 –0,2/–0,6	25	5.5	15	4.5
1827001285	50 mm	12	40 H11	9	63	32 –0,2/–0,6	27	6.5	15	4.5
1827020086	63 mm	16	45 H11	9	73	40 –0,2/–0,6	32	6.5	20	4.5
1827001287	80 mm	16	45 H11	11	98	50 –0,2/–0,6	36	10	20	4.5
1827001288	100 mm	20	55 H11	11	115	60 –0,2/–0,6	41	10	25	4.5

MR max.	TG
6	18 ±0,2
8	22 ±0,4
8	26 ±0,4
10	32,5 ±0,2
12	38 ±0,2
12	46,5 ±0,2
16	56,5 ±0,2
16	72 ±0,2
20	89 ±0,2

Rear eye MP6, Series CM1

- With ball joint and foot
- Cylinder mounting in accordance with ISO 15552 ISO 6431
- Suitable piston Ø 32 40 50 63 80 100 mm



Standards	See table below
Weight	See table below

Technical data

Part No.	Piston Ø	Swivel bearing Ø	Standardization	Housing material
2798060320	32 mm	10 mm	ISO 15552	Aluminum (forged and anodized)
3663604000	40 mm	12 mm	ISO 6431	Aluminum
R412025637	50 mm	16 mm	ISO 15552	Aluminum (forged and anodized)
2798060630	63 mm	16 mm	ISO 15552	Aluminum (forged and anodized)
R412025638	80 mm	20 mm	ISO 15552	Aluminum (forged and anodized)
2798061000	100 mm	20 mm	ISO 15552	Aluminum (forged and anodized)

Part No.	Screws material	Bearing material, inner ring	Bearing material, outer ring	Weight
2798060320	Stainless steel	Stainless steel	Stainless steel with PTFE coating	0.1 kg
3663604000	galvanized steel	Stainless steel	Brass with PTFE coating	0.1 kg
R412025637	Stainless steel	Stainless steel	Stainless steel with PTFE coating	0.2 kg
2798060630	Stainless steel	Stainless steel	Stainless steel with PTFE coating	0.4 kg
R412025638	Stainless steel	Stainless steel	Stainless steel with PTFE coating	0.5 kg
2798061000	Stainless steel	Stainless steel	Stainless steel with PTFE coating	0.9 kg

Scope of delivery: clevis incl. mounting screws

Technical information

Material	
Material	Aluminum (forged and anodized) Aluminum
Screws	Stainless steel galvanized steel
Bearing	Stainless steel

Dimensions

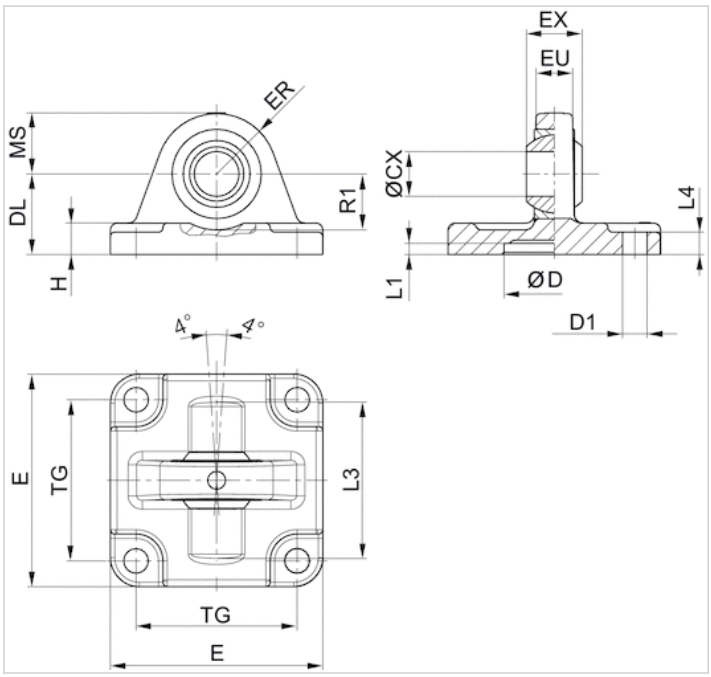

Dimensions

Part No.	Piston Ø	ØCX H7	ØD H11	ØD1 H13	DL ±0,2	E	EX –0,1	ER	EU	H	L1 min.	L3
2798060320	32 mm	10	30	6,6	22	46	14	17	12,5	6.5	4.5	–
3663604000	40 mm	12	30	6.6	28	55	12	17	9.5	8	0.5	48
R412025637	50 mm	16	40	9	27	64	21	22	14	9	4.5	48
2798060630	63 mm	16	45	9	32	74	21	25	15	11	4,5	–
R412025638	80 mm	20	45	11	36	94	25	30	17	12	4.5	70
2798061000	100 mm	20	55	11	41	114	25	32	20	15	4,5	–

L4	MS -0,5	R1 min.	TG
5,5	15,5	16,5	32,5
8	17	16	32
6,5	21	19	46,5
6,5	23	25,5	56,5
10	28	24	72
10	30	31	89

Rear eye MP9, Series CM1

- With rubber bushing
- Cylinder mounting in accordance with ISO 15552 ISO 21287
- Suitable piston Ø 32 40 50 63 80 100 25 mm



Standards	See table below
Weight	See table below

Technical data

Part No.	Piston Ø	Swivel bearing Ø	Standardization	Housing material	Weight	Fig.
3683203000	32 mm	10 mm	ISO 15552	Aluminum (forged)	0.092 kg	Fig. 2
3683204000	40 mm	12 mm	ISO 15552	Aluminum (forged)	0.143 kg	Fig. 1
3683205000	50 mm	12 mm	ISO 15552	Aluminum (forged)	0.217 kg	Fig. 2
3683206000	63 mm	16 mm	ISO 15552	Aluminum (forged)	0.411 kg	Fig. 1
3683208000	80 mm	16 mm	ISO 15552	Aluminum (forged)	0.64 kg	Fig. 2
3683210000	100 mm	20 mm	ISO 15552	Aluminum (forged)	0.956 kg	Fig. 1
3683202000	25 mm	10 mm	ISO 21287	Die-cast aluminum	0.063 kg	Fig. 1

Scope of delivery: clevis incl. mounting screws

Technical information

Material	
Material	Aluminum (forged) Die-cast aluminum
Bearing	Bronze

Dimensions

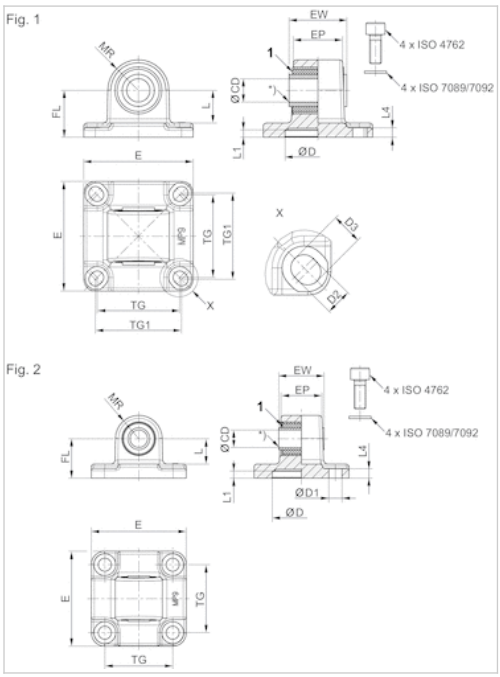

1) Rubber bushing

Dimensions

Part No.	Piston Ø	CD H11	CD H9	E	EW	EP	TG	TG1 ±0,2	FL ±0,2	L 1)	MR	L1	L4
3683203000	32 mm	10	-	46	25.5	18,9	32.5	–	22	13.8	12.5	5	5.5
3683204000	40 mm	-	12	53	27	23,5	38	40	25	16.3	15	5	5.5
3683205000	50 mm	-	12	65	31	28	46.5	–	27	17.3	16	5	6.5
3683206000	63 mm	-	16	75	39.5	33.5	56.5	59	32	22.3	21	5	6.5
3683208000	80 mm	-	16	94.5	49.5	43	72	–	36	21.8	22	5	10
3683210000	100 mm	-	20	114	59.5	54	89	90	41	25.8	25	5	10
3683202000	25 mm	10	-	40	17.5	14,5	26	27	20	14.8	12,5	3	3

D H11	D1 H13	D2 -0,2	D3 -0,2	Fig.
30	6.6	–	–	Fig. 2
35	–	6.6	8	Fig. 1
40	9	–	–	Fig. 2
45	6.6	–	–	Fig. 1
45	11	–	–	Fig. 2
55	–	11	11.7	Fig. 1
18	–	5,5	6,2	Fig. 1

Trunnion mounting MT5, MT6, Series CM1

- for mounting to the cylinder cover or base
- Suitable piston Ø 20 25 32 40 50 63 80 100 mm
- for series CCI, KPZ, CCL-IC/-IS CCL-IC/-IS CCI, CVI, CCL-IC/-IS, PRA/TRB



Weight

See table below

The delivered product may vary from that in the illustration.

Technical data

Part No.	Piston Ø	Housing material	Surface	Weight
1825805360	20 mm	Nodular graphite iron	galvanized	0.104 kg
1825805361	25 mm	Nodular graphite iron	galvanized	0.122 kg
R412026354	25 mm	Aluminum	anodized	-
1827001609	32 mm	Nodular graphite iron	galvanized	0.29 kg
1827001610	40 mm	Nodular graphite iron	galvanized	0.5 kg
1827001611	50 mm	Nodular graphite iron	galvanized	0.7 kg
1827002046	63 mm	Nodular graphite iron	galvanized	1.1 kg
1827001613	80 mm	Nodular graphite iron	galvanized	1.5 kg
1827001614	100 mm	Nodular graphite iron	galvanized	2.7 kg

Scope of delivery: trunnion mounting incl. mounting screws

Technical information

Material	
Material	Nodular graphite iron Aluminum
	galvanized anodized
Screws	Steel
	galvanized

Dimensions

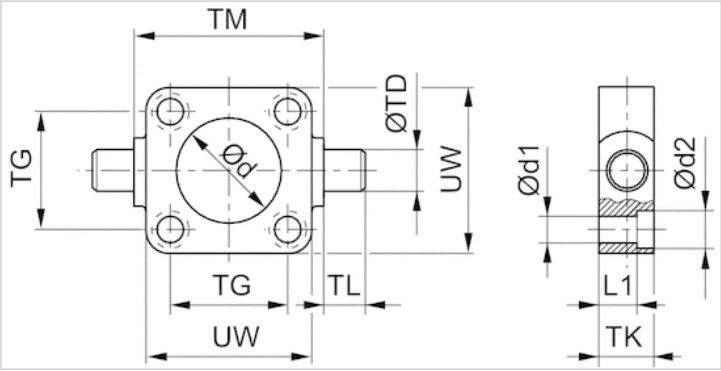

Dimensions

Part No.	Piston Ø	Ø d H11	Ø d1	Ø d2	L1	TD e9	TG ±0,2	TK	TL h14	TM h14	UW
1825805360	20 mm	18	5.5	10	8	12	22	14	12	38	35
1825805361	25 mm	22	5.5	10	8	12	26	14	12	42	39
R412026354	25 mm	24	5.5	10	8	12	26	14	12	42	39
1827001609	32 mm	30	6.6	11	7.5	12	32.5	16	12	50	48
1827001610	40 mm	35	6.6	11	7.5	16	38	20	16	63	56
1827001611	50 mm	40	9	15	10	16	46.5	24	16	75	65
1827002046	63 mm	45	9	15	10	20	56.5	24	20	90	75
1827001613	80 mm	45	11	18	16	20	72	28	20	110	100
1827001614	100 mm	55	11	18	25.5	25	89	38	25	132	120

Bearing AT4, Series CM1

- for trunnion mounting MT4, MT5, MT6
- Cylinder mounting in accordance with ISO 15552
- Suitable piston Ø 20, 25, 32 40, 50 63, 80 100, 125 mm
- for series CCI, CCL-IC, ICL, KPZ, PRA/TRB CCI, CCL-IC, KPZ, PRA/TRB



Standards	ISO 15552

Technical data

Part No.	Piston Ø	Swivel bearing Ø	Scope of delivery
1827001603	20, 25, 32 mm	12 mm	2 piece
1827001604	40, 50 mm	16 mm	2 piece
1827001605	63, 80 mm	20 mm	2 piece
1827001606	100, 125 mm	25 mm	2 piece

Technical information

Material	
Material	Steel
	galvanized
Guide bushing	Sintered bronze

Dimensions

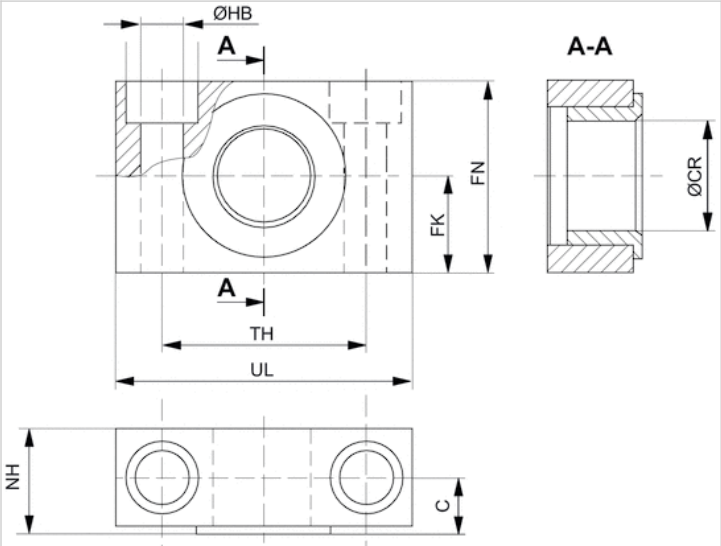

Dimensions

Part No.	Piston Ø	UL	NH	TH	C	CR H9	HB H13	FN	FK	Plain bearing
1827001603	20, 25, 32 mm	46	18	32 ±0,2	10.5	12	6.6	30	15 ±0,1	Sintered bronze
1827001604	40, 50 mm	55	21	36 ±0,2	12	16	9	36	18 ±0,1	Sintered bronze
1827001605	63, 80 mm	65	23	42 ±0,2	13	20	11	40	20 ±0,1	Sintered bronze
1827001606	100, 125 mm	75	28.5	50 ±0,2	16	25	14	50	25 ±0,1	Sintered bronze

Flange mounting MF1, MF2, Series CM1

- Cylinder mounting in accordance with ISO 15552
- Suitable piston Ø 32 40 50 63 80 100 mm



Standards	ISO 15552

Technical data

Part No.	Piston Ø	Swivel bearing Ø
1827001277	32 mm	30 mm
1827001278	40 mm	35 mm
1827001279	50 mm	40 mm
1827001499	63 mm	45 mm
1827001281	80 mm	45 mm
1827001282	100 mm	55 mm

Scope of delivery: flange mounting incl. mounting screws

Technical information

Material	
Material	Steel
	galvanized
Screws	Steel
	galvanized

Dimensions

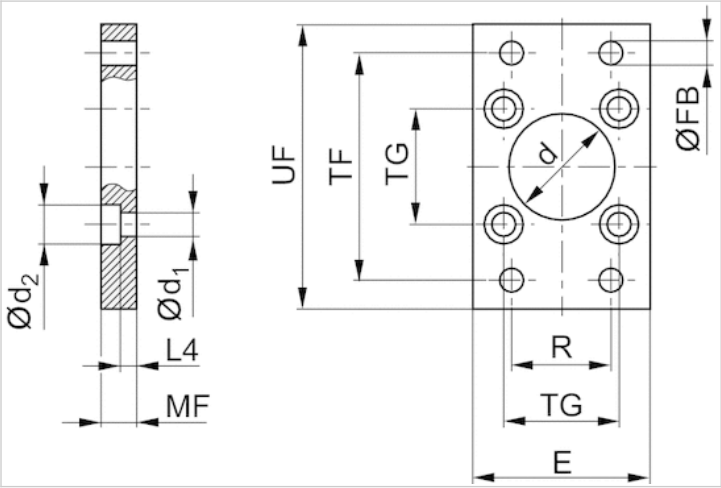

Dimensions

Part No.	Piston Ø	Ød H11	Ød1	Ød2	E max.	ØFB	L4	MF	R	TF	TG	UF
1827001277	32 mm	30	6.6	11	50	7	4.5	10	32	64	32,5 ±0,2	80
1827001278	40 mm	35	6.6	11	55	9	4.5	10	36	72	38 ±0,2	90
1827001279	50 mm	40	9	15	65	9	6	12	45	90	46,5 ±0,2	110
1827001499	63 mm	45	9	15	75	9	6	12	50	100	56,5 ±0,2	125
1827001281	80 mm	45	11	18	100	12	9	16	63	126	72 ±0,2	154
1827001282	100 mm	55	11	18	120	14	9	16	75	150	89 ±0,2	186

Flange mounting MF1, MF2, Series CM1

- Suitable piston Ø 16 20 25 mm



Weight See table below

Technical data

Part No.	Piston Ø	Swivel bearing Ø	Weight
1821038241	16 mm	10 mm	0.05 kg
1827002292	20 mm	12 mm	0.18 kg
1827002293	25 mm	12 mm	0.23 kg

Scope of delivery: flange mounting incl. mounting screws

Technical information

Material	
Material	Steel
	galvanized

Dimensions

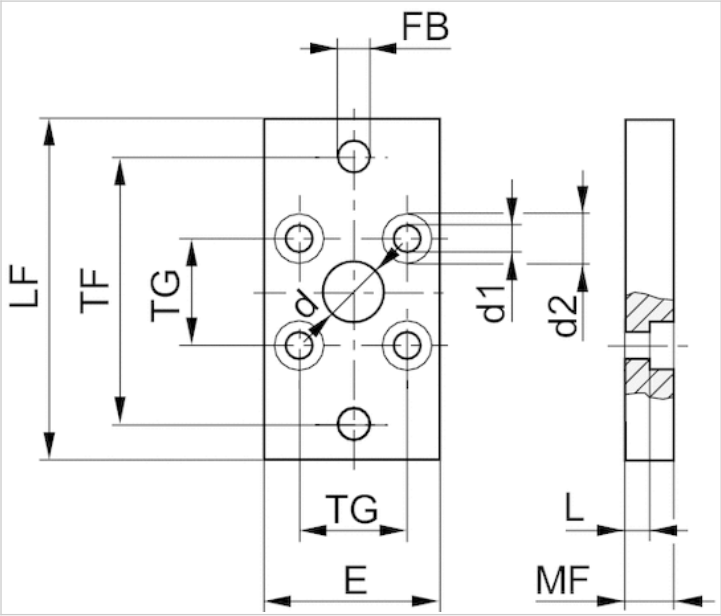

Dimensions

Part No.	Piston Ø	Ød H11	Ød1	Ød2	E 1)	ØFB	L4	MF	R	TF	TG	UF
1821038241	16 mm	10	4.5	10	29	5.5	5.6	10	–	43	18	55
1827002292	20 mm	12	5.5	10	36	6.6	4.6	10	–	55	22	70
1827002293	25 mm	12	5.5	10	40	6.6	4.6	10	–	60	26	76

1) Max.

Foot mounting MS1, Series CM1

- to mount on cylinder PRA, TRB, CCL-IS/-IC, CCI, KPZ, 167, CVI, ITS
- Cylinder mounting in accordance with ISO 15552
- Suitable piston Ø 16 20 25 32 40 50 63 80 100 mm



Standards See table below

Technical data

Part No.	Piston Ø	For series	Standardization
1821332053	16 mm	KPZ CCI CCL-IC	-
1827002284	20 mm	KPZ CCI CCL-IC	-
1827002285	25 mm	KPZ CCI CCL-IC	-
1827001271	32 mm	PRA/TRB CCL-IC/-IS CCI CVI	ISO 15552
1827001272	40 mm	PRA/TRB CCL-IC/-IS CCI CVI	ISO 15552
1827001273	50 mm	PRA/TRB CCL-IC/-IS CCI CVI	ISO 15552
1827001498	63 mm	PRA/TRB CCL-IC/-IS CCI CVI	ISO 15552
1827001275	80 mm	PRA/TRB CCL-IC/-IS CCI CVI	ISO 15552
1827001276	100 mm	CCI CCL-IC/-IS PRA/TRB CVI	ISO 15552

Scope of delivery: 2 foot mountings incl. mounting screws

Technical information

Material	
Material	Steel
	galvanized
Screws	Steel
	galvanized

Dimensions

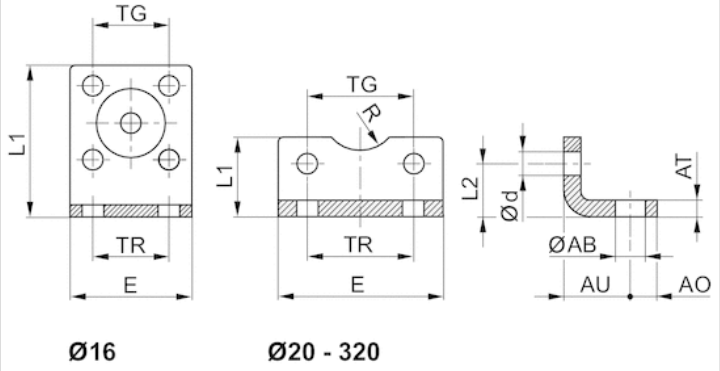

Dimensions

Part No.	Piston Ø	ØAB	AO	AT	AU ±0,2	Ød	E	L1	L2	R	TG	TR
1821332053	16 mm	5.5	5	3	13	4.5	29	35.5	13	8	18 ±0,2	18
1827002284	20 mm	6.6	6	4	16	5.4	36	22	16	10	22 ±0,2	22
1827002285	25 mm	6.6	6	4	16	5.4	40	23	17	11	26 ±0,2	26
1827001271	32 mm	7	8	4 ±0,3	24	6.6	48	25	15.5	15	32,5 ±0,2	32
1827001272	40 mm	10	10	4 ±0,3	28	6.6	56	26	17	17.5	38 ±0,2	36
1827001273	50 mm	10	11	5 ±0,3	32	9	68	32	21.5	20	46,5 ±0,2	45
1827001498	63 mm	10	13	5 ±0,3	32	9	78	34	21.5	22.5	56,5 ±0,2	50
1827001275	80 mm	12	16	6 ±0,5	41	11	98	47	27	22.5	72 ±0,2	63
1827001276	100 mm	14.5	19	6 ±0,5	41	11	117	52	26.5	27.5	89 ±0,2	75

Bolts AA4, Series CM1

- Suitable piston Ø 32 40 50 63 80 100 mm



Weight See table below

Technical data

Part No.	Piston Ø	Weight	Fig.
1823120020	32 mm	0.03 kg	Fig. 1
1823120021	40 mm	0.05 kg	Fig. 1
1823120022	50 mm	0.06 kg	Fig. 1
1823120023	63 mm	0.12 kg	Fig. 1
1823120024	80 mm	0.15 kg	Fig. 1
1823120025	100 mm	0.29 kg	Fig. 1

Scope of delivery: pivot pins incl. circlips

Technical information

Material	
Material	Steel
	galvanized

Dimensions

Fig. 1

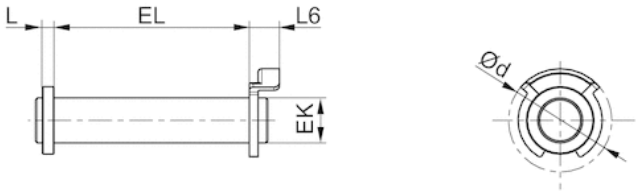

Fig. 2

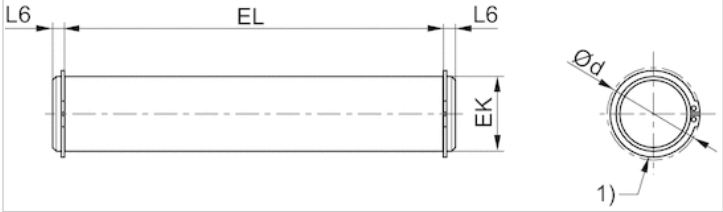

1) circlip DIN 471

Dimensions

Part No.	Piston Ø	Fig.	Ø d max.	EK e8	EL	L max.	L6 max.
1823120020	32 mm	Fig. 1	20	10	45.2 +0,3	3.5	9
1823120021	40 mm	Fig. 1	22	12	52.2 +0,3	4	9
1823120022	50 mm	Fig. 1	22	12	60.2 +0,3	4	9
1823120023	63 mm	Fig. 1	28	16	70.2 +0,3	4.5	11
1823120024	80 mm	Fig. 1	28	16	90.2 +0,3	4.5	11
1823120025	100 mm	Fig. 1	38	20	110.2 +0,3	5	11

Blanking screw

- M4 M5 M6 M8 M10 M12



Technical data

Part No.	Port G	Delivery unit	Fig.
R412024762	M4	4 piece	Fig. 1
R412024763	M5	4 piece	Fig. 1
R402003749	M6	4 piece	Fig. 1
R402003750	M8	4 piece	Fig. 1
R402003751	M10	4 piece	Fig. 2
R402003752	M12	4 piece	Fig. 2

Technical information

Material	
Material	Stainless steel

Dimensions

Fig. 1

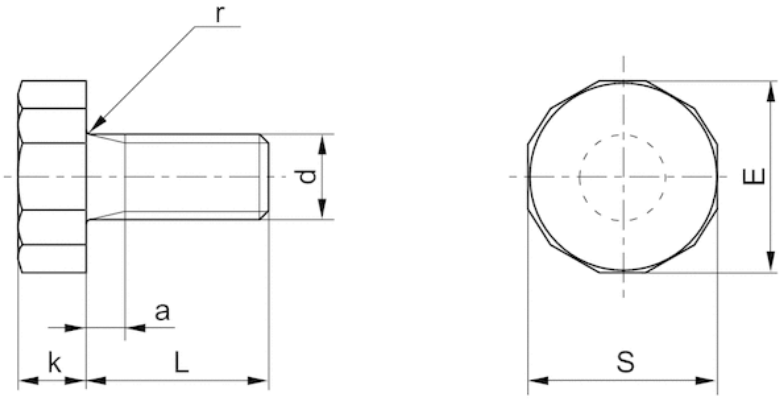

Fig. 2

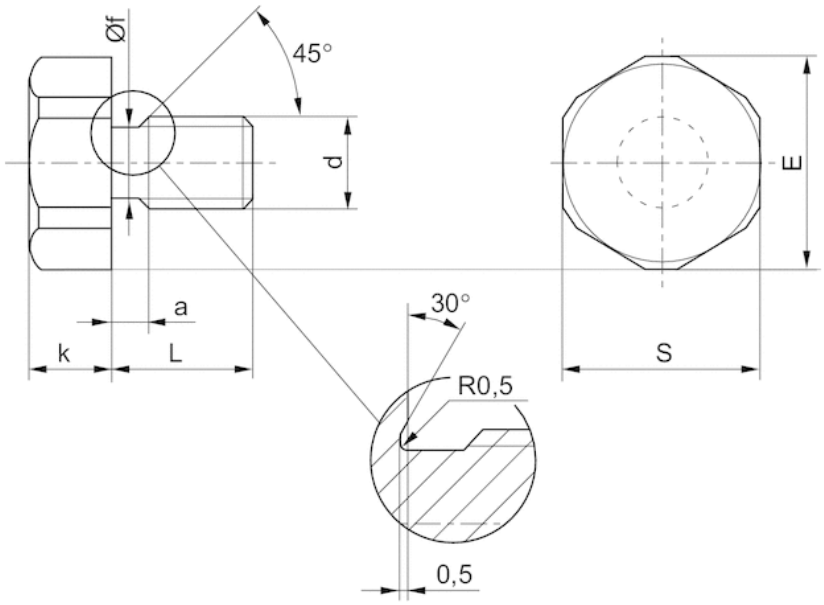

Dimensions in mm

Part No.	a	d	E	k	L	S	r
R412024762	2	M4	9.8	3.9	10	9.8	0.5
R412024763	3	M5	11	4	12	12	0.5
R402003749	3	M6	14	5.3	16	13	0.7
R402003750	3	M8	18	6.4	17	16	0.7
R402003751	4	M10	24	7,9	8.8	15	21
R402003752	4	M12	30	9,5	11.5	18	27

Piston rod nut MR9



Weight See table below

Technical data

Part No.	Suitable piston rod thread	Weight	
8103190644	M6	0.003 kg	-
8103190164	M8	0.006 kg	-
8103190464	M10x1,25	0.008 kg	-
3590304000	M12x1,25	0.02 kg	-
3590305000	M16x1,5	0.03 kg	1)

1) 3590305000 can also be used as an MR3, nut for cylinder mounting.

Technical information

Material	
	Stainless steel

Dimensions

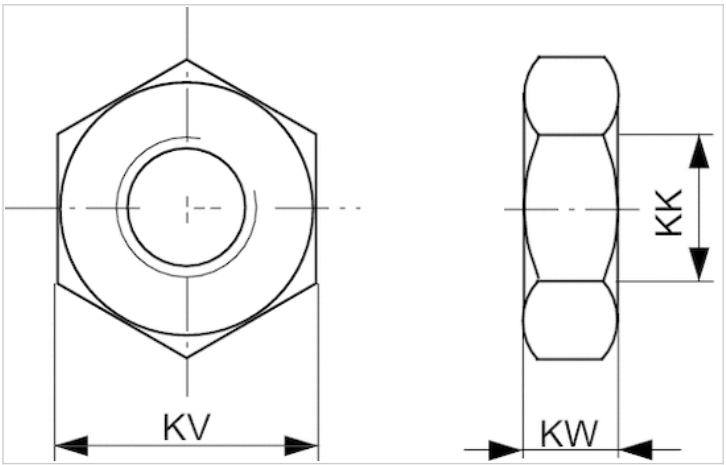

Dimensions

Part No.	KK	KV	KW
8103190644	M6	10	3.2
8103190164	M8	13	4
8103190464	M10x1,25	17	5
3590304000	M12x1,25	19	6
3590305000	M16x1,5	24	8

Rod clevis AP2, Series CM2

- with circlip■to mount on cylinder CCL-IS/IC, CCI, SSI, CSL-RD, ICM, ICS-D2, 167



Weight See table below

Technical data

Part No.	Suitable piston rod thread	for	Weight
3330516000	M6	CSL-RD SSI ICM	0.02 kg
3330520000	M8	CCL-IC CSL-RD CCI ICM	0.05 kg
3590502000	M10x1,25	CCL-IS CCL-IC CCI CSL-RD SSI ICM ICS-D2 167	0.1 kg
3590504000	M12x1,25	CCL-IS CCL-IC CCI SSI 167 ICS-D2	0.16 kg
3590505000	M16x1,5	CCL-IS ICS-D2 167	0.4 kg

Technical information

Material	
	Stainless steel

Dimensions

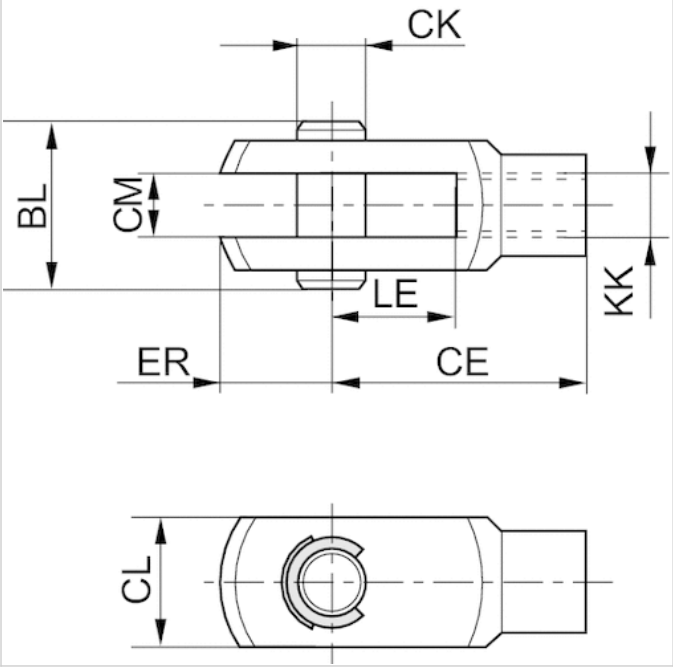

Dimensions

Part No.	KK	CE	CK e8	CL	CM B12	ER	BL	LE
3330516000	M6	24	6	12	6	7	17	12
3330520000	M8	32	8	16	8	10	22	16
3590502000	M10x1,25	40	10	20	10	12	26	20
3590504000	M12x1,25	48	12	24	12	14	31	24
3590505000	M16x1,5	64	16	32	16	19	39	32

Ball eye rod end AP6, series CM2

- with flange■to mount on cylinder CCL-IS/IC, SSI, CSL-RD, ICM, ICS-D2



Weight See table below

Technical data

Part No.	Suitable piston rod thread	for	Swivel bearing Ø	Weight
8958209012	M6	CCL-IC CSL-RD ICM	152.4 mm	0.04 kg
8958209022	M8	CCL-IC CSL-RD ICM	203.2 mm	0.06 kg
8958209032	M10x1,25	CCL-IS CCL-IC SSI CSL-RD ICM ICS-D2	254 mm	0.09 kg
8958209042	M12x1,25	CCL-IS CCL-IC SSI ICS-D2	304.8 mm	0.12 kg
8958209052	M16x1,5	CCL-IS CCL-IC SSI ICS-D2	406.4 mm	0.23 kg

Technical information

Material	
	Stainless steel

Dimensions

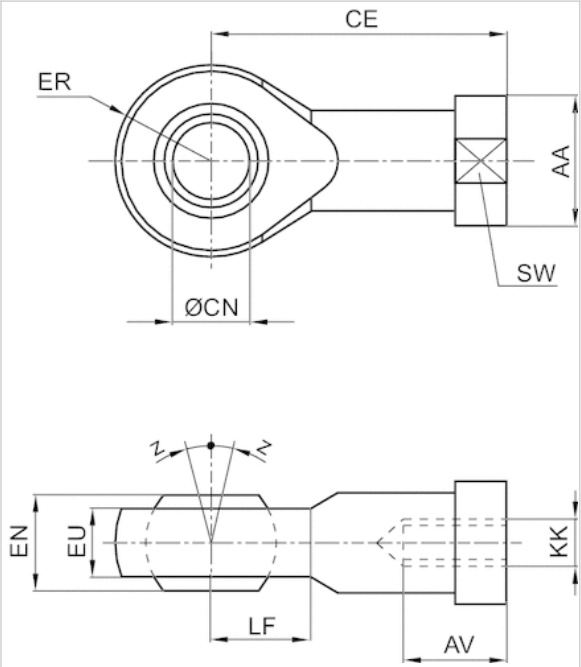

Dimensions

Part No.	KK	AA	AV min.	CE	Ø CN H7	EN –0,1	ER	EU max.	LF	SW	Z [°] max.
8958209012	M6	13	9	30	6	9	10	6,75	10	11	6,5
8958209022	M8	16	12	36	8	12	12	9	12	14	6,5
8958209032	M10x1,25	19	15	43	10	14	14	10.5	14	17	6,5
8958209042	M12x1,25	22	18	50	12	16	16	12	16	19	6,5
8958209052	M16x1,5	27	24	64	16	21	21	15	21	22	7,5

Compensating coupling PM5, series CM2

- to mount on cylinder PRA, TRB, CCL-IS/-IC, CCI, SSI, MNI, KPZ, KHZ, 167, CVI, RPC, RDC, ITS■spherical



Weight See table below

Technical data

Part No.	Suitable piston rod thread	for
R412026140	M6x1	CCL-IC CCI MNI
R412026141	M8x1,25	CCL-IC CCI MNI
R412026142	M10x1,25	PRA TRB CCL-IS CCL-IC CCI SSI KPZ 167 CVI RPC
R412026143	M12x1,25	PRA TRB CCI CCL-IS CCL-IC SSI KPZ 167 CVI RPC
R412026144	M16x1,5	PRA TRB CCI CCL-IS CCL-IC KPZ 167 CVI RPC RDC

Part No.	Weight
R412026140	0.02 kg
R412026141	0.05 kg
R412026142	0.21 kg
R412026143	0.21 kg
R412026144	0.65 kg

Technical information

Material	
	Steel
	galvanized

Dimensions

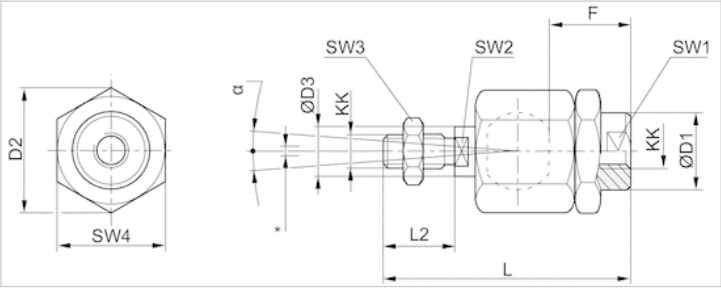

* Radial joint

Dimensions

Part No.	KK	Ø D1	D2	Ø D3	F	L ±2	L2	SW1	SW2	SW3	SW4	α [°]	1)	2)
R412026140	M6x1	8.5	14.5	6	11	36.5	11	7	5	10	13	6	0.05-0.5	0-1,5
R412026141	M8x1,25	12.5	19	8	21	58	21	11	7	13	17	8	0.05-0.5	0-1,5
R412026142	M10x1,25	22	32	14	23	74.5	23	19	12	17	30	8	0.05-0.5	0-2
R412026143	M12x1,25	22	32	14	24	75	24	19	12	19	30	7	0.05-0.5	0-2
R412026144	M16x1,5	32	45	22	30	103	30	30	20	24	41	6	0.05-0.5	0-2

1) Axial play

2) Radial play

Compensating coupling PM7, series CM2

- to mount on cylinder PRA, TRB, CCL-IS/-IC, CCI, SSI, KPZ, 167, CVI, RPC, ITS■with plate



Weight See table below

Technical data

Part No.	Suitable piston rod thread	for	Weight
1827001629	M10x1,25	PRA TRB CCL-IS CCL-IC CCI SSI KPZ RPC 167	0.3 kg
1827001630	M12x1,25	PRA TRB CCL-IS CCL-IC CCI SSI KPZ RPC 167	0.4 kg
1827001631	M16x1,5	PRA TRB CCL-IS CCL-IC CCI SSI KPZ RPC 167	0.9 kg

Technical information

Material	
	Steel
	galvanized

Dimensions

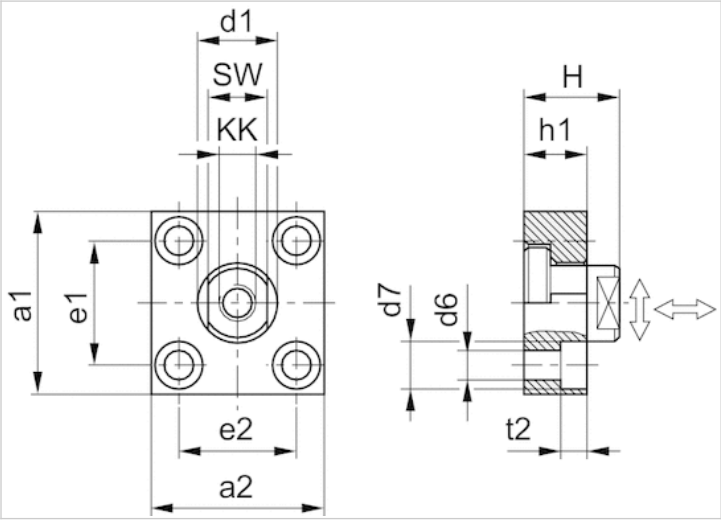

Dimensions

Part No.	a1	a2	d1 h11	d6 H13	d7 H13	e1 H13	e2	h1	t2	H	SW
1827001629	60	37	20	6.6	11	36 ±0,15	23 ±0,15	15	7	24	17
1827001630	60	56	25	9	15	42 ±0,2	38 ±0,2	20	9	30	19
1827001631	80	80	30	11	18	58 ±0,2	58 ±0,2	20	11	32	24

Tightening torque for the coupling pin Ma ± 5%	Axial play min./max.	Radial play min./max.
17 Nm	0.4 0.8 mm	1.9 2.3 mm
29 Nm	0.4 0.8 mm	1.9 2.3 mm
71 Nm	0.4 0.8 mm	1.9 2.3 mm

Sensor, Series ST6

- 6 mm T-slot
- with cable
- open cable ends, 3-pin Plug, M8, 3-pin Plug, M12, 3-pin, with knurled screw
- UL certification, 1.6 mT response sensitivity
- electronic PNP
- Direct mounting for series CCL-IC



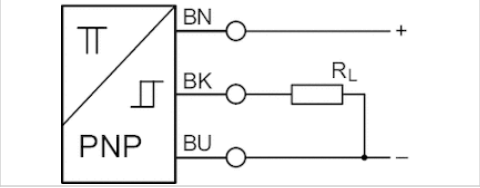

Certificates	CE declaration of conformity cULus RoHS
Ambient temperature min./max.	-30 ... 80 °C
Protection class	IP65, IP67, IP69K
Switching point precision	±0,1 mT
Min./max. DC operating voltage	10 ... 30 V DC
Switching logic	NO (make contact)
LED status display	Yellow Yellow
Vibration resistance	10 - 55 Hz, 1 mm
Shock resistance	30 g / 11 ms
Cable length L	5 0.3 m

Technical data

Part No.	for	Type of contact	Cable length L	Voltage drop U at Imax
R412025609	CCL-IC	electronic PNP	5 m	≤ 2,5 V
R412025610	CCL-IC	electronic PNP	0.3 m	≤ 2,5 V
R412025611	CCL-IC	electronic PNP	0.3 m	≤ 2,5 V

Part No.	DC switching current, max.	Max. switching frequency	Version
R412025609	0.13 A	1000 Hz	short circuit resistant
R412025610	0.13 A	1000 Hz	short circuit resistant
R412025611	0.13 A	1000 Hz	short circuit resistant

Part No.	Fig.
R412025609	Fig. 1
R412025610	Fig. 2
R412025611	Fig. 3

Technical information

Material	
Housing	Polyamide
Cable sheath	Polyurethane
Locking screw	Stainless steel

Dimensions

Fig. 1

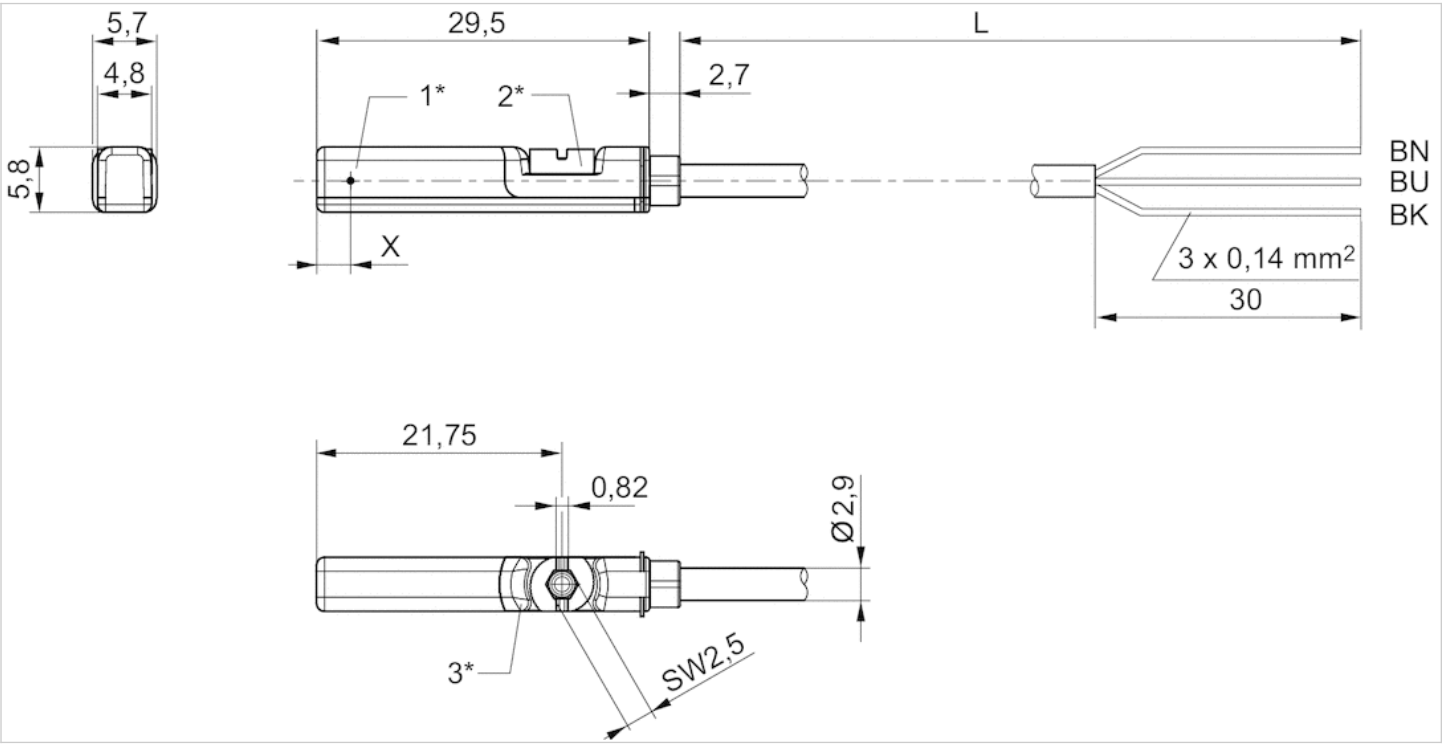

1* = switching point 2* = locking screw 3* = LED window, transparent
L = cable length
BN = brown
BK = black
BU = blue
X = electronic: 11.6 mm

Fig. 2

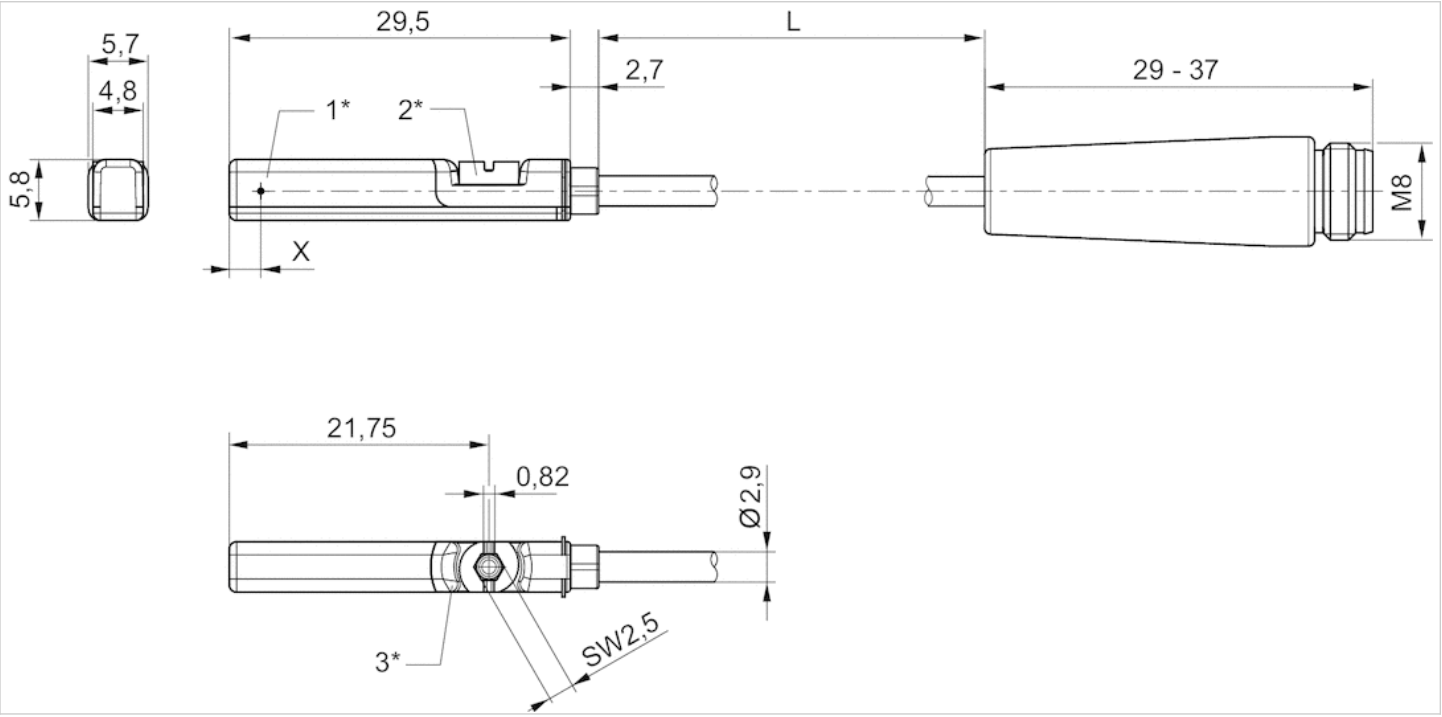
5,7
4,8
5,8
29,5
2,7
L
29 - 37
1*
2*
X
M8
21,75
0,82
Ø2,9
3*
SW2,5

Fig. 3

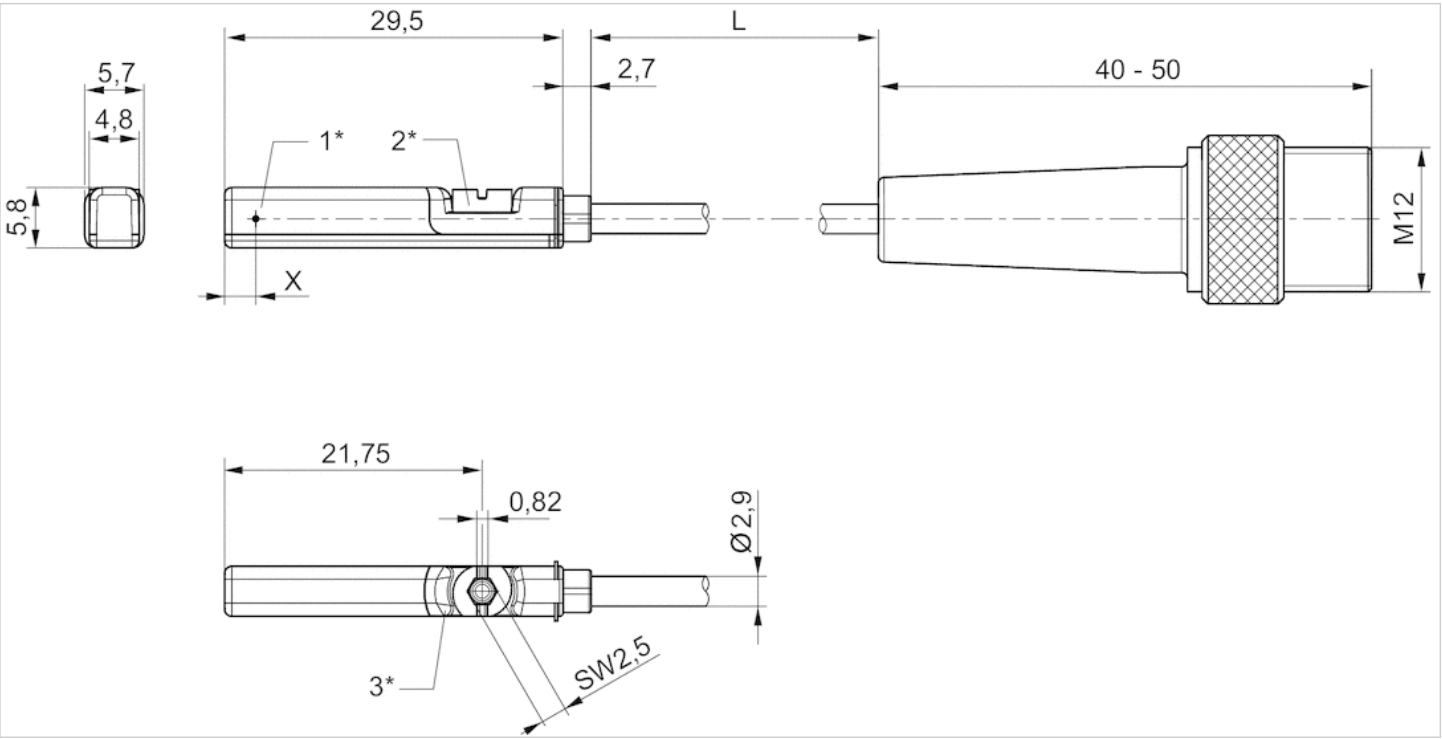
5,7
4,8
5,8
29,5
2,7
L
40 - 50
1*
2*
X
M12
21,75
0,82
Ø2,9
3*
SW2,5

Pin assignments

Pin assignments

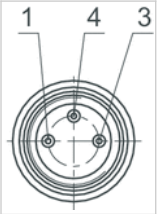

Pin	1	3	4
Allocation	(+)	(-)	(OUT)

Sensor mounting, Series CB1

- for series ST6
- to mount on cylinder CCL-IC



Weight 0.006 kg

Technical data

Part No.	for series
R412025944	ST6

Technical information

Material	
	Aluminum

Dimensions

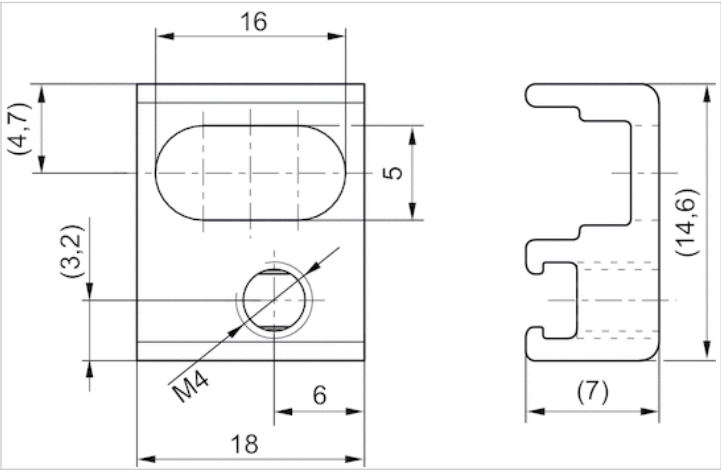

Scope of delivery: incl. threaded pin

Round plug connector, Series CON-RD

- Socket, M8x1, 3-pin, A-coded, straight, 180°
- UL (Underwriters Laboratories)
- unshielded



Connection type	Soldering
Ambient temperature min./max.	-25 ... 80 °C
Operational voltage	48 V AC/DC
Protection class	IP67
Weight	0.009 kg

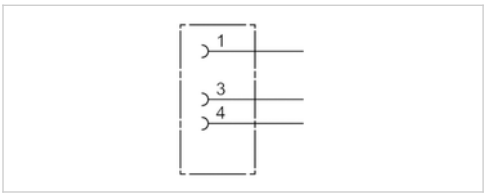

Technical data

Part No.	Max. current	suitable cable-Ø min./max
1834484173	4 A	3.5 / 5 mm

Technical information

The specified protection class is only valid in assembled and tested state.

Technical information

Material	
Housing	Polyamide

Dimensions

Dimensions

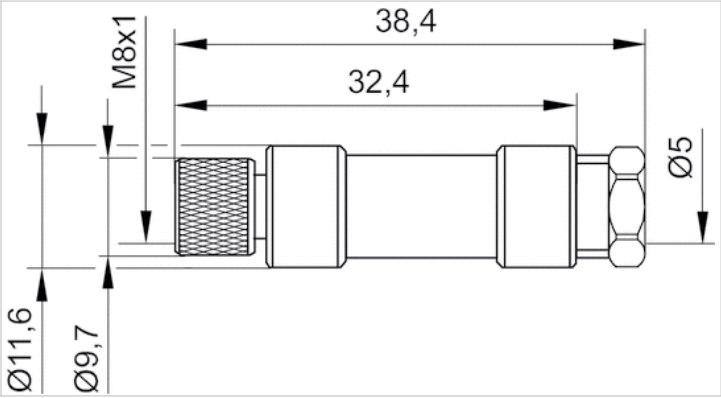

Pin assignments

Pin assignment, socket

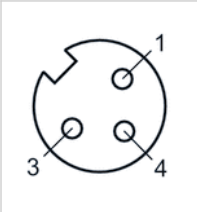

Round plug connector, Series CON-RD

- Socket, M8x1, 3-pin, A-coded, angled, 90°
- UL (Underwriters Laboratories)
- unshielded



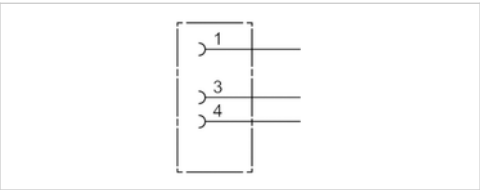

Connection type	Soldering
Ambient temperature min./max.	-40 ... 85 °C
Operational voltage	48 V AC/DC
Protection class	IP67
Weight	0.01 kg

Technical data

Part No.	Max. current	Contact assignment	suitable cable-Ø min./max
1834484174	4 A	3	3.5 / 5 mm

Technical information

The specified protection class is only valid in assembled and tested state.

Technical information

Material	
Housing	Polyamide

Dimensions

Dimensions

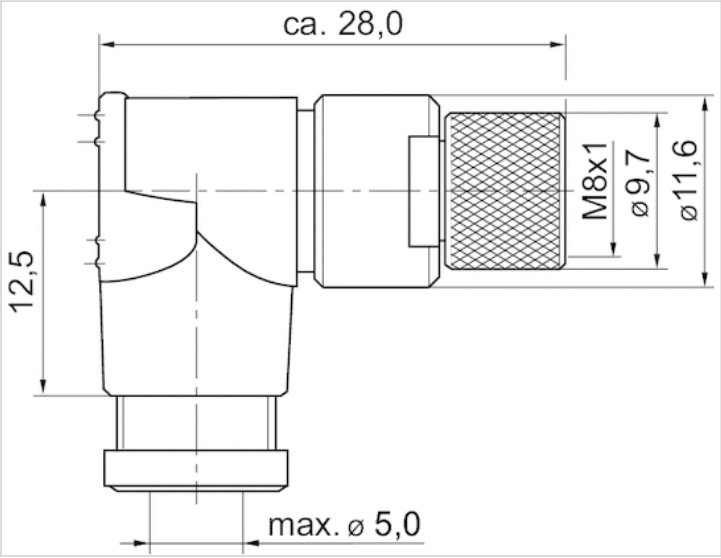

Pin assignments

Pin assignment, socket

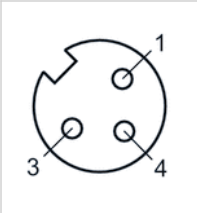

Round plug connector, Series CON-RD

- Socket M8x1 3-pin A-coded straight 180°
- open cable ends
- with cable
- UL (Underwriters Laboratories)
- unshielded



Ambient temperature min./max.	-25 ... 85 °C
Operational voltage	48 V AC/DC
Protection class	IP67
Wire cross-section	0.24 mm²
Weight	See table below

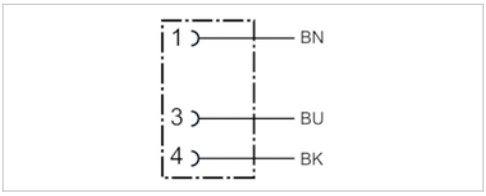

Technical data

Part No.	Max. current	Number of wires	Cable-Ø	Cable length	Certification	Weight
1834484166	4 A	3	4.5 mm	3 m	UL (Underwriters Laboratories)	0.087 kg
1834484168	4 A	3	4.5 mm	5 m	UL (Underwriters Laboratories)	0.141 kg
1834484247	4 A	3	4.5 mm	10 m	UL (Underwriters Laboratories)	0.277 kg

Technical information

The specified protection class is only valid in assembled and tested state.

Technical information

Material	
Housing	Polyurethane
Cable sheath	Polyurethane

Dimensions

Dimensions

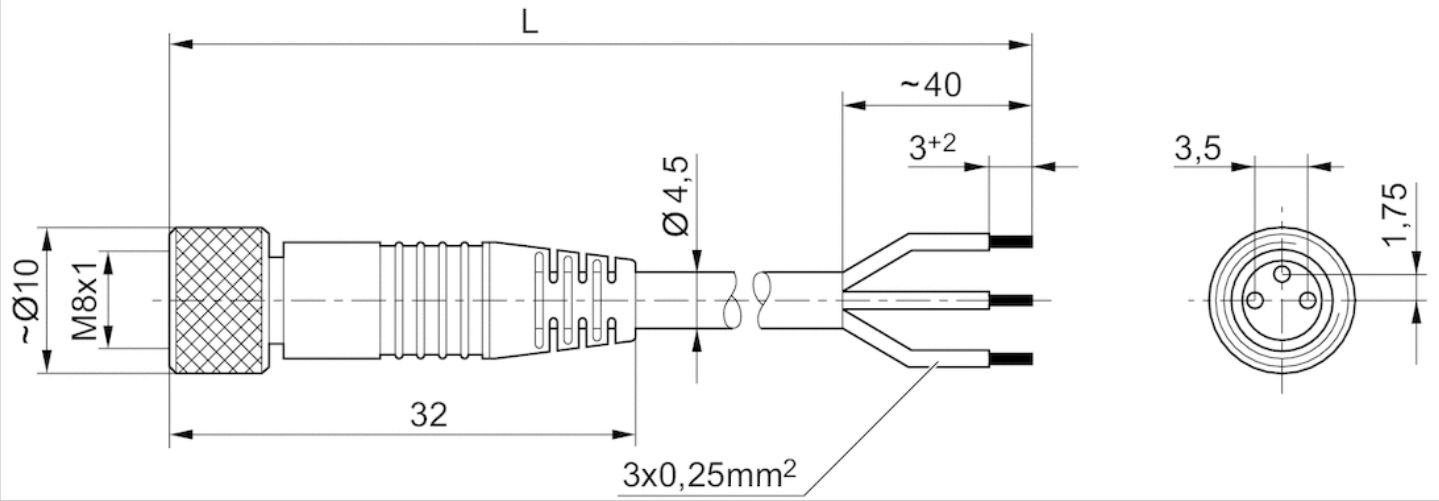

L = length

Pin assignments

Pin assignment, socket

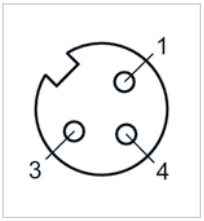

(1) BN=brown
(3) BU=blue
(4) BK=black

Round plug connector, Series CON-RD

- Socket M8x1 3-pin A-coded angled 90°
- open cable ends
- with cable
- unshielded



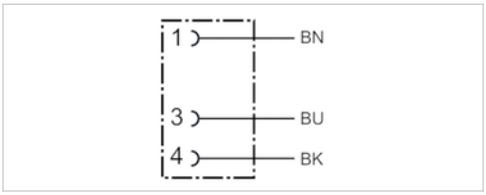

Ambient temperature min./max.	-40 ... 85 °C
Operational voltage	48 V AC/DC
Protection class	IP67
Wire cross-section	0.24 mm²
Weight	See table below

Technical data

Part No.	Max. current	Number of wires	Cable-Ø	Cable length	Weight
1834484167	4 A	3	4.5 mm	3 m	0.087 kg
1834484169	4 A	3	4.5 mm	5 m	0.139 kg
1834484248	4 A	3	4.5 mm	10 m	0.279 kg

Technical information

The specified protection class is only valid in assembled and tested state.

Technical information

Material	
Housing	Polyurethane
Cable sheath	Polyurethane

Dimensions

Dimensions

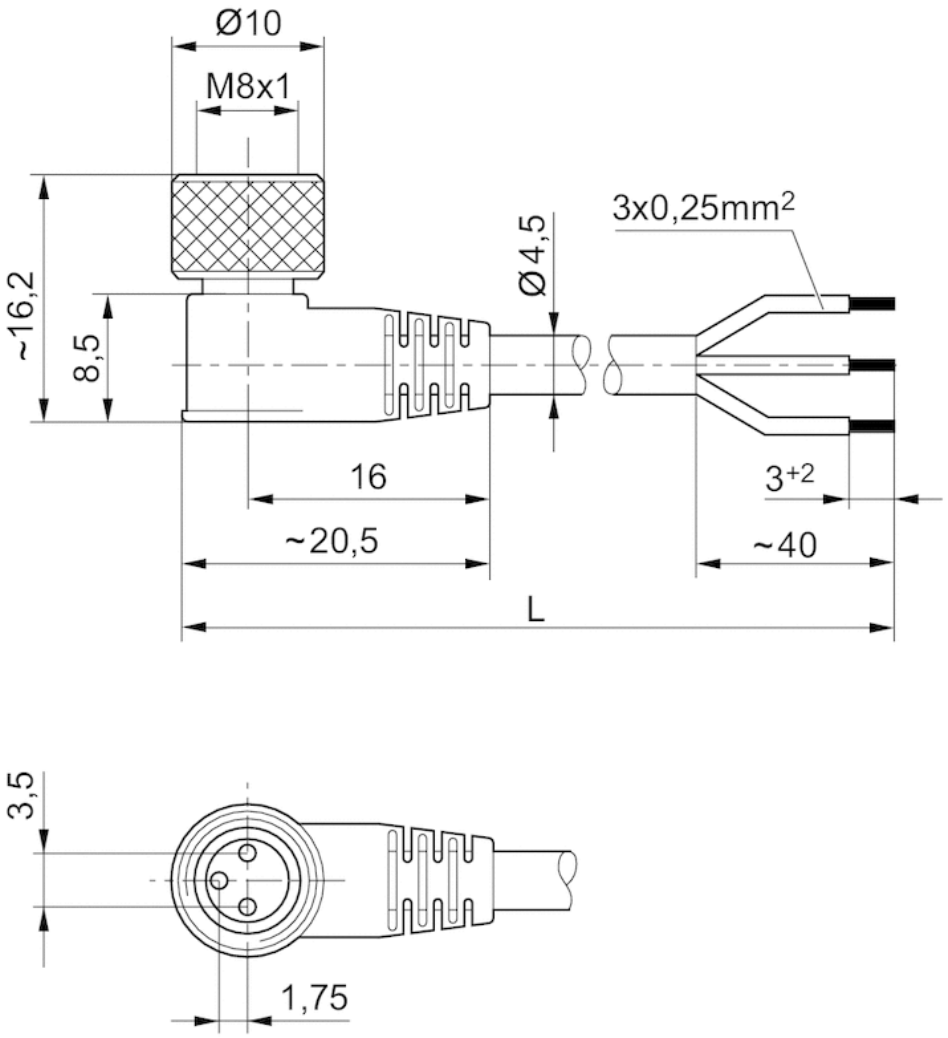

L = length

Pin assignments

Pin assignment, socket

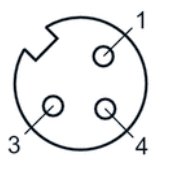

(1) BN=brown
(3) BU=blue
(4) BK=black

Silencers, series SI1

- M5 G 1/8
- Stainless steel



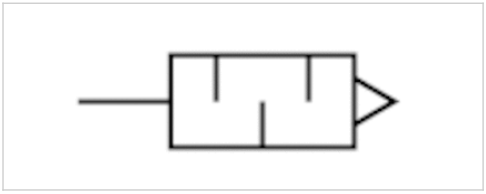

Working pressure min./max.	0 ... 12 bar
Ambient temperature min./max.	-20 ... 150 °C
Medium	Compressed air
Sound pressure level	See table below
Weight	See table below
Comment	Flow characteristic curves can be found under “Diagrams”.

Technical data

Part No.	Compressed air connection	Sound pressure level	Flow	Delivery unit	Weight	
			Qn			
R412010686	M5	68 dB	-	10 piece	0.006 kg	-
R412010687	G 1/8	73 dB	1218 l/min	10 piece	0.01 kg	1)

Weight per piece

1) Nominal flow Qn at p1 = 6 bar (absolute) freely discharged. Sound pressure level measured at 6 bar against atmosphere at 1 m distance.

Technical information

Material	
Silencer	Stainless steel
Thread	Stainless steel

Dimensions

Dimensions

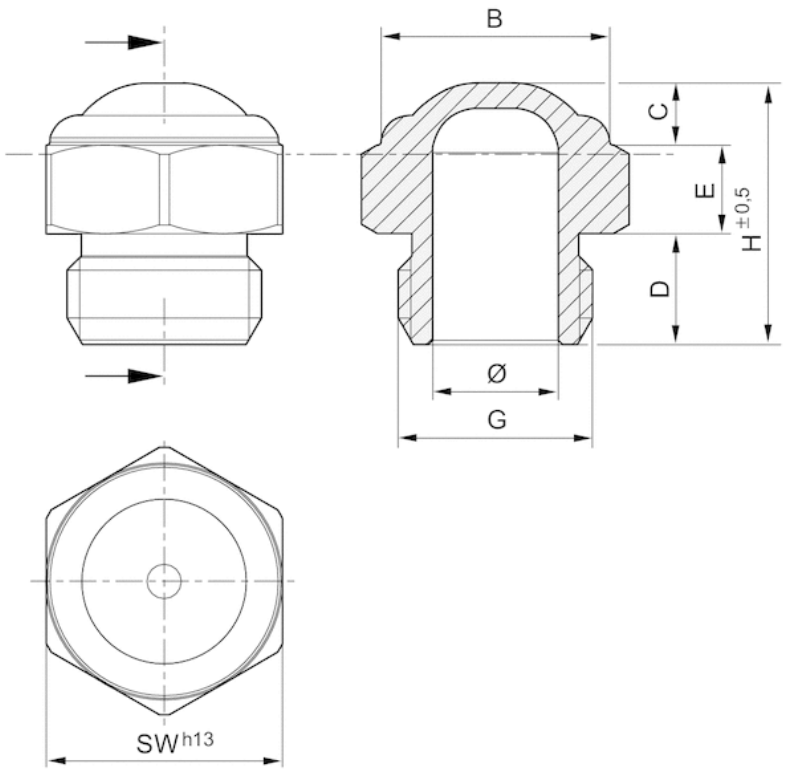

Dimensions

Part No.	Port G	Ø	B	D	E	H	SW
R412010686	M5	2.5	6.5	4	3	8	8
R412010687	G 1/8	6	11	6	4	15	13

Diagrams

Flow diagram, R412010687

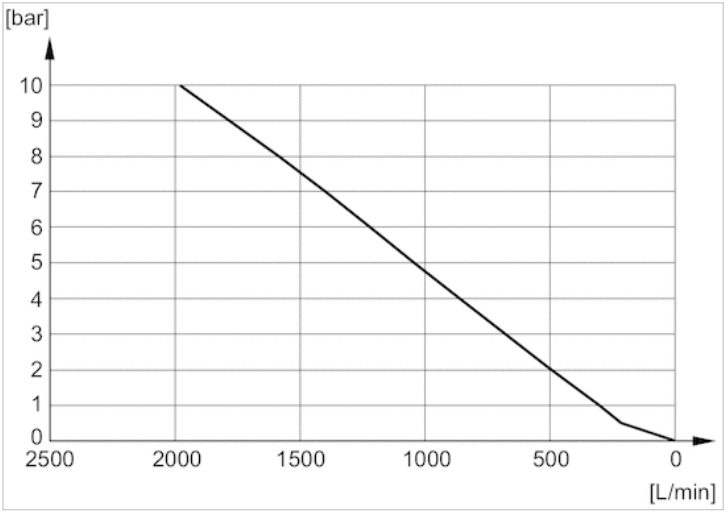

Flow diagram, R412007817

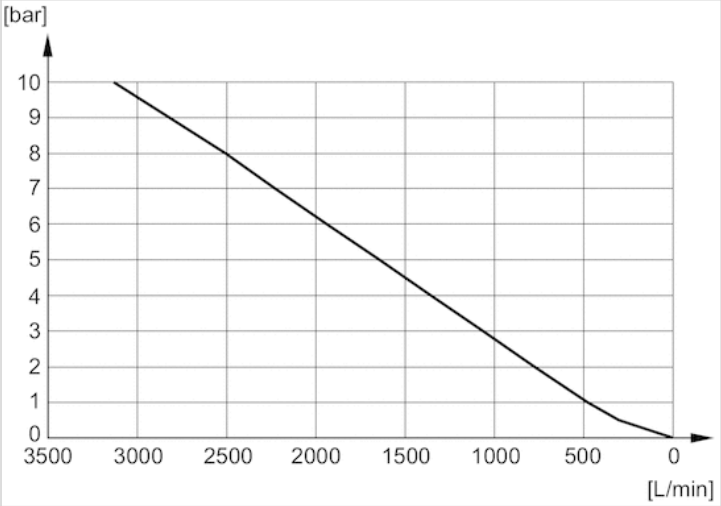

Silencers, series SI1

- M5 G 1/8
- Stainless steel



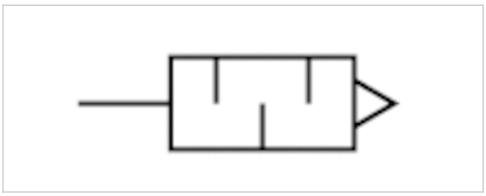

Working pressure min./max.	0 ... 12 bar
Ambient temperature min./max.	-20 ... 150 °C
Medium	Compressed air
Sound pressure level	See table below
Weight	See table below
Comment	Flow characteristic curves can be found under “Diagrams”.

Technical data

Part No.	Compressed air connection	Sound pressure level	Flow	Delivery unit	Weight
			Qn		
R412010090	M5	85 dB	73 l/min	1 piece	0.003 kg
R412010081	G 1/8	90 dB	1312 l/min	1 piece	0.011 kg

Weight per piece

Nominal flow Qn at p1 = 6 bar (absolute) freely discharged. Sound pressure level measured at 6 bar against atmosphere at 1 m distance.

Technical information

Material	
Silencer	Stainless steel
Thread	Stainless steel

Dimensions

Dimensions

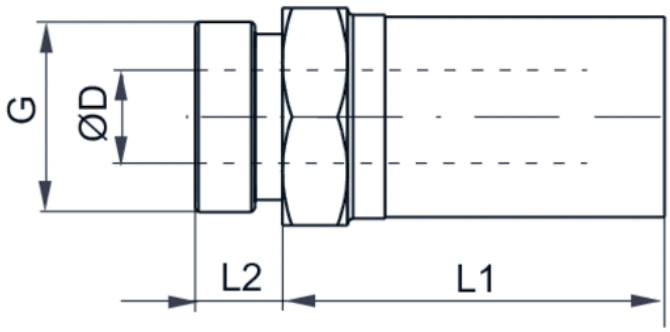

Dimensions

Part No.	Port G	SW	Ø D	L1	L2
R412010090	M5	8	3.1	10.5	3.5
R412010081	G 1/8	13	6.6	20	6

Diagrams

Flow diagram, R412010090

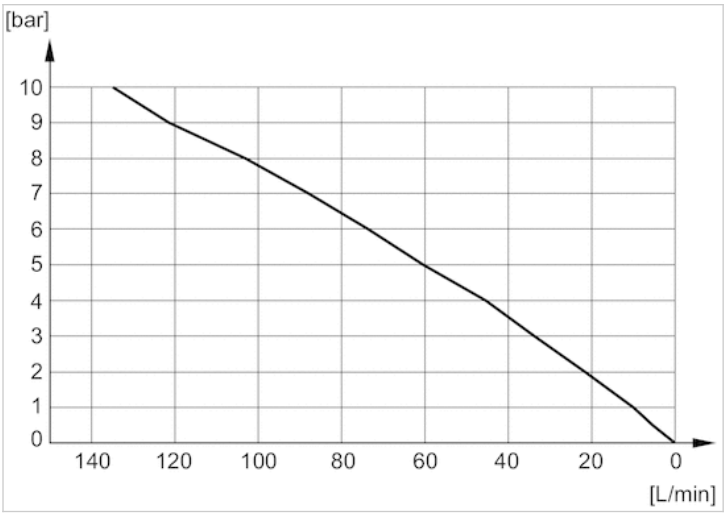

Flow diagram, R412010081

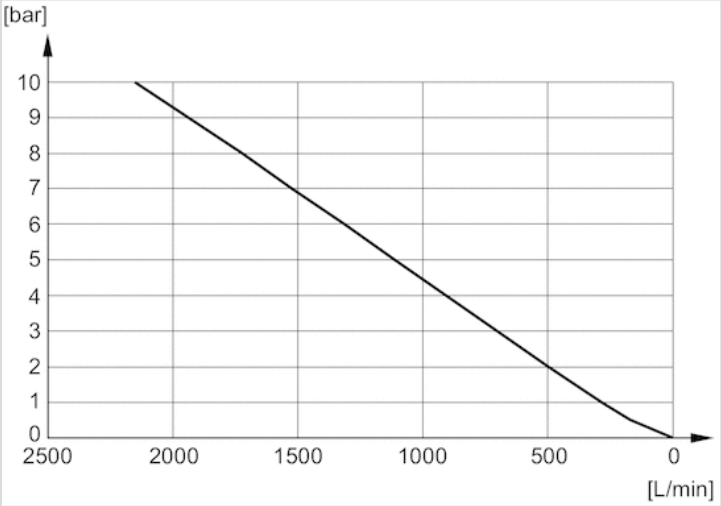

Flow diagram, R412010082

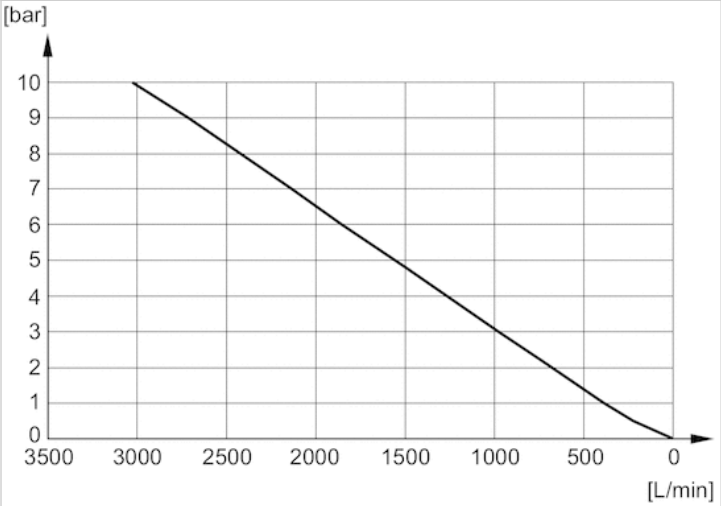

Flow diagram, R412010083

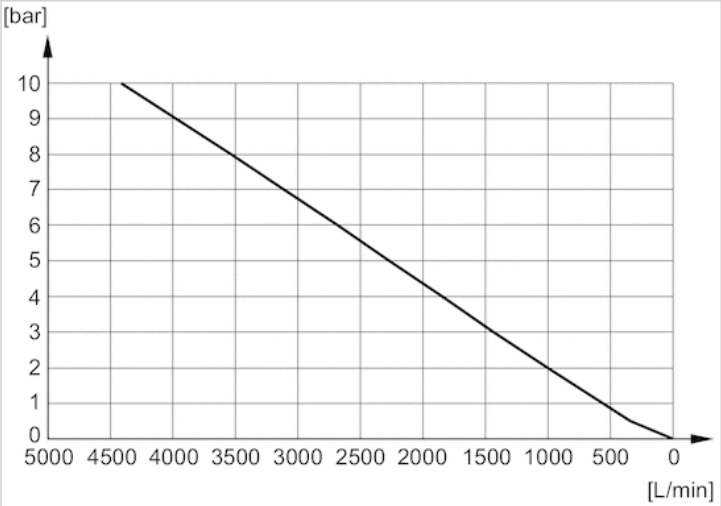

Flow diagram, R412010084

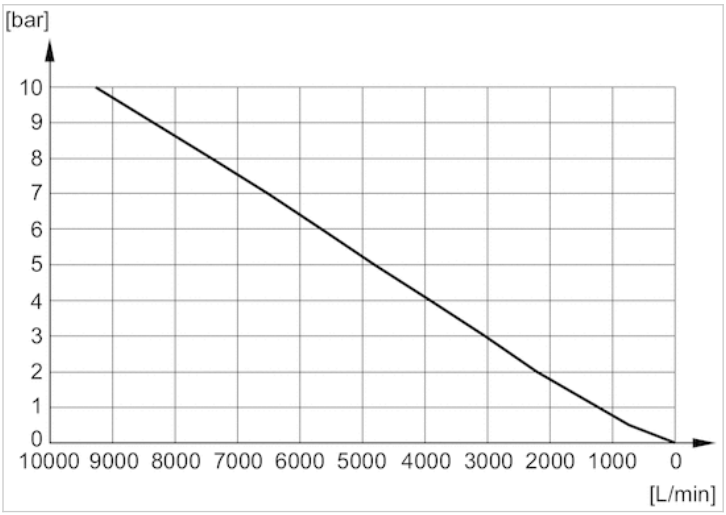

Flow diagram, R412010085

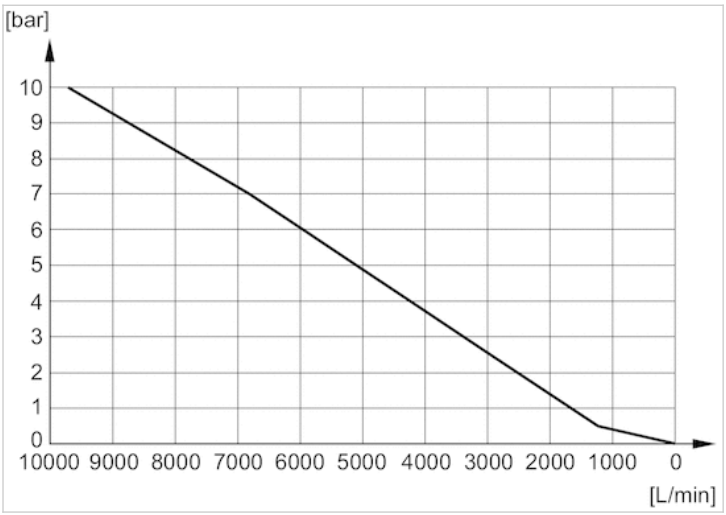

Flow diagram, R412010086

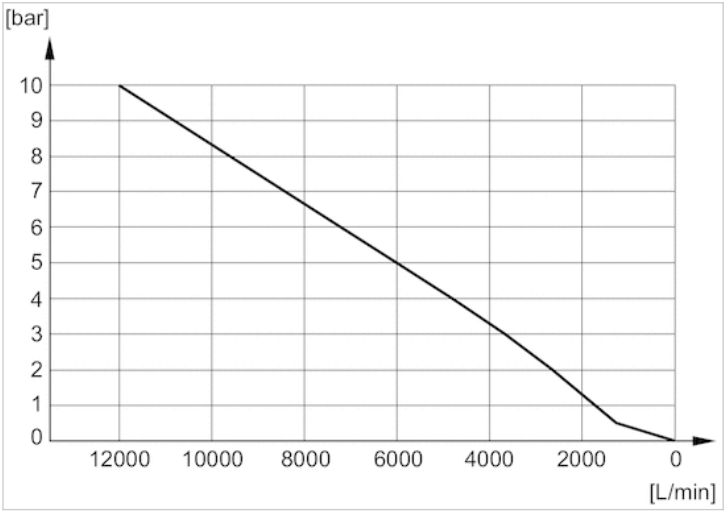

Efficient pneumatic solutions, our program: cylinders and drives, valves and valve systems, air supply management



Visit us: Emerson.com/Aventics

Your local contact: Emerson.com/contactus

Emerson.com

Facebook.com/EmersonAutomationSolutions

LinkedIn.com/company/Emerson-Automation-Solutions

Twitter.com/EMR_Automation

An example configuration is depicted on the title page. The delivered product may thus vary from that in the illustration. Subject to change. This Document, as well as the data, specifications and other information set forth in it, are the exclusive property of AVENTICS GmbH. It may not be reproduced or given to third parties without its consent. Only use the AVENTICS products shown in industrial applications. Read the product documentation completely and carefully before using the product. Observe the applicable regulations and laws of the respective country. When integrating the product into applications, note the system manufacturerâ€™s specifications for safe use of the product. The data specified only serve todescribe the product. No statements concerning a certain condition or suitability for a certain application can be derived from our information. The information given does not release the user from the obligation of own judgment and verification. It must be remembered that the products are subject to a natural process of wear and aging.

The Emerson logo is a trademark and service mark of Emerson Electric Co. Brand logotype are registered trademarks of one of the Emerson family of companies. All other marks are the property of their respective owners. © 2017 Emerson Electric Co. All rights reserved.
2019-03

EMERSON

CONSIDER IT SOLVED™