HENGSTLER

TECHNICAL DATASHEET

Incremental Encoder RI 76TD



- Through hollow shaft Ø 15 to 42 mm
- Outside diameter only 76 mm
- Easy installation by means of clamping ring front or rear
- Operating temperature up to 100°C
- Applications: motors, printing machines, lifts
- 10,000 pulses “true-read”
- Condition Monitoring through Alarm– Signal

ICURO® industry

NUMBER OF PULSES

50 / 100 / 128 / 250 / 256 / 300 / 314 / 360 / 500 / 600 / 720 / 900 / 1000 / 1024 / 1500 / 2048 / 2500 / 3072 / 4096 / 5000 / 8192 / 9000 / 10000
Other number of pulses on request

TECHNICAL DATA
mechanical

Housing diameter	76 mm
Shaft diameter	15 mm / 16 mm / 18 mm / 20 mm / 24 mm / 25 mm / 27 mm / 28mm / 30 mm / 32 mm / 38 mm / 40 mm / 42 mm
Flange (Mounting of housing)	Tether
Mounting of shaft	Front clamping ring, Rear clamping ring
Protection class shaft input (EN 60529)	IP40 or IP64 (front & rear)
Protection class housing (EN 60529)	IP65
Minimum length of mounting shaft clamping ring front	32 mm with Ø 15 ... 30, 35 mm with Ø >30 ... 42
Minimum length of mounting shaft clamping ring rear	corresponding to total length of encoder
Axial endplay of mounting shaft (hubshaft)	With stator coupling A (flexible): ± 2 mm With 1x stator coupling (torsionally rigid): ± 0.5 mm With 2x stator coupling (torsionally rigid): ± 0.3 mm
Radial runout of mating shaft (hubshaft)	With stator coupling A (flexible): ± 0.15 mm With 1x stator coupling (torsionally rigid): ± 0.3 mm With 2x stator coupling (torsionally rigid): ± 0.2 mm
Max. speed	for Ø 15 ... 25 mm at 70 °C and IP64: max. 3600 rpm for Ø >25 ... 42 mm at 70 °C and IP64: max. 1800 rpm for Ø 15 ... 42 mm at 70 °C and IP40: max. 6000 rpm for Ø 15 ... 42 mm at 100 °C always: max. 1800 rpm
Starting torque typ.	3 …. 10 Ncm (depending on version)
Moment of inertia	approx. 140 …. 420 gcm² (depending on version)
Vibration resistance (DIN EN 60068-2-6)	100 m/s² (10 - 2000 Hz)
Shock resistance (DIN EN 60068-2-27)	1000 m/s² (6 ms)
Operating temperature	-25 °C ... +100 °C
Storage temperature	-25 °C ... +100 °C
Material housing	Aluminum
Weight	approx. 320 … 580 g (depending on version)
Connection	Cable, radial

Specifications subject to change without notice

TECHNICAL DATASHEET

Incremental Encoder RI 76TD

TECHNICAL DATA electrical

General design	As per DIN EN 61010-1, protection class III, contamination level 2, overvoltage class II
Supply voltage [1]	RS422 + Sense (T): DC 5 V ±10 % RS422 + Alarm (R): ± 10% DC 5 V or DC 10 - 30 V Push-pull (K), Push-pull complementary (I): DC 10-30 V
Current w/o load typ.	60 mA (DC 5 V), 60 mA (DC 10 V), 35 mA (DC 24 V)
Max. pulse frequency	RS422: 300 kHz Push-pull: 200 kHz
Standard output versions	RS422 + Alarm (R): A, B, N, $\overline{A}$, $\overline{B}$, $\overline{N}$, $\overline{Alarm}$ RS422 + Sense (T): A, B, N, $\overline{A}$, $\overline{B}$, $\overline{N}$, Sense Push-pull (K): A, B, N, $\overline{Alarm}$ Push-pull complementary (I): A, B, N, $\overline{A}$, $\overline{B}$, $\overline{N}$, $\overline{Alarm}$
Pulse width error	± max. 25° electrical
Number of pulses	1 ... 10,000
Alarm output	NPN-O.C., max. 5 mA
Pulse shape	Square wave
Pulse duty factor	1:1

[1] Pole protection with supply voltage DC 10 - 30 V

SHAFT CONNECTION

Shaft fixing is done through a clamping ring either on the flange or cap side.
As a rule, flange side clamping is better for smaller motors as the available shaft stub is correspondingly shorter.

On the other hand, cap side clamping is easier when there is sufficient shaft length available

MOUNTING NECESSITIES

In order to compensate for axial and radial shaft eccentricity as well as any angle offset, the encoder flange must not be rigidly mounted. Please mount the flange with a flexible stator coupling (e.g. hubshaft with tether) as torque support.

There are two flexible mounting plates:

- A flexible hubshaft with tether (A) for higher levels of play and lower requirements for accuracy.
- A rigid hubshaft with tether (N) for reduced play and rigid connection with Reduced swing angle. This is suitable in the case of higher accuracy and dynamics requirements.

ELECTRICAL CONNECTIONS Cable TPE (Connection code F)

Cable TPE (F)	**Output circuit**			
Colour	**RS422 + Sense (T)**	**RS422 + Alarm (R)**	**push-pull (K)**	**push-pull complementary (I)**
brown	Channel A	Channel A	Channel A	Channel A
green	Channel $\overline{A}$	Channel $\overline{A}$		Channel $\overline{A}$
grey	Channel B	Channel B	Channel B	Channel B
pink	Channel $\overline{B}$	Channel $\overline{B}$		Channel $\overline{B}$
red	Channel N	Channel N	Channel N	Channel N
black	Channel $\overline{N}$	Channel $\overline{N}$		Channel $\overline{N}$
violet (white) [1]	Sense GND	$\overline{Alarm}$	$\overline{Alarm}$	$\overline{Alarm}$
blue	Sense V cc	Sense V cc		Sense V cc
brown/green	DC 5 V	DC 5/10 - 30 V	DC 5/10 - 30 V	DC 5/10 - 30 V
white/green	GND	GND	GND	GND
Cable screen [2]	Cable screen [2]	Cable screen [2]	Cable screen [2]	Cable screen [2]

[1] white with RS422 + Sense (T)
[2] connected with encoder housing

Specifications subject to change without notice

TECHNICAL DATASHEET

Incremental Encoder RI 76TD

Dimensioned Drawing

Shaft A	Recommended Connection shaft g8		G	W	B
15	**15**	-0,006 -0,033	31±0,3	37±0,3	28
16	**16**	-0,006 -0,033	31±0,3	37±0,3	28,9
18	**18**	-0,006 -0,033	31±0,3	37±0,3	31
52 (3/4")	**19,050**	-0,007 -0,040	31±0,3	37±0,3	32
20	**20**	-0,007 -0,040	31±0,3	37±0,3	33
24	**24**	-0,007 -0,040	31±0,3	37±0,3	37
25	**25**	-0,007 -0,040	31±0,3	37±0,3	38
27	**27**	-0,007 -0,040	31±0,3	37±0,3	40
28	**28**	-0,007 -0,040	31±0,3	37±0,3	41
30	**30**	-0,007 -0,040	31±0,3	37±0,3	43
32	**32**	-0,009 -0,048	37±0,3	43±0,3	45
38	**38**	-0,009 -0,048	37±0,3	43±0,3	51
40	**40**	-0,009 -0,048	37±0,3	43±0,3	53
51 (1 5/8")	**41,275**	-0,009 -0,048	37±0,3	43±0,3	55
42	**42**	-0,009 -0,048	37±0,3	43±0,3	55

Clamping ring front
Flange code „D"

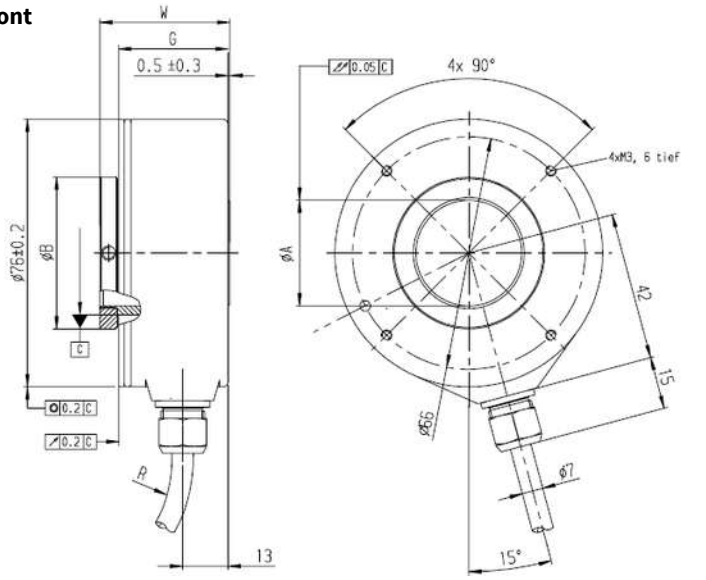

Clamping ring rear
Flange code „H"

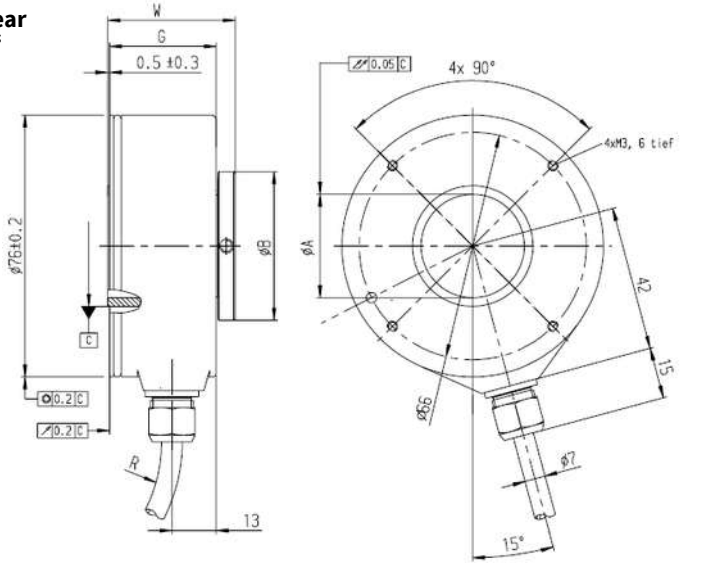

Cable bending radius R for flexible installation ≥100 mm
Cable bending radius R for fixed installation ≥40 mm

Dimensions in mm

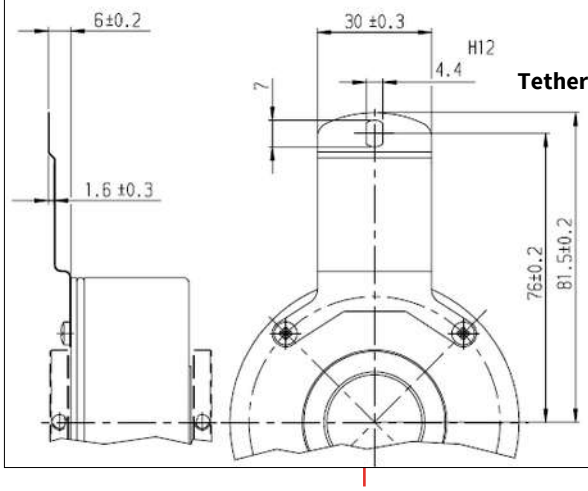

Tether code „A"

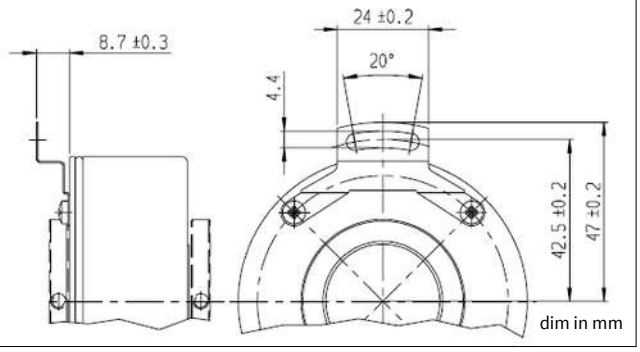

Tether code „N"

dim in mm

Specifications subject to change without notice

Incremental Encoder RI 76TD

ORDERING INFORMATION

Type	Pulses	Supply voltage	Shaft side	Protection	Spring tether	Shaft Ø [3,4,5,6]	Output	Connection
RI76TD	**1...10000**	**A** DC 5V [1] **E** DC 10 - 30V [2]	**D** Clamping shaft with clamping ring front **H** Clamping shaft with clamping ring rear	**1** IP40 **4** IP64	**0** Without **A** Flexible **N** Rigid	**15 ... 42** 15 … 42mm **51** = 1 5/8” **52** = 3/4”	**R** RS422+ Alarm **T** RS422+ Sense **K** Push-pull **I** Push-pull complementary	**F** TPE cable, radial

[1] DC 5 V only with output T, R available
[2] DC 10–30 V only with output I, K, R available
[3] Available with front clamping ring and IP40: 15, 20, 24, 25, 28, 30, 38, 40, 42, 51 (1 5/8")
[4] Available with front clamping ring and IP64: 15, 16, 18, 20, 24, 25, 27, 28, 30, 32, 38, 40, 42, 50 (5/8"), 51 (1 5/8"), 52 (3/4")
[5] Available with rear clamping ring and IP40: 25, 28, 30, 32, 38, 40, 42
[6] Available with rear clamping ring and IP64: 20, 25, 30, 32, 38, 40, 42

ORDERING INFORMATION
Selection of cable length

Versions with cable outlet - C, -D, -H, -F, -8 are available with various lengths of cable. To order your desired cable length, please add the respective code to the end of your ordering code. For variants with connector on cable end please add cable length code in between. Further cable lengths on request.

Code	Cable length	Code	Cable length
without Code	1,5 m	-U0	20 m
-D0	3 m	-V0	25 m
-F0	5 m	-W0	30 m
-K0	10 m	-X0	40 m
-P0	15 m	-Y0	50 m

Example: Cable 3 m length: ... F - D0
Example: Cable mit 3 m length and M23 connector, cw: ... F - D0 - I / -8 , 8 pol M12

Incremental Encoder RI 76TD

Accessories

CONNECTORS

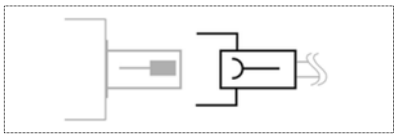

Connector (socket) matching with encoder connector	Ordering code
M23, 12 pole, PG9, cw, mating connector for connection -I	3 539 202

CONNECTORS

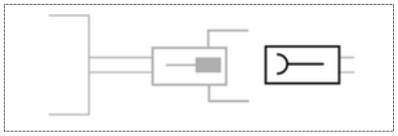

Coupling (socket) matching with encoder cable with connect-or	Ordering code
M23, 12 pole, cw, mating connector for connection -C (cable plug 3 539 186)	3 539 187
M23 (VDW), 12 pole, cw, mating connector for connection -B (cable plug 3 539 252)	3 539 304

CONNECTORS

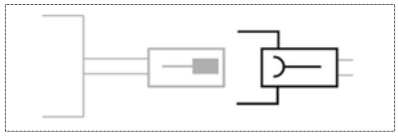

Connector (socket) matching with encoder cable with con-nector	Ordering code
M23, 12 pole, cw, mating connector for connection –D (cable plug 3 539 186)	3 539 229
M23 (VDW), 12 pole, cw, mating connector for connection -B (cable plug 3 539 252)	3 539 305

CONNECTING CABLES



Connecting cables with plug (socket) on one end	Ordering code
M23, 12 pole, TPE cable, cw, mating connector for connection C/D/-I, 3 m	1 522 348
M23, 12 pole, TPE cable, cw, mating connector for connection C/D/-I, 5 m	1 522 349
M23 , 12 pole, TPE cable, cw, mating connector for connection C/D/-I, 10 m	1 522 350
M23, 12 pole, TPE cable, cw, mating connector for connection C/D/-I, 15 m	1 522 454
M23, 12 pole, TPE cable, cw, mating connector for connection C/D/-I, 20 m	1 522 456
M23, 12 pole, TPE cable, cw, mating connector for connection C/D/-I, 25 m	1 522 457
M23, 12 pole, TPE cable, cw, mating connector for connection C/D/-I, 30 m	1 522 464
M23, 12 pole, TPE cable, cw, mating connector for connection C/D/-I, 40 m	1 522 643
M23, 12 pole, TPE cable, ccw, mating connector for connection G/H/-D/-H, 3 m	1 522 394
M23, 12 pole, TPE cable, ccw, mating connector for connection G/H/-D/-H, 5 m	1 522 395
M23, 12 pole, TPE cable, ccw, mating connector for connection G/H/-D/-H, 10 m	1 522 396
M23 , 12 pole, TPE cable, ccw, mating connector for connection G/H/-D/-H, 15 m	1 522 447
M23, 12 pole, TPE cable, ccw, mating connector for connection G/H/-D/-H, 20 m	1 522 461
M23, 12 pole, TPE cable, ccw, mating connector for connection G/H/-D/-H, 25 m	1 522 462
M23, 12 pole, TPE cable, ccw, mating connector for connection G/H/-D/-H, 30 m	1 522 463
M23, 12 pole, TPE cable, ccw, mating connector for connection G/H/-D/-H, 40 m	1 522 779

CONNECTING CABLES

Cable not made up with connectors	Ordering code
TPE cable, 12-core + screen	3 280 112 + length

Specifications subject to change without notice