GEFRAN

GIB

SINGLE/DUAL AXIS ENTRY LEVEL TILT SENSOR (XY/Z)

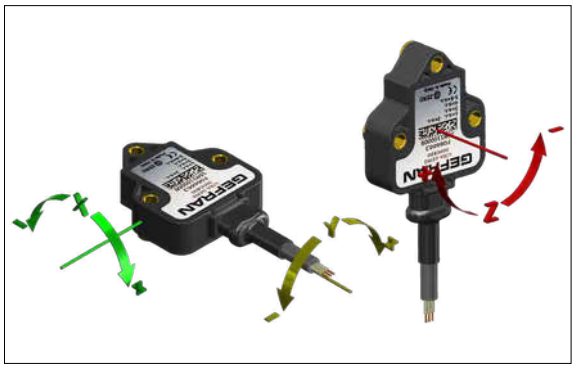

ENTRY LEVEL tilt sensor with MEMS technology.

Space-saving solution, high performances, easy installation.
High IP protection level, resistance to shock and vibration,and high electromagnetic compatibility make this product suitable for many mobile hydraulics applications.

Developed to ensure a robust and high-performance solution for applications such as agricultural machines, construction machines, material handling equipments.

TECHNICAL DATA

Measurement range

±10° ±15° ±20° ±30° ±45° ±60° ±85° (single axis Z for analogue output-dual axis XY)
360° (±180°) single axis Z only

Supply voltage

+5Vdc (only for 0.5..4.5Vdc output); +10…+36Vdc (see output signal for right supply voltage)

Output signal

0.5...4.5Vdc RATIOMETRIC (supply +5Vdc); 0.5...4.5Vdc; 0...10Vdc; 4...20mA; CANopen

Electrical connections

AMP Superseal 6P 282108-1; cable output - PUR sheath conductors AWG 22; Ø 4.4 (single) - Ø 5.5 (redundant); cable output + M12 5 pin male overprinted connector

Resolution

12 bit (analog output); 0.01 deg (CANopen output)

Accuracy (Factory verification @ 25 °C)

< ±0.5% FS

Working temperature

-40... +85 °C

Temperature coefficient at 0-deg inclination

Typical < ±0.006 deg/°C

Long term repeatability

Single axis: Typical < ±0.5 deg in the range ±180 deg
Dual axis: Typical < ±0.5 deg in the range ≤ ±60 deg, ±2 deg otherwise

Vibrations

20g 10 Hz … 2000 Hz IEC 60068-2-6

Shock

Impulsive on 3 axes; 50g 11 ms IEC 60068-2-27

Electromagnetic compatibility

2014/30/EU Electromagnetic Compatibility (EMC)

IP protection level

IP67 - IPX9K with female mating connector mounted AMP282090-1(GIB-A version);
IP67 - IPX9K(GIB-F cable-PUR version);
IP67 with female homologated connector mounted, tightening torque 0.6Nm + low strenght threadlocker (GIB-F cable+M12 connector version)

Housing material

PBT

MECHANICAL DIMENSIONS

AMP VERSION

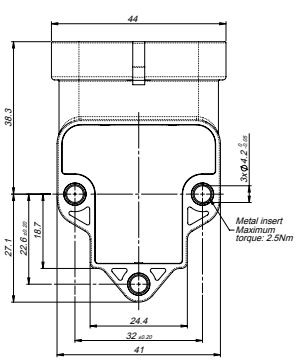

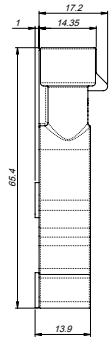

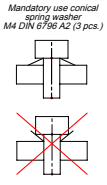

CABLE VERSION

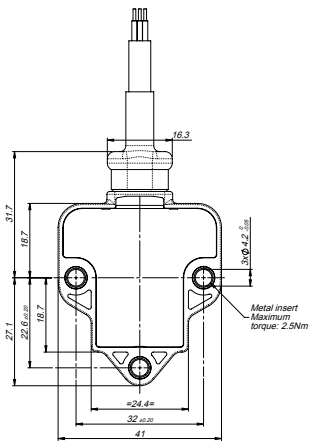

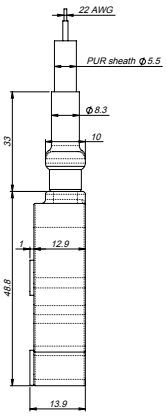

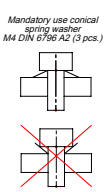

ELECTRICAL CONNECTIONS

AMP VERSION

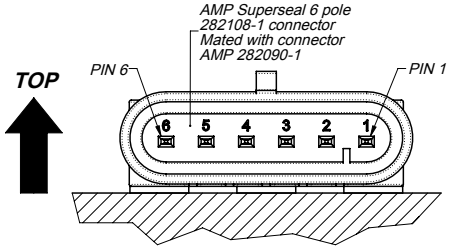

ANALOG CONNECTIONS DUAL AXIS X-Y	ANALOG CONNECTIONS SINGLE AXIS Z	CAN CONNECTIONS SINGLE/DUAL AXIS
1. GROUND	1. GROUND	1. GROUND
2. + SUPPLY	2. + SUPPLY	2. + SUPPLY
3. OUTPUT X	3. OUTPUT Z	3. n.c.
4. OUTPUT Y	4. n.c.	4. n.c.
5. n.c.	5. n.c.	5. CAN L
6. n.c.	6. n.c.	6. CAN H

ITEMS MARKED "n.c." MUST NOT BE CONNECTED

SINGLE AXIS

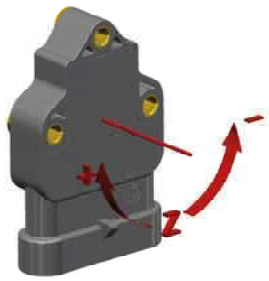

DUAL AXIS

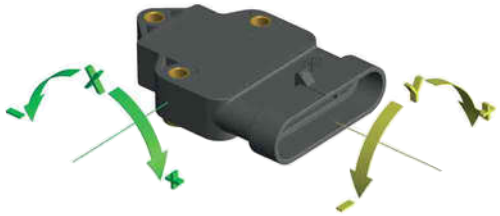

CABLE VERSION

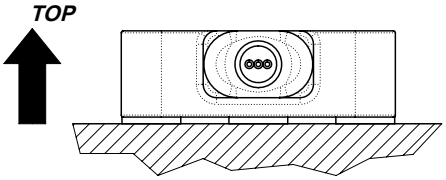

ANALOG CONNECTIONS DUAL AXIS X-Y		ANALOG CONNECTIONS SINGLE AXIS Z		CAN CONNECTIONS SINGLE/DUAL AXIS	
BLACK	GROUND	BLACK	GROUND	BLACK	GROUND
RED	+ SUPPLY	RED	+ SUPPLY	RED	+ SUPPLY
YELLOW	OUTPUT X	YELLOW	OUTPUT Z	BLUE	CAN L
GREEN	OUTPUT Y	GREEN	n.c.	WHITE	CAN H
BLUE	n.c.	BLUE	n.c.		
WHITE	n.c.	WHITE	n.c.		

ITEMS MARKED "n.c." MUST NOT BE CONNECTED

SINGLE AXIS

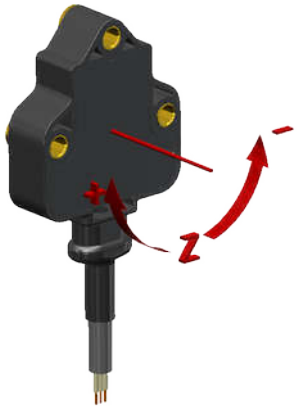

DUAL AXIS

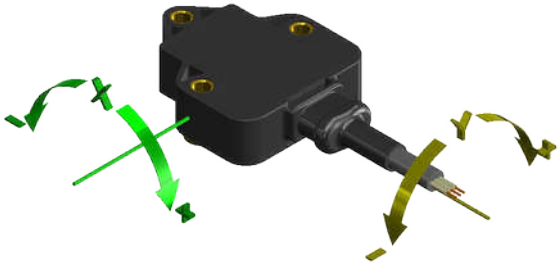

CABLE+M12 VERSION

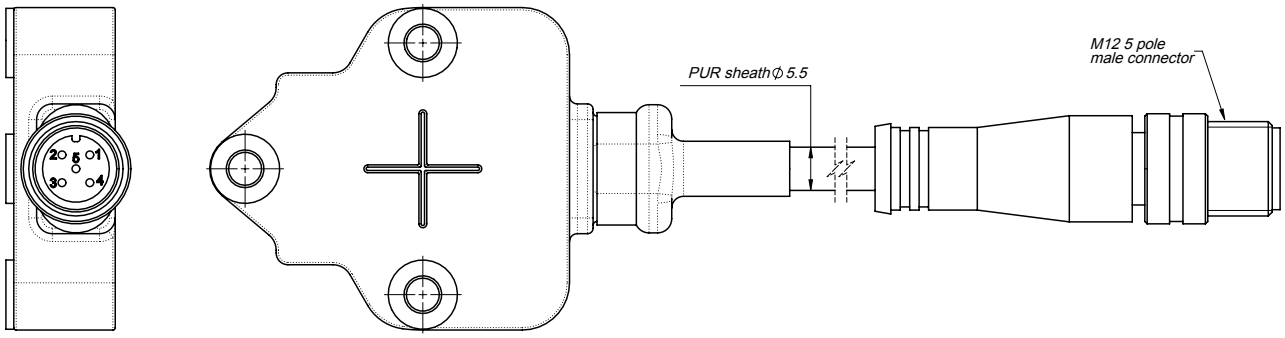

ANALOG CONNECTIONS DUAL AXIS X-Y	***ANALOG CONNECTIONS SINGLE AXIS Z***	***CAN CONNECTIONS SINGLE/DUAL AXIS***
1. + SUPPLY	*1. + SUPPLY*	*1. n.c.*
2. OUTPUT Y	*2. n.c.*	*2. + SUPPLY*
3. GROUND	*3. GROUND*	*3. GROUND*
4. OUTPUT X	*4. OUTPUT Z*	*4. CAN H*
5. n.c.	*5. n.c.*	*5. CAN L*

ITEMS MARKED "n.c." MUST NOT BE CONNECTED

FULL REDUNDANT VERSION

Gefran GIB tilt sensor is designed to be double mounted with specific spacers (BUS027) in order to have a full redundant space-saving version.
Please pay attention how to install the two GIB sensors: please position them both always face up or both face down.

Example of AMP FULL REDUNDANT VERSION

SINGLE AXIS

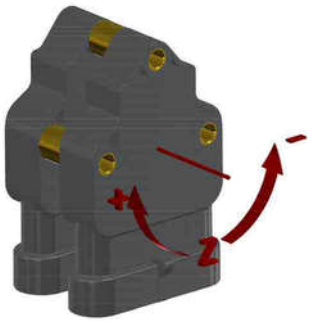

DUAL AXIS

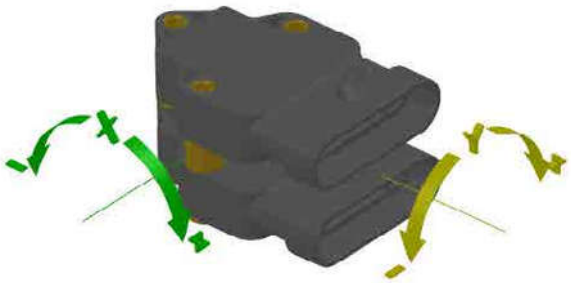

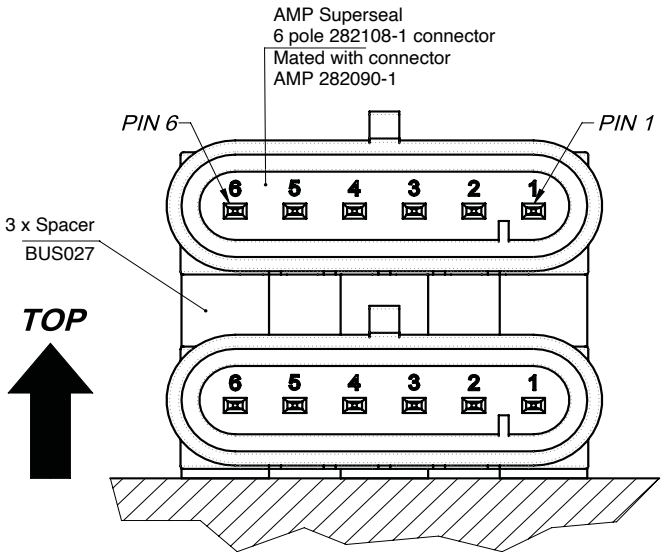

ANALOG CONNECTIONS DUAL AXIS X-Y	ANALOG CONNECTIONS SINGLE AXIS Z	CAN CONNECTIONS SINGLE/DUAL AXIS
1. GROUND	1. GROUND	1. GROUND
2. + SUPPLY	2. + SUPPLY	2. + SUPPLY
3. OUTPUT X	3. OUTPUT Z	3. n.c.
4. OUTPUT Y	4. n.c.	4. n.c.
5. n.c.	5. n.c.	5. CAN L
6. n.c.	6. n.c.	6. CAN H

ITEMS MARKED "n.c." SHOULD NOT BE CONNECTED

MECHANICAL DIMENSIONS

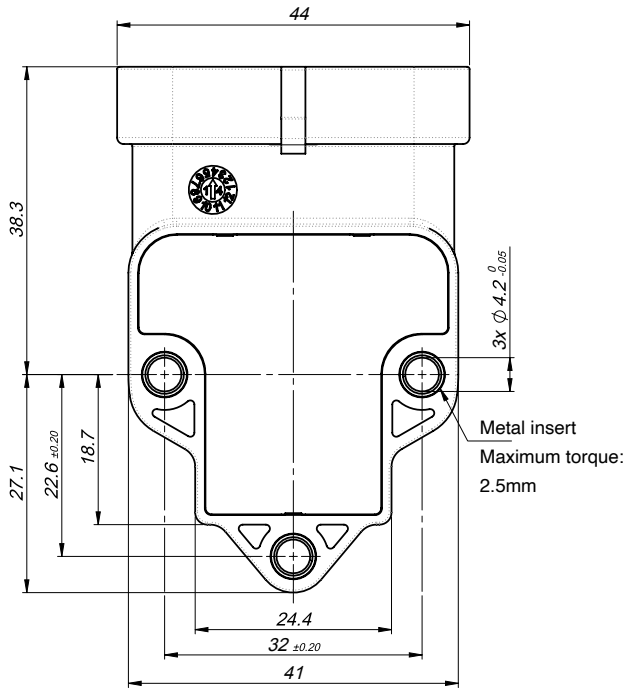

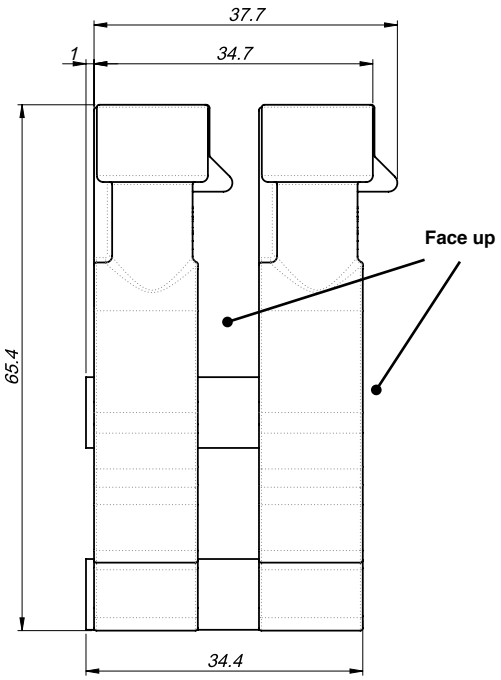

AUTOZERO FUNCTION (additional function)

available for analog versions in GIB-XY configuration (dual axis)

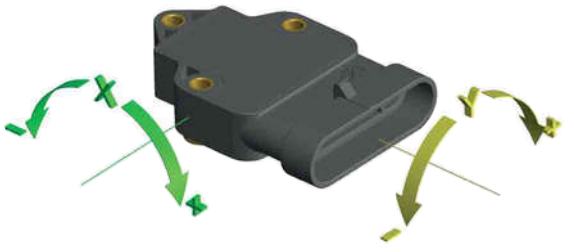

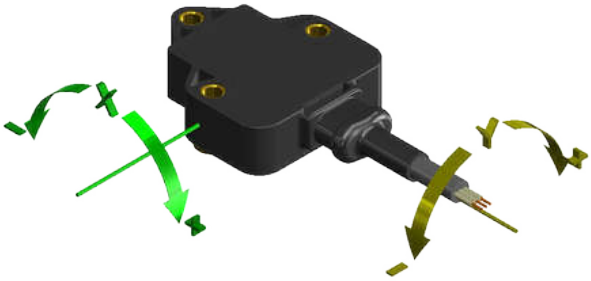

To activate **the Autozero function** make sure that:
- sensor is powered
- fixing surface is free of dust or grease
- sensor is fixed on the horizontal plane with suitable screws

ATTENTION!
The Autozero function can be defined **within a maximum range of +/- 4.5°** from the original zero position (factory set).

Hold the **magnetic pen** ① (accessory to order-PKIT312) to the **ZERO POINT** ◎ ZERO indicated on the product label ②.
Hold the position for **at least 3-5 seconds** so that the operation is successful.

①



②



FUNCTIONS: SENSOR OUTPUT GRAPH

DUAL AXIS TILT SENSOR (XY) - X AXIS

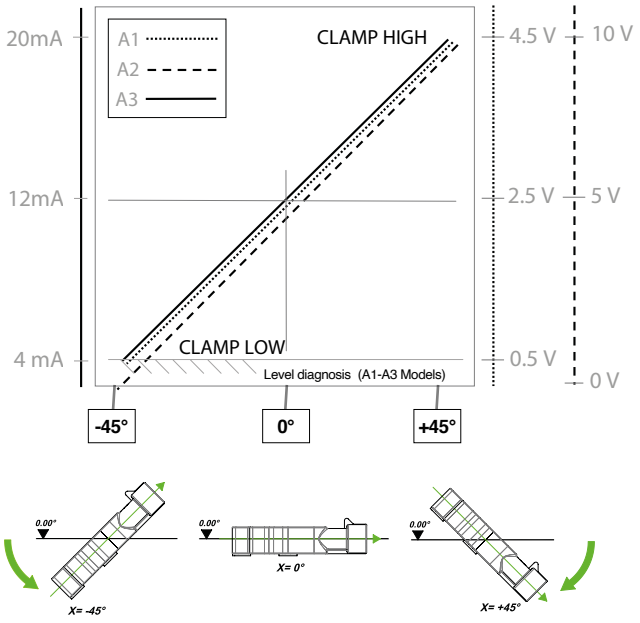

DUAL AXIS TILT SENSOR (XY) - Y AXIS

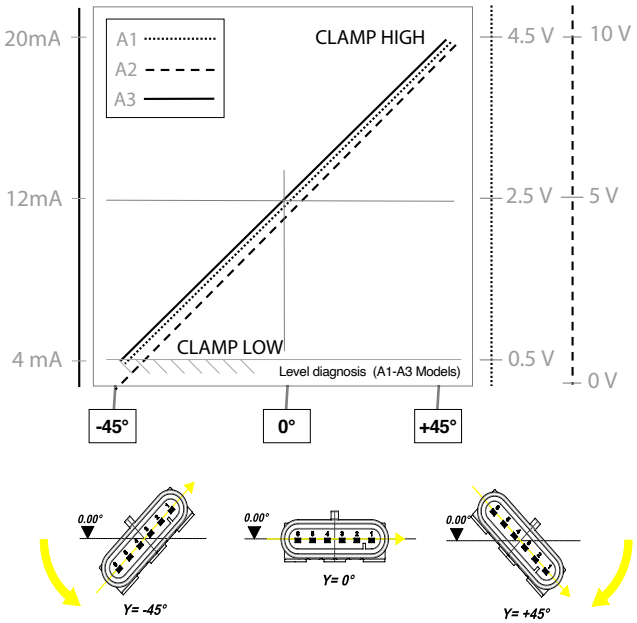

SINGLE AXIS TILT SENSOR (±180°) - Z AXIS

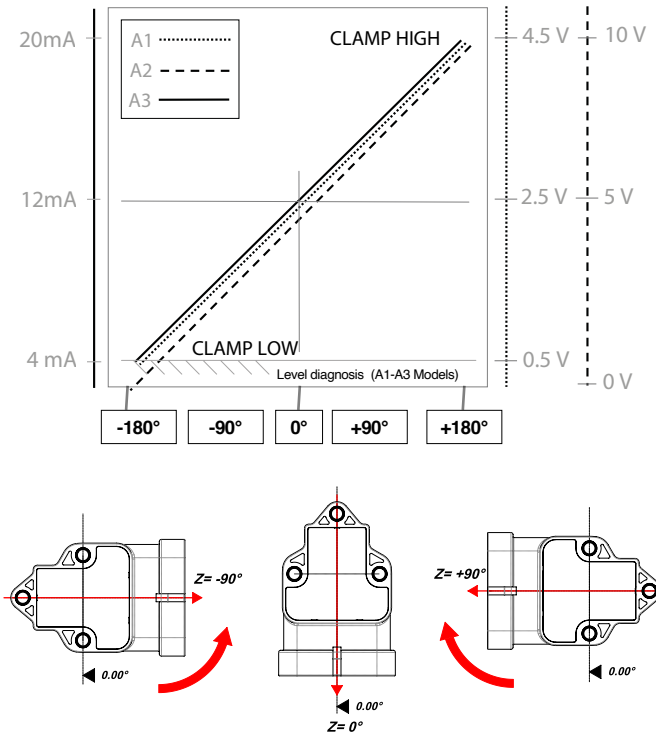

LOAD CONDITIONS

+0.5Vdc...+4.5 Vdc output with power +10...36Vdc and +0..10Vdc output with power +11..36Vdc: it is recommended a load resistance > 100 kohm

+0.5Vdc…+4.5 Vdc output with power +5 Vdc: it is recommended a load resistance > 100 kohm

+4...20 mA output with power < 15Vdc up to 10Vdc: the maximum load resistance is admissible 200 ohm

+4...20 mA output with power > 15Vdc up to 36Vdc: the maximum load resistance is admissible 500 ohm

ORDERING CODE

GIB - SINGLE/DUAL AXIS ENTRY LEVEL TILT SENSOR (XY/360°)

ELECTRICAL CONNECTIONS	
AMP Superseal 6P connector output	**A**
Cable output (specify cable length)	**F**

AXIS TYPE	
Dual axis (XY axis)	**O**
Single axis (Z axis)	**V**

MEASURING RANGE	
measuring range (indicate) ±10° ±15° ±20° ±30° ±45° ±60° ±85° (single axis Z for analogue output-dual axis XY); 360° (±180°) for single Z axis only	**XXX**

MEASURING RANGE (NOT available)	
(redundant option NOT available)	**000**

SUPPLY VOLTAGE	
+5Vdc (only for A1 output)	**L**
+10…+36Vdc (see output signal for right supply voltage)	**H**

OUTPUT TYPE	
+0.5…+4.5Vdc output (available with supply L = ratiometric output and with supply H = 0.5...4.5Vdc output)	**A1**
0...+10Vdc output (powered at +11...+36Vdc)	**A2**
4...20mA output (powered at +10...+36Vdc)	**A3**
CANopen output (powered at +10...+36Vdc)	**C1**

CABLE	
Cable without connector (always “0” in case of GIB-A version)	**0**
Cable (100mm) + M12 5 pin male overprinted connector	**1**

CERTIFICATE	
0	No certificate attached
L	Linearity curve to be attached

ACCESSORIES	
X	No accessories
Y	Magnetic pen **(PKIT312)**
A	3x spacers for redundant version **(BUS027)**

CABLE LENGTH	
01	cable 100 mm
02	cable 200 mm
05	cable 500 mm
10	cable 1 m
20	cable 2 m
---	other lengths on request

EXAMPLE OF DESCRIPTION: GIBFV360000HA30 0000X01

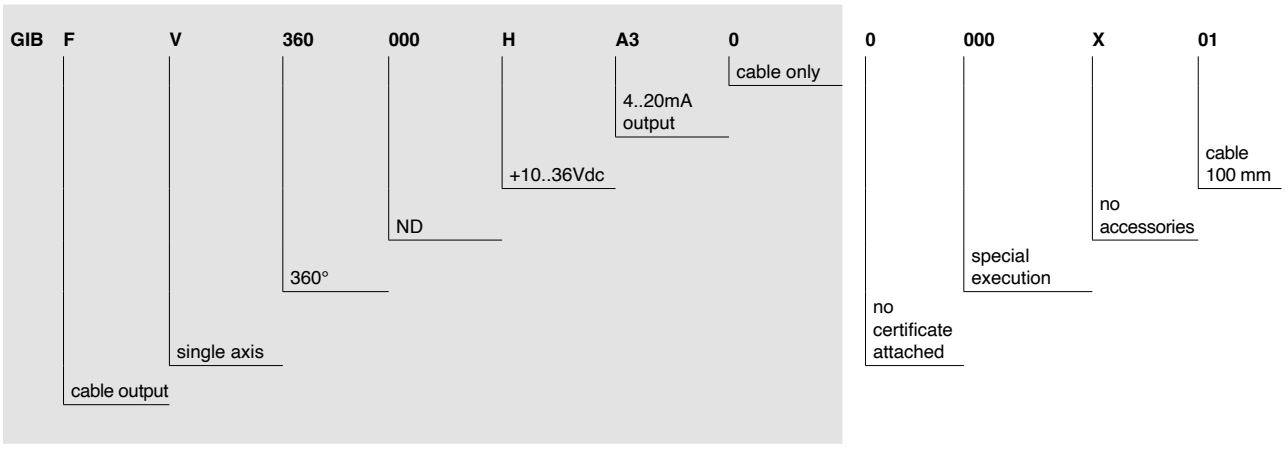

GEFRAN spa reserves the right to make any kind of design or functional modification at any moment without prior notice

GEFRAN spa
via Sebina, 74
25050 PROVAGLIO D’ISEO (BS) - ITALIA
tel. 0309888.1 - fax. 0309839063
Internet: http://www.gefran.com