TIH 220m

Large induction heater with a 300 kg bearing heating capacity

The large induction heater TIH 220m is a reliable and robust induction heater from the TIH...m range suitable for heating bearings up to a maximum weight of 300 kg *(660 lb)* and solid components up to a maximum weight of 150 kg *(330 lb)*. Advanced design of the power electronics including current and overheating control, combined with user friendly features such as sliding arms and remote control are standard to the TIH...m range.



- Capable of heating a 220 kg *(480 lb)* bearing in just 20 minutes
- Supplied standard with two yokes, allowing bearings with a bore diameter from 60 mm *(2.3 in.)* up to a maximum weight of 300 kg *(660 lb)* to be heated
- Sliding arm for large size yoke

Features and benefits

A Induction coil located outside the heater's housing enables a shorter heating time and lower energy consumption
B Foldable bearing support arms allow larger diameter bearings to be heated, and reduce the risk of the bearing toppling during heating
C Magnetic temperature probe, combined with a temperature mode pre-set at 110 °C *(230 °F)*, helps prevent bearing overheating
D Unique SKF remote control, with operating display and control panel, makes the heater easy and safe to use
E Internal yoke storage, for smaller yoke(s), reduces the risk of yoke damage or loss
F Integrated carrying handles allow for easy movement of the heater in the workshop
G Sliding or swivel arm allows for easy and quick bearing replacement, reducing operator fatigue (not for TIH 030m)

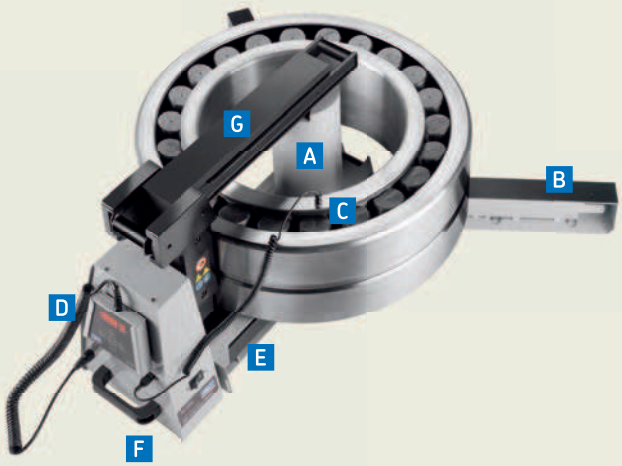

Technical data

Designation	TIH 220m
Max. bearing weight	300 kg *(662 lb)*
Bore diameter range	60–600 mm *(2.3–23.6 in.)*
Operating area (w × h)	250 × 255 mm *(9.8 × 10 in.)*
Coil diameter	140 mm *(5.5 in.)*
Standard yokes (included) to suit bearing/workpiece minimum bore diameter	100 mm *(3.9 in.)* 60 mm *(2.3 in.)*
Application example (bearing, weight, temperature, time)	23172 CC/W33, 220 kg, 110 °C, 20m
Max. power consumption	10,0–11,5 kVA (400–460 V)

Voltage [1]	
100–240 V/50–60 Hz	–
100–120 V/50–60 Hz	–
200–240 V/50–60 Hz	TIH 220m/LV
400–460 V/50–60 Hz	TIH 220m/MV
Temperature control [2]	20 to 250 °C *(68 to 482 °F)*
Demagnetisation according to SKF norms	<2 A/cm
Dimensions (w × d × h)	750 × 290 × 440 mm *(29.5 × 11.4 × 17.3 in.)*
Total weight (incl. yokes)	86 kg *(189 lb)*

SKF induction heater range

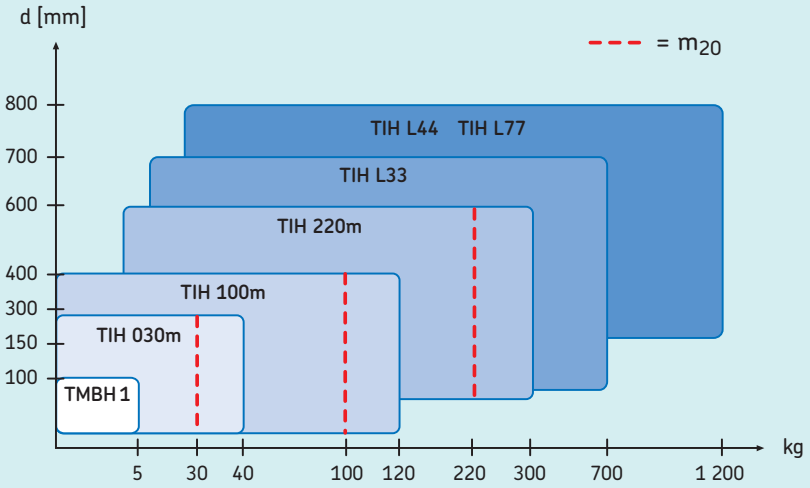

The comprehensive range of SKF induction heaters is suitable for most bearing heating applications. The chart gives general information on choosing an induction heater for bearing heating applications [3].

The SKF m_{20} concept represents the weight (kg) of the heaviest SKF spherical roller bearing of series 231 which can be heated from 20 to 110 °C *(68 to 230 °F)* in 20 minutes. This defines the heater's power output instead of its power consumption. Unlike other bearing heaters, there is a clear indication of how long it takes to heat a bearing, rather than just the maximum bearing weight possible.

[1] Some special voltage versions (e.g. 575V, 60 Hz CSA ready) are available for specific countries. For additional information, please contact your local SKF authorised distributor.
[2] Maximum heating temperature capacity depends on the weight and geometry of the bearing or workpiece. The heaters can achieve higher temperatures, please contact SKF for advice.
[3] For heating components other than bearings, SKF recommends consideration of TIH L MB series heater. Contact SKF to help you select a suitable induction heater for your application.

skf.com | mapro.skf.com | skf.com/lubrication

® SKF is a registered trademark of the SKF Group.

© SKF Group 2017
The contents of this publication are the copyright of the publisher and may not be reproduced (even extracts) unless prior written permission is granted. Every care has been taken to ensure the accuracy of the information contained in this publication but no liability can be accepted for any loss or damage whether direct, indirect or consequential arising out of the use of the information contained herein.

PUB MP/P8 14369/2 EN · August 2017