ABB machinery drives
ACS355, 0.37 to 22 kW / 0.5 to 30 hp

The ABB machinery drives are designed to be fast drives to install, parameter-set and commission. Thus saving hours of engineering work. They are highly compact and cost effective and equipped with cutting-edge intelligence and an innovative safety capability. The drives are designed specifically to meet the production and performance needs of system integrators, original equipment manufacturers (OEMs) and panel builders, as well as the requirements of end users in a broad range of applications.



Highlights

- Worldwide availability and service
- Exceptionally compact drives and uniform design
- Quick commissioning with application macros and panel assistants
- Safe torque-off function (SIL3) as standard
- Sensorless vector control for induction and permanent magnet motors
- Built-in brake chopper
- High protection class variants for demanding environments

Saving time in installation and commissioning

The drive's compact and uniform dimensions facilitate multiple drive solutions and cabinet installations. Different mounting options enable flexible installation in restricted spaces.

With the FlashDrop tool the drive can be pre-configured in seconds without powering the drive. The drive's application macros and assistants enable fast and easy commissioning.

Saving cost with cutting-edge intelligence and flexilibity

Up to eight pre-set sequences of operations can be created in minutes with the drive's PC tool to reduce the need for external PLC components. Versatile fieldbus connectivity to most PLCs on the market is also available. The drive includes Safe torque-off function as standard helping machine builders to fulfill the latest machinery directives.

Additional features include Speed Compensated Stop. This makes the drive ideal for material handling applications that require precision stopping that is independent of variations in process speed. For demanding environments high protection class variants are available in IP66/IP67/UL Type 4X classes that are NSF certified.

Power and voltage range

- 1-phase, 200 to 240 V ± 10%
  0.37 to 2.2 kW (0.5 to 3 hp)
- 3-phase, 200 to 240 V ± 10%
  0.37 to 11 kW (0.5 to 15 hp)
- 3-phase, 380 to 480 V ± 10%
  0.37 to 22 kW (0.5 to 30 hp)

Options

- Auxiliary I/O modules
  - MTAC pulse encoder interface
  - MREL module for additional relays
  - MPOW for external auxiliary power supply
- Fieldbus connection via optional modules
  - PROFIBUS DP
  - CANopen®
  - DeviceNet™
  - Modbus
  - Ethernet
  - Profinet
  - EtherCAT®
  - LonWorks®
- FlashDrop tool for fast pre-configuration without powering the drive
- DriveWindow Light PC tool for easy parameter setting and graphical sequence programming
- External EMC filters for category C2 compatibility
- Input chokes for IEC 61000-3-12 compatibility

Power and productivity
for a better world™

Technical data and types

IP20 UL open

Ratings			Type designation	Frame size	IP20 UL open			
P_N kW	P_N hp	I_{2N} A			H2 mm	W mm	D mm	Weight kg
1-phase AC supply, 200 to 240 V								
0.37	0.5	2.4	ACS355-01X-02A4-2	R0	202	70	161	1.1
0.75	1	4.7	ACS355-01X-04A7-2	R1	202	70	161	1.3
1.1	1.5	6.7	ACS355-01X-06A7-2	R1	202	70	161	1.3
1.5	2	7.5	ACS355-01X-07A5-2	R2	202	105	165	1.5
2.2	3	9.8	ACS355-01X-09A8-2	R2	202	105	165	1.5
3-phase AC supply, 200 to 240 V								
0.37	0.5	2.4	ACS355-03X-02A4-2	R0	202	70	161	1.1
0.55	0.75	3.5	ACS355-03X-03A5-2	R0	202	70	161	1.1
0.75	1	4.7	ACS355-03X-04A7-2	R1	202	70	161	1.3
1.1	1.5	6.7	ACS355-03X-06A7-2	R1	202	70	161	1.3
1.5	2	7.5	ACS355-03X-07A5-2	R1	202	70	161	1.3
2.2	3	9.8	ACS355-03X-09A8-2	R2	202	105	165	1.5
3	4	13.3	ACS355-03X-13A3-2	R2	202	105	165	1.5
4	5	17.6	ACS355-03X-17A6-2	R2	202	105	165	1.5
5.5	7.5	24.4	ACS355-03X-24A4-2	R3	202	169	169	2.5
7.5	10	31	ACS355-03X-31A0-2	R4	202	260	169	4.4
11	15	46.2	ACS355-03X-46A2-2	R4	202	260	169	4.4
3-phase AC supply, 380 to 480 V								
0.37	0.5	1.2	ACS355-03X-01A2-4	R0	202	70	161	1.1
0.55	0.75	1.9	ACS355-03X-01A9-4	R0	202	70	161	1.1
0.75	1	2.4	ACS355-03X-02A4-4	R1	202	70	161	1.3
1.1	1.5	3.3	ACS355-03X-03A3-4	R1	202	70	161	1.3
1.5	2	4.1	ACS355-03X-04A1-4	R1	202	70	161	1.3
2.2	3	5.6	ACS355-03X-05A6-4	R1	202	70	161	1.3
3	4	7.3	ACS355-03X-07A3-4	R1	202	70	161	1.3
4	5	8.8	ACS355-03X-08A8-4	R1	202	70	161	1.3
5.5	7.5	12.5	ACS355-03X-12A5-4	R3	202	169	169	2.5
7.5	10	15.6	ACS355-03X-15A6-4	R3	202	169	169	2.5
11	15	23.1	ACS355-03X-23A1-4	R3	202	169	169	2.5
15	20	31	ACS355-03X-31A0-4	R4	202	260	169	4.4
18.5	25	38	ACS355-03X-38A0-4	R4	202	260	169	4.4
22	30	44	ACS355-03X-44A0-4	R4	202	260	169	4.4

IP66/IP67/UL Type 4X

Ratings			Type designation	Frame size	IP66/IP67/UL Type 4X			
P_N kW	P_N hp	I_{2N} A			H mm	W mm	D mm	Weight kg
3-phase AC supply, 200 to 240 V								
0.37	0.5	2.4	ACS355-03X-02A4-2 + B063	R1	305	195	281	7.7
0.55	0.75	3.5	ACS355-03X-03A5-2 + B063	R1	305	195	281	7.7
0.75	1	4.7	ACS355-03X-04A7-2 + B063	R1	305	195	281	7.7
1.1	1.5	6.7	ACS355-03X-06A7-2 + B063	R1	305	195	281	7.7
1.5	2	7.5	ACS355-03X-07A5-2 + B063	R1	305	195	281	7.7
2.2	3	9.8	ACS355-03X-09A8-2 + B063	R3	436	246	277	13
3	4	13.3	ACS355-03X-13A3-2 + B063	R3	436	246	277	13
4	5	17.6	ACS355-03X-17A6-2 + B063	R3	436	246	277	13
3-phase AC supply, 380 to 480 V								
0.37	0.5	1.2	ACS355-03X-01A2-4 + B063	R1	305	195	281	7.7
0.55	0.75	1.9	ACS355-03X-01A9-4 + B063	R1	305	195	281	7.7
0.75	1	2.4	ACS355-03X-02A4-4 + B063	R1	305	195	281	7.7
1.1	1.5	3.3	ACS355-03X-03A3-4 + B063	R1	305	195	281	7.7
1.5	2	4.1	ACS355-03X-04A1-4 + B063	R1	305	195	281	7.7
2.2	3	5.6	ACS355-03X-05A6-4 + B063	R1	305	195	281	7.7
3	4	7.3	ACS355-03X-07A3-4 + B063	R1	305	195	281	7.7
4	5	8.8	ACS355-03X-08A8-4 + B063	R1	305	195	281	7.7
5.5	7.5	12.5	ACS355-03X-12A5-4 + B063	R3	436	246	277	13
7.5	10	15.6	ACS355-03X-15A6-4 + B063	R3	436	246	277	13

X within the type code stands for E or U.
E = EMC filter connected. U = EMC filter disconnected.
H2 = Height with fastenings but without clamping plate.
H = Height, W = Width, D = Depth
B063 = IP66/IP67/UL Type 4X enclosure

Mains connection	
Voltage and power connection	1-phase, 200 to 240 V ±10%: 0.37 to 2.2 kW (0.5 to 3 hp) 3-phase, 200 to 240 V ±10%: 0.37 to 11 kW (0.5 to 15 hp) 3-phase, 380 to 480 V ±10%: 0.37 to 22 kW (0.5 to 10 hp)
Frequency	48 to 63 Hz
Motor connection	
Voltage	3-phase, from 0 to U_{SUPPLY}
Frequency	0 to 599 Hz
Overload capacity	1.5 x I_{2N} for 1 minute every 10 minutes At start 1.8 x I_{2N} for 2 seconds
Switching frequency	4 (default) to16 kHz with 4 kHz steps
Parameter-enabled noise cancellation function	
Programmable control connections	
Two analog inputs, signal selectable	
Voltage signal	+ 10 V, 0 (2) to 10 V
Current signal	±20 mA, 0 (4) to 20 mA
One analog output	0 (4) to 20 mA
Five digital inputs	12 to 24 V, PNP and NPN, programmable DI5 0 to 16 kHz pulse train
One relay output	NO + NC, 250 V AC/2 A, 30 V DC/0.5 A
One digital output	Transistor output, 30 V DC/100 mA, programmable 10 Hz to 16 kHz pulse train
Accuracy	24 V DC ±10%, max. 200 mA
Environmental limits	
Ambient temperature	-10 to 40 °C (14 to 104 °F), no frost allowed 50 °C (122 °F) with 10% derating
Relative humidity	Lower than 95% (without condensation)

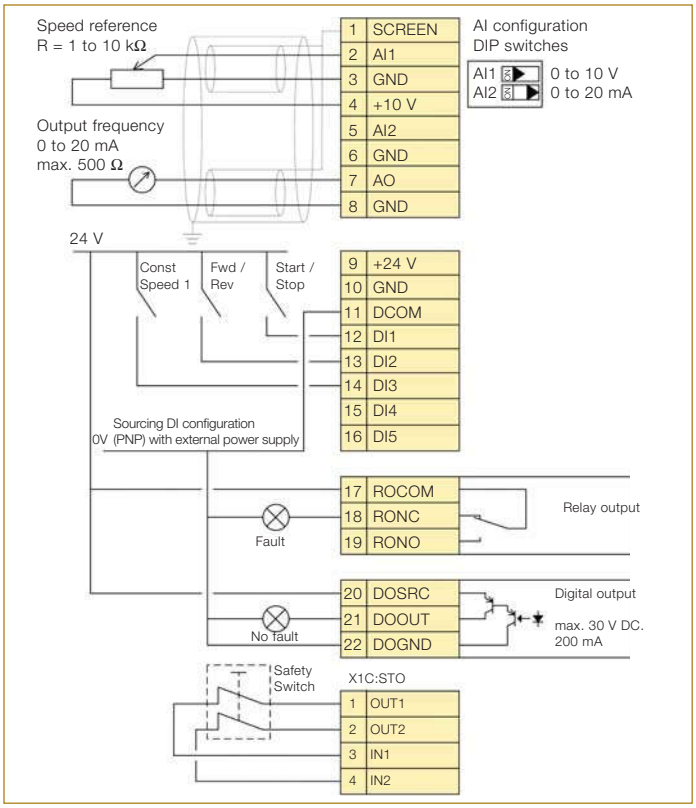

Figure 1. Inputs and outputs configuration based on ABB standard macro and external digital input supply voltage.

For more information please contact your local ABB representative or visit:

www.abb.com/drives
www.abb.com/drivespartners

© Copyright 2013 ABB. All rights reserved. Specifications subject to change without notice.

Power and productivity for a better world™

3AUA0000068579 REV B EN 27.3.2013 #116747