ISO 15552, series CCL-IS



AVENTICS™ ISO 15552, series CCL-IS

EMERSON.

ISO 15552, series CCL-IS

- ISO 15552
- Ø 25-125 mm
- Ports G 1/8 G 1/4 G 3/8 G 1/2
- double-acting
- with magnetic piston
- Cushioning pneumatically adjustable
- Piston rod External thread
- ATEX optional
- suitable for use in food processing
- Optionally heat-resistant



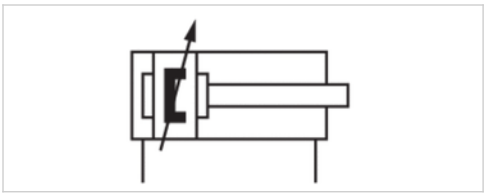

Standards	ISO 15552
Certificates	ATEX optional
Compressed air connection	Internal thread
Working pressure min./max.	1,5 ... 10 bar
Ambient temperature min./max.	-20 ... 80 °C
Medium temperature min./max.	-20 ... 80 °C
Medium	Compressed air
Max. particle size	50 µm
Oil content of compressed air	0 ... 5 mg/m³
Pressure for determining piston forces	6.3 bar

Technical data

Piston Ø Piston rod thread Ports Piston rod Ø	25 mm M10x1,25 G 1/8 12 mm	32 mm M10x1,25 G 1/8 12 mm	40 mm M12x1,25 G 1/4 16 mm	50 mm M16x1,5 G 1/4 20 mm	63 mm M16x1,5 G 3/8 20 mm	80 mm M20x1,5 G 3/8 25 mm
Stroke 25	R480671114	R480060005	R480060018	R480060026	R480060036	R480060060
50	R480671115	R480058830	R480059528	R480060027	R480058890	R480060061
80	R480671116	R480060006	R480060019	R480060028	R480060037	R480060063
100	R480671117	R480059075	R480060020	R480060029	R480060038	R480060064
125	R480671118	R480060007	R480060021	R480060030	R480060039	R480059699
160	R480671119	R480060008	R480059526	R480060031	R480060040	R480060065
200	R480671120	R480060009	R480060022	R480060032	R480060041	R480059532
250	R480671121	R480060010	R480060023	R480060033	R480060043	R480060066
320	R480671122	R480060011	R480060024	R480060034	R480060042	R480060067
400	R480671123	R480060012	R480059529	R480058941	R480060044	R480060068
500	R480671124	R480060013	R480060025	R480060035	R480060045	R480060069

Piston Ø Piston rod thread Ports Piston rod Ø	100 mm M20x1,5 G 1/2 25 mm	125 mm M27x2 G 1/2 32 mm
Stroke 25	R480060070	R480060080
50	R480060071	R480060081
80	R480060072	R480060082
100	R480060073	R480060083
125	R480060074	R480060084
160	R480060075	R480060085
200	R480060076	R480060086
250	R480058909	R480060087
320	R480060077	R480140649
400	R480060078	R480060089
500	R480060079	R480060091

Technical data

Piston Ø	25 mm	32 mm	40 mm	50 mm	63 mm	80 mm	100 mm
Retracting piston force	260 N	435 N	665 N	1039 N	1766 N	2857 N	4639 N
Extracting piston force	309 N	507 N	792 N	1237 N	1964 N	3167 N	4948 N
Cushioning length	11 mm	16,5 mm	19 mm	17 mm	16,5 mm	19,5 mm	19,5 mm
Cushioning energy	2,3 J	4,8 J	9 J	15 J	27 J	54 J	88 J
Weight 0 mm stroke	0,33 kg	0,61 kg	0,92 kg	1,37 kg	1,77 kg	3,23 kg	4,42 kg
Weight +10 mm stroke	0,025 kg	0,036 kg	0,049 kg	0,065 kg	0,076 kg	0,081 kg	0,133 kg
Stroke max.	1500 mm	1600 mm	1900 mm	2100 mm	2500 mm	2800 mm	2800 mm

Piston Ø	125 mm
Retracting piston force	7224 N
Extracting piston force	7731 N
Cushioning length	22 mm
Cushioning energy	140 J
Weight 0 mm stroke	6,69 kg
Weight +10 mm stroke	0,127 kg
Stroke max.	2750 mm

Technical information

The pressure dew point must be at least 15 °C under ambient and medium temperature and may not exceed 3 °C .
Ø25 not according to ISO 15552
The material for heat-resistant scraper and seal variants (ambient temperature: -10 °C ... 120 °C) is PTFE.

Further options can be generated in the Internet configurator.
ATEX-certified cylinders with identification II 2G Ex h IIC T4 Gb / II 2D Ex h IIIC T135°C Db_X can be generated in the Internet configurator.
The operating temperature range for ATEX-certified cylinders is -20°C ... 60°C.
Ø25 not according to ISO 15552

Technical information

Material	
Cylinder tube	Aluminum, anodized
Piston rod	Stainless steel
Front cover	Aluminum, anodized
End cover	Aluminum, anodized
Scraper	Polyester
Tie-rods	Stainless steel
Grease	AGF (NSF-H1)

Dimensions

Dimensions

Ø 25 - 63

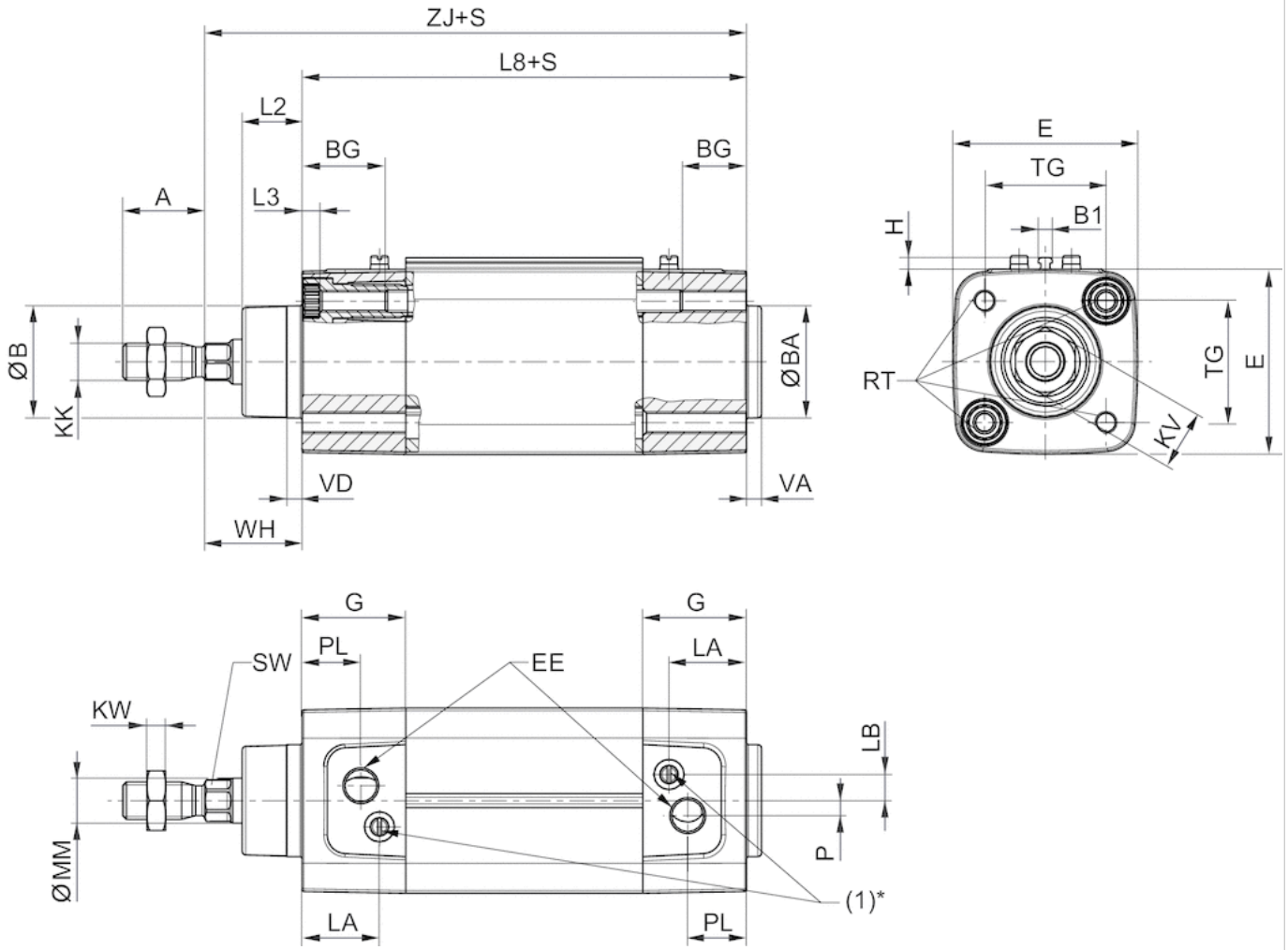

S = stroke

* The flow control screw (1) only has a function in cylinders with adjustable cushioning.

Ø80 - 125

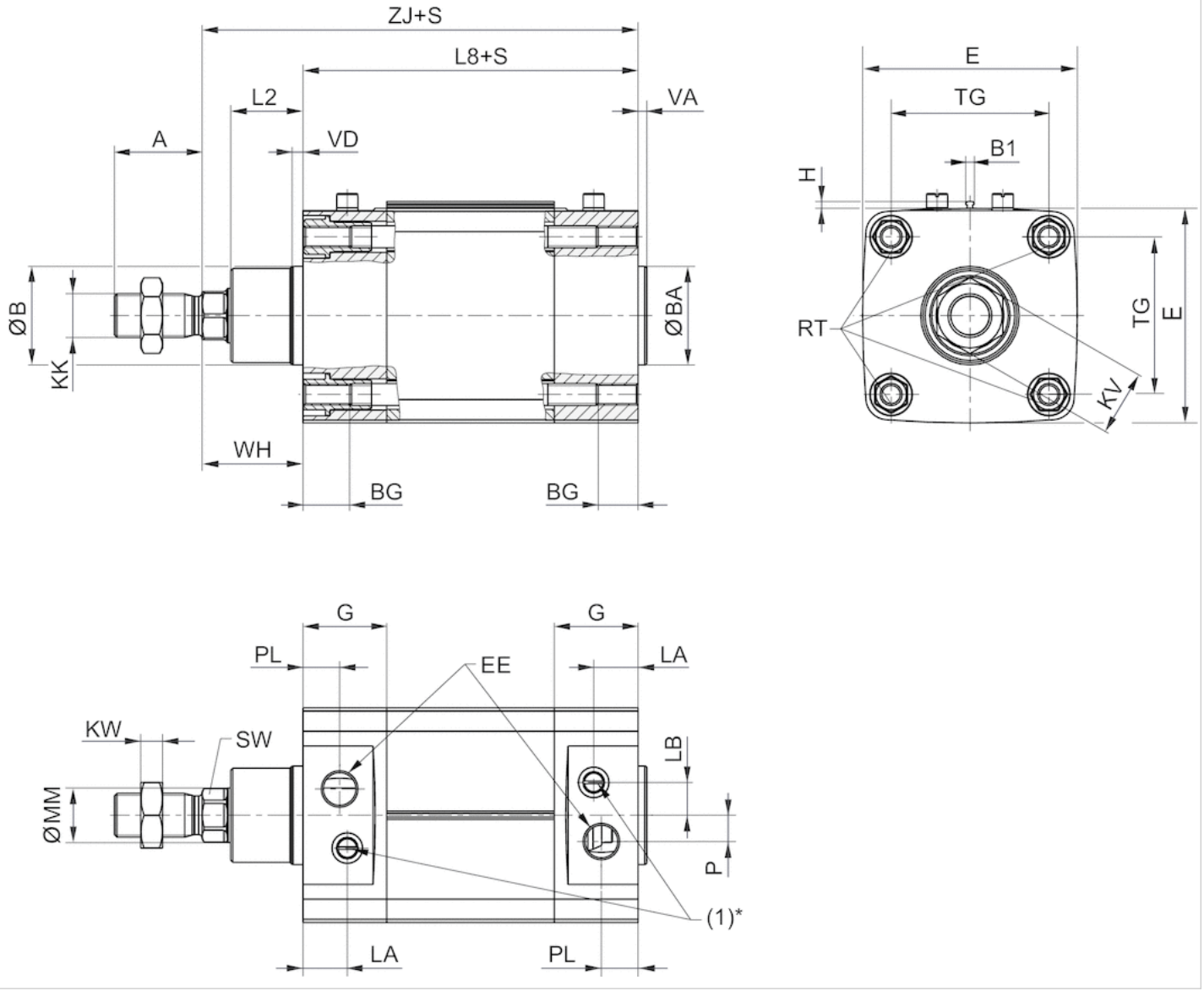

S = stroke

* The flow control screw (1) only has a function in cylinders with adjustable cushioning.

Dimensions

Piston Ø	A	ØB / ØBA d11	B1	BG mm	E	EE	G	H	KK	KV	KW	L2	L3 max.
25 mm	22	24	3.8	12.5	40.5	G1/8	20	3.1	M10x1,25	16	5	16	5
32 mm	22	30	3.8	16	49.5	G1/8	27.75	3.1	M10x1,25	16	5	16	5
40 mm	24	35	3.8	16	57.5	G1/4	33.25	3.1	M12x1,25	18	6	18.25	5
50 mm	32	40	3.8	16	69.5	G1/4	31	3.1	M16x1,5	24	8	25	5
63 mm	32	45	3.8	16	79.5	G3/8	38,25	3.1	M16x1,5	24	8	25	5
80 mm	40	45	3.8	17	98	G3/8	38,25	3.1	M20x1,5	30	10	33	-
100 mm	40	55	3.8	17	115,5	G1/2	42,25	3.1	M20x1,5	30	10	36	-
125 mm	54	60	3.8	20	145	G1/2	54	3.1	M27x2	41	13,5	45	-

Piston Ø	L8	LA	LB	MM f8	P	PL	RT	SW	TG	VA	VD	WH	ZJ
25 mm	74 ±0,4	13.5	6	12	4.5	10.3	M5	10	26 ±0,4	-	-	24 ±1,4	98
32 mm	94 ±0,4	20.75	7	12	4	15.75	M6	10	32,5 ±0,5	4	4	26 ±1,4	120
40 mm	105 ±0,7	22.75	8	16	5	16.75	M6	13	38 ±0,5	4	5	30 ±1,4	135
50 mm	106 ±0,7	20	12	20	7,7	16	M8	17	46,5 ±0,6	4	5	37 ±1,4	143
63 mm	121 ±0,8	27,25	11	20	11	19,25	M8	17	56,5 ±0,7	4	5	37 ±1,8	158
80 mm	128 ±0,8	20,25	15	25	12	16,75	M10	22	72 ±0,7	4	5	46 ±1,8	174
100 mm	138 ±1	24,25	14	25	17	19,25	M10	22	89 ±0,7	4	5	51 ±1,8	189
125 mm	160 ±1	25,5	4	32	27,5	20	M12	27	110 ±1,1	6	6	65 ±2,2	225

Diagrams

Cushioning diagram

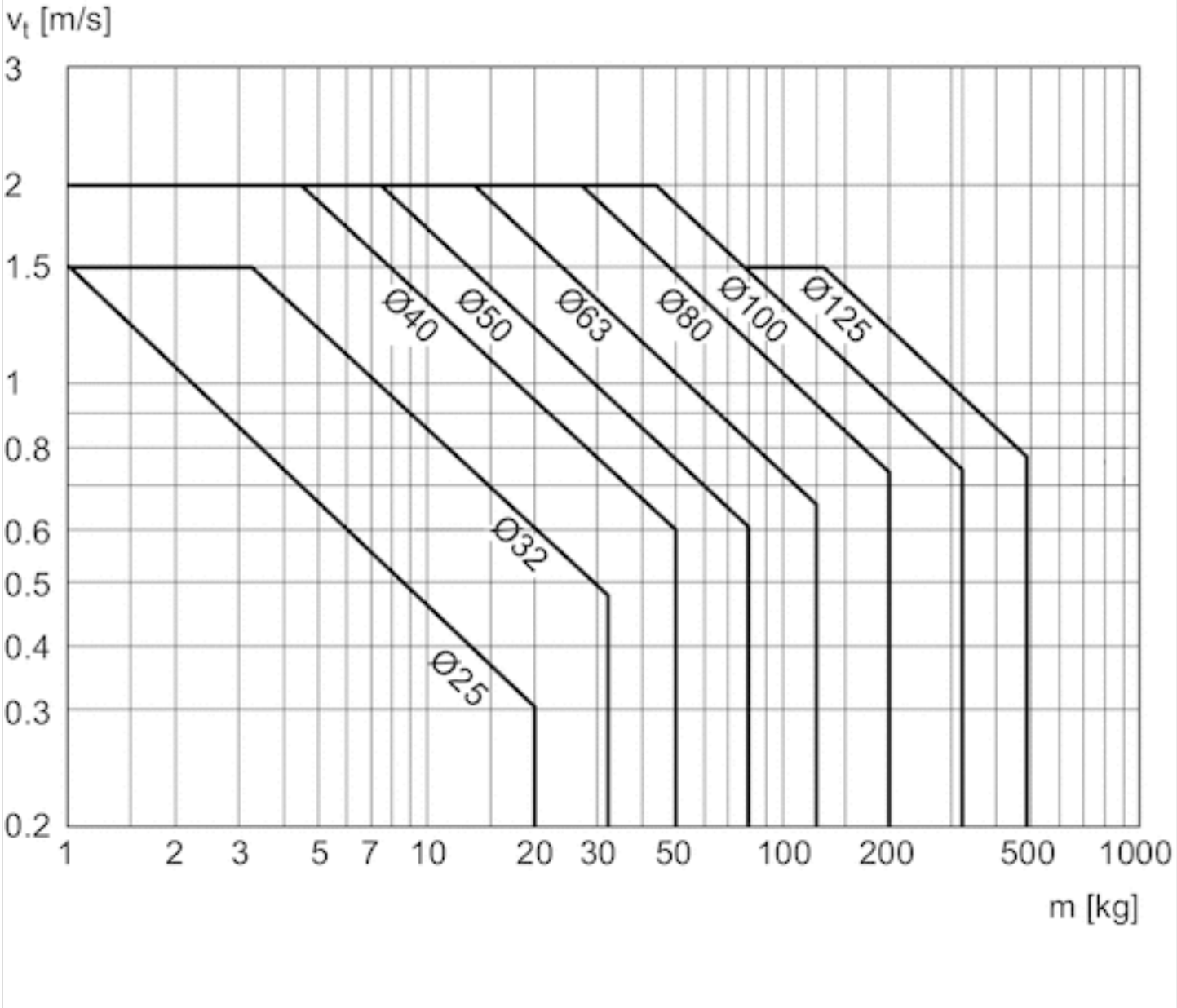

V = velocity [m/s]
m = mass

Accessories overview

Overview drawing

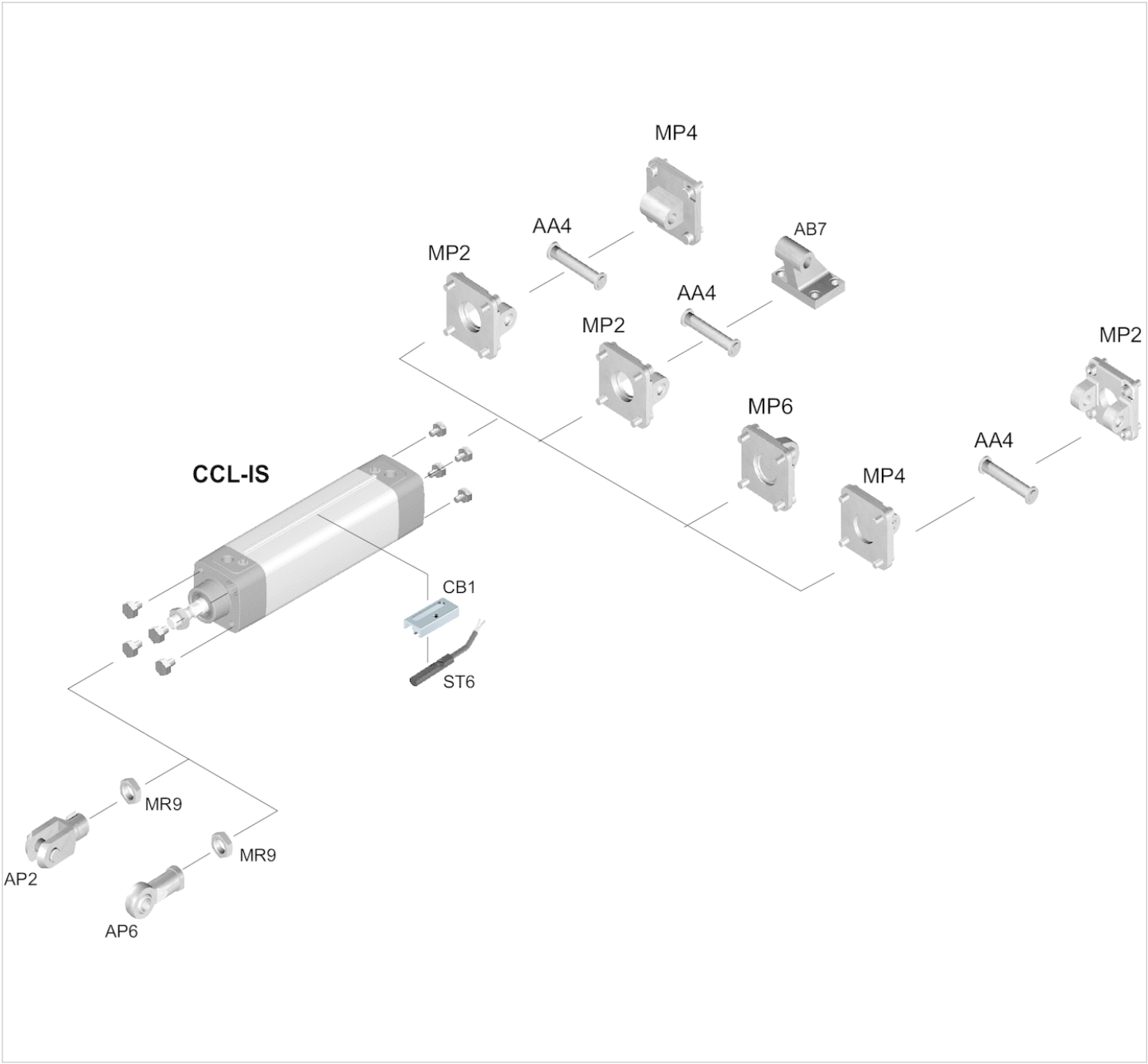

NOTE:
This overview drawing is only for orientation to indicate where the various accessory parts can be fastened to the cylinder. The illustration has been simplified for this purpose. It is thus not possible to derive the dimensions from this overview.

ISO 15552, series CCL-IS

- ISO 15552
- Ø 32-125 mm
- Ports G 1/8 G 1/4 G 3/8 G 1/2
- double-acting
- with magnetic piston
- Cushioning pneumatically adjustable
- Piston rod External thread
- Piston rod through
- ATEX optional
- suitable for use in food processing
- Optionally heat-resistant



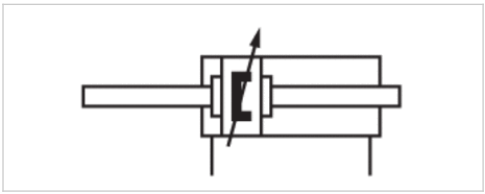

Standards	ISO 15552
Certificates	ATEX optional
Compressed air connection	Internal thread
Working pressure min./max.	1,5 ... 10 bar
Ambient temperature min./max.	-20 ... 80 °C
Medium temperature min./max.	-20 ... 80 °C
Medium	Compressed air
Max. particle size	50 µm
Oil content of compressed air	0 ... 5 mg/m³
Pressure for determining piston forces	6.3 bar

Technical data

Piston Ø Piston rod thread Ports Piston rod Ø	32 mm M10x1,25 G 1/8 12 mm	40 mm M12x1,25 G 1/4 16 mm	50 mm M16x1,5 G 1/4 20 mm	63 mm M16x1,5 G 3/8 20 mm	80 mm M20x1,5 G 3/8 25 mm	100 mm M20x1,5 G 1/2 25 mm
Stroke 25	R480193041	R480193160	R480140572	R480161345	R480193182	R480193187
50	R480164229	R480191357	R480178656	R480192685	R480190899	R480193188
80	R480189168	R480193161	R480193169	R480140270	R480193183	R480193189
100	R480181243	R480193162	R480178406	R480193176	R480140266	R480173536
125	R480193155	R480193163	R480140573	R480068035	R480178891	R480193190
160	R480156543	R480193164	R480193170	R480193177	R480183597	R480193191
200	R480193156	R480193165	R480193171	R480153420	R480193184	R480193192
250	R480185615	R480190116	R480193172	R480193178	R480174928	R480179848
320	R480193157	R480193166	R480193173	R480193179	R480193185	R480193193
400	R480193158	R480193167	R480193174	R480193180	R480189967	R480193194
500	R480193159	R480193168	R480193175	R480193181	R480193186	R480193195

Piston Ø Piston rod thread Ports Piston rod Ø	125 mm M27x2 G 1/2 32 mm
Stroke 25	R480193196
50	R480193200
80	R480193201
100	R480193202
125	R480178609
160	R480193203
200	R480193204
250	R480193205
320	R480193206
400	R480193207
500	R480193208

Technical data

Piston Ø	32 mm	40 mm	50 mm
Retracting piston force	435 N	665 N	1039 N
Cushioning length	11,5 mm	15 mm	17 mm
Cushioning energy	4,8 J	9 J	15 J
Weight 0 mm stroke	0,71 kg	1,11 kg	1,72 kg
Weight +10 mm stroke	0,046 kg	0,067 kg	0,09 kg
Material, front cover	Aluminum anodized	Aluminum anodized	Aluminum anodized
Stroke max.	1500 mm	1500 mm	1500 mm

Piston Ø	63 mm	80 mm	100 mm
Retracting piston force	1766 N	2857 N	4639 N
Cushioning length	16,5 mm	19,5 mm	19,5 mm
Cushioning energy	27 J	54 J	88 J
Weight 0 mm stroke	2,15 kg	3,95 kg	5,25 kg
Weight +10 mm stroke	0,105 kg	0,14 kg	0,193 kg
Material, front cover	Aluminum anodized	Aluminum anodized	Aluminum anodized
Stroke max.	1500 mm	1500 mm	1500 mm

Piston Ø	125 mm
Retracting piston force	7224 N
Cushioning length	22 mm
Cushioning energy	140 J
Weight 0 mm stroke	8,92 kg
Weight +10 mm stroke	0,22 kg
Material, front cover	Aluminum anodized
Stroke max.	1500 mm

Technical information

The pressure dew point must be at least 15 °C under ambient and medium temperature and may not exceed 3 °C .
ATEX-certified cylinders with identification II 2G Ex h IIC T4 Gb / II 2D Ex h IIIC T135°C Db_X can be generated in the Internet configurator.
The material for heat-resistant scraper and seal variants (ambient temperature: -10 °C ... 120 °C) is PTFE.

Further options can be generated in the Internet configurator.

Technical information

Material	
Cylinder tube	Aluminum, anodized
Piston rod	Stainless steel
Front cover	Aluminum, anodized Die-cast aluminum, anodized
End cover	Aluminum, anodized Die-cast aluminum, anodized
Scraper	Polyester
Tie-rods	Stainless steel
Grease	AGF (NSF-H1)

Dimensions

Dimensions

Ø 32 - 63

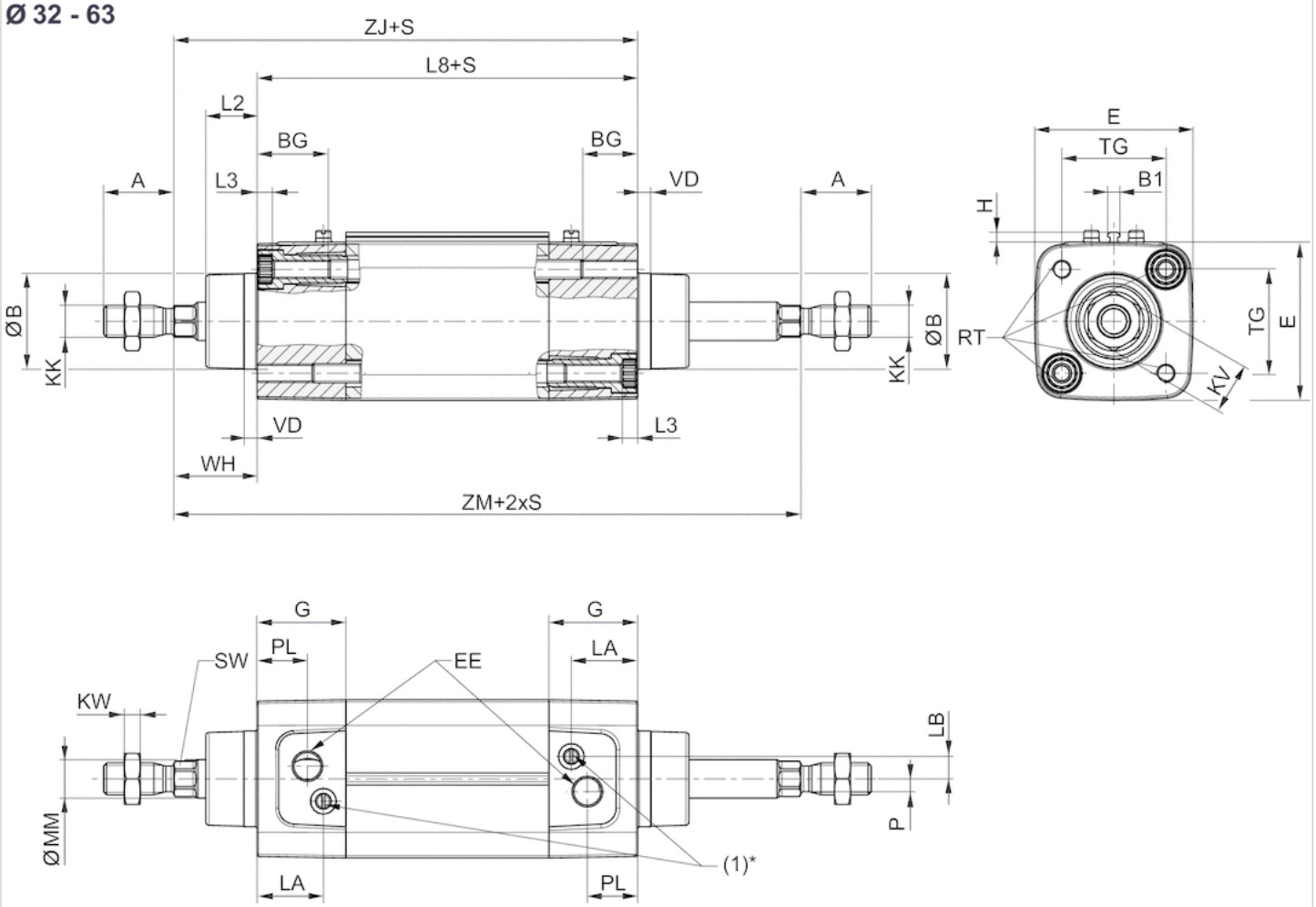

S = stroke

* The flow control screw (1) only has a function in cylinders with adjustable cushioning.

Ø80 - 125

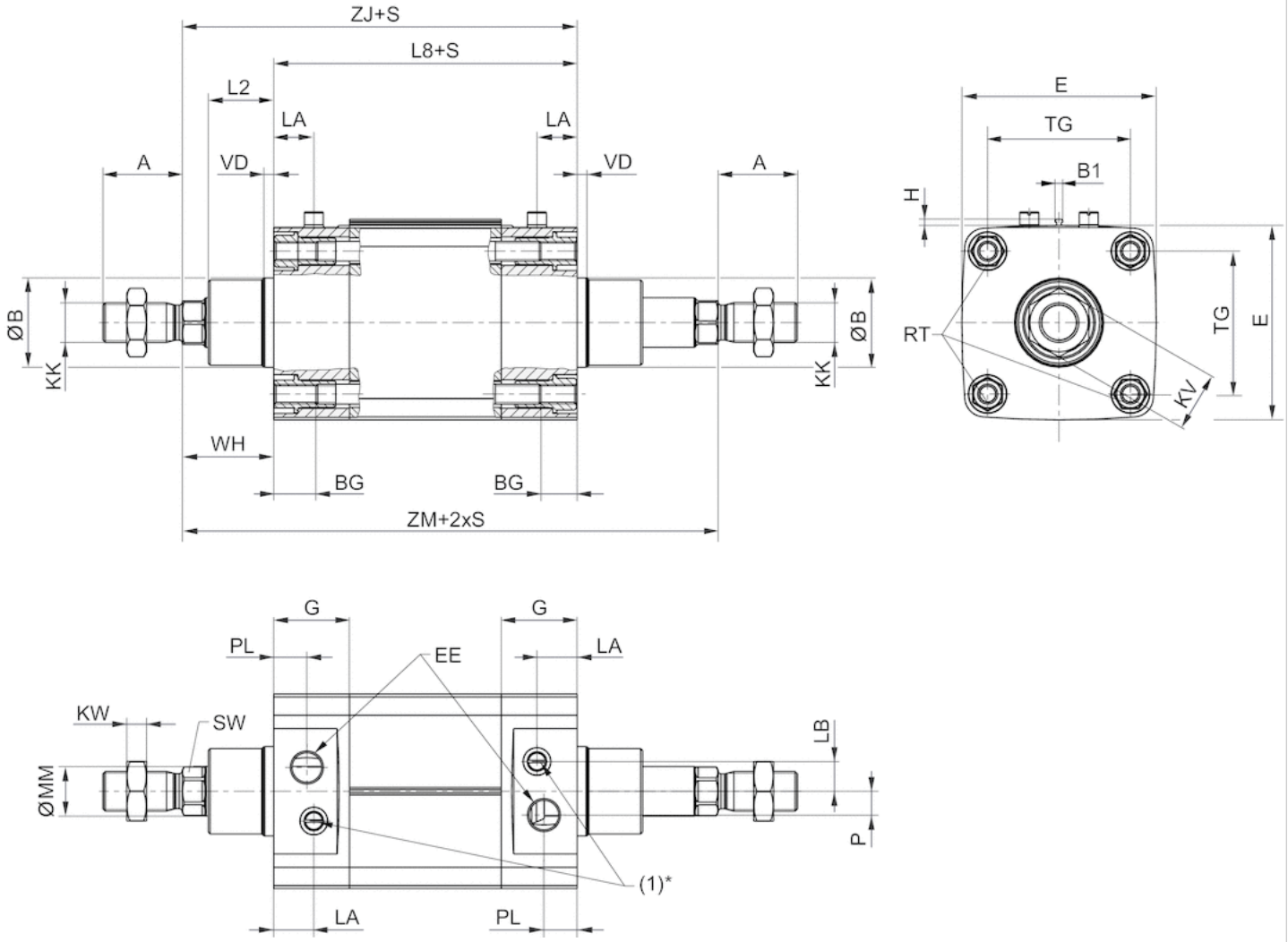

S = stroke
* The flow control screw (1) only has a function in cylinders with adjustable cushioning.

Dimensions

Piston Ø	A	ØB / ØBA d11	B1	BG min.	E	EE	G	H	KK	KV	KW	L2	L3 max.
32 mm	22	30	3.8	16	49.5	G1/8	27.75	3.1	M10x1,25	16	5	16	5
40 mm	24	35	3.8	16	57.5	G1/4	33.25	3.1	M12x1,25	18	6	18.25	5
50 mm	32	40	3.8	16	69.5	G1/4	31	3.1	M16x1,5	24	8	25	5
63 mm	32	45	3.8	16	79.5	G3/8	38.25	3.1	M16x1,5	24	8	25	5
80 mm	40	45	3.8	17	98	G3/8	38.25	3.1	M20x1,5	30	10	33	-
100 mm	40	55	3.8	17	115.5	G1/2	42.25	3.1	M20x1,5	30	10	36	-
125 mm	54	60	3.8	20	145	G1/2	54	3.1	M27x2	41	13.5	45	-

Piston Ø	L8	LA	LB	MM f8	P	PL	RT	SW	TG	VA	VD	WH	ZJ	ZM
32 mm	94 ±0,4	20.75	7	12	4	15.75	M6	10	32,5 ±0,5	4	4	26 ±1,4	120	146
40 mm	105 ±0,7	22.75	8	16	5	16.75	M6	13	38 ±0,5	4	5	30 ±1,4	135	165
50 mm	106 ±0,7	20	12	20	7.7	16	M8	17	46,5 ±0,6	4	5	37 ±1,4	143	180
63 mm	121 ±0,8	27.25	11	20	11	19.25	M8	17	56,5 ±0,7	4	5	37 ±1,8	158	195
80 mm	128 ±0,8	20.25	15	25	12	16.75	M10	22	72 ±0,7	4	5	46 ±1,8	174	220
100 mm	138 ±1	24.25	14	25	17	19.25	M10	22	89 ±0,7	4	5	51 ±1,8	189	240
125 mm	160 ±1	25.5	4	32	27.5	20	M12	27	110 ±1,1	6	6	65 ±2,2	225	290

Diagrams

Cushioning diagram

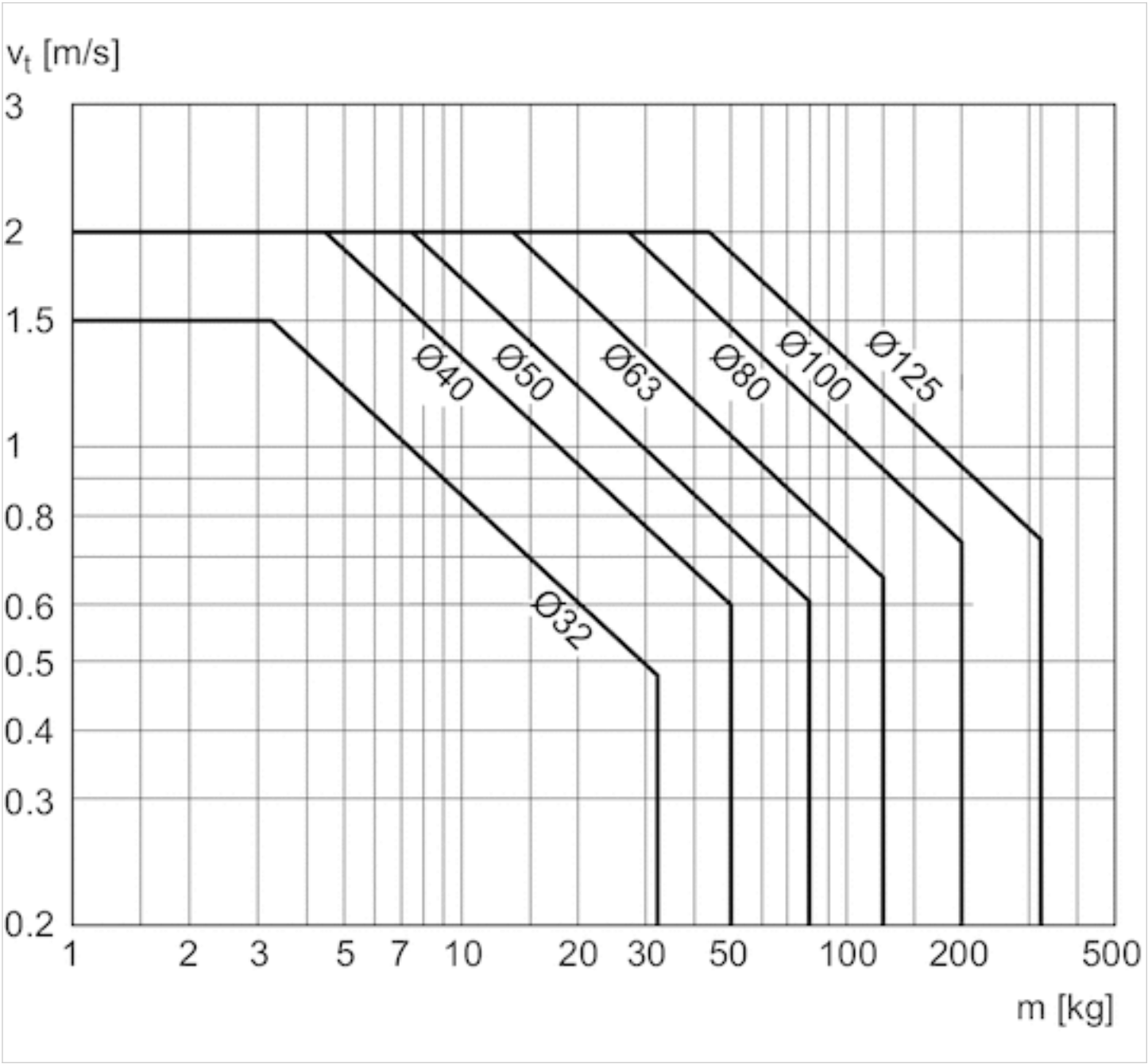

V = velocity [m/s]
m = mass

Accessories overview

Overview drawing

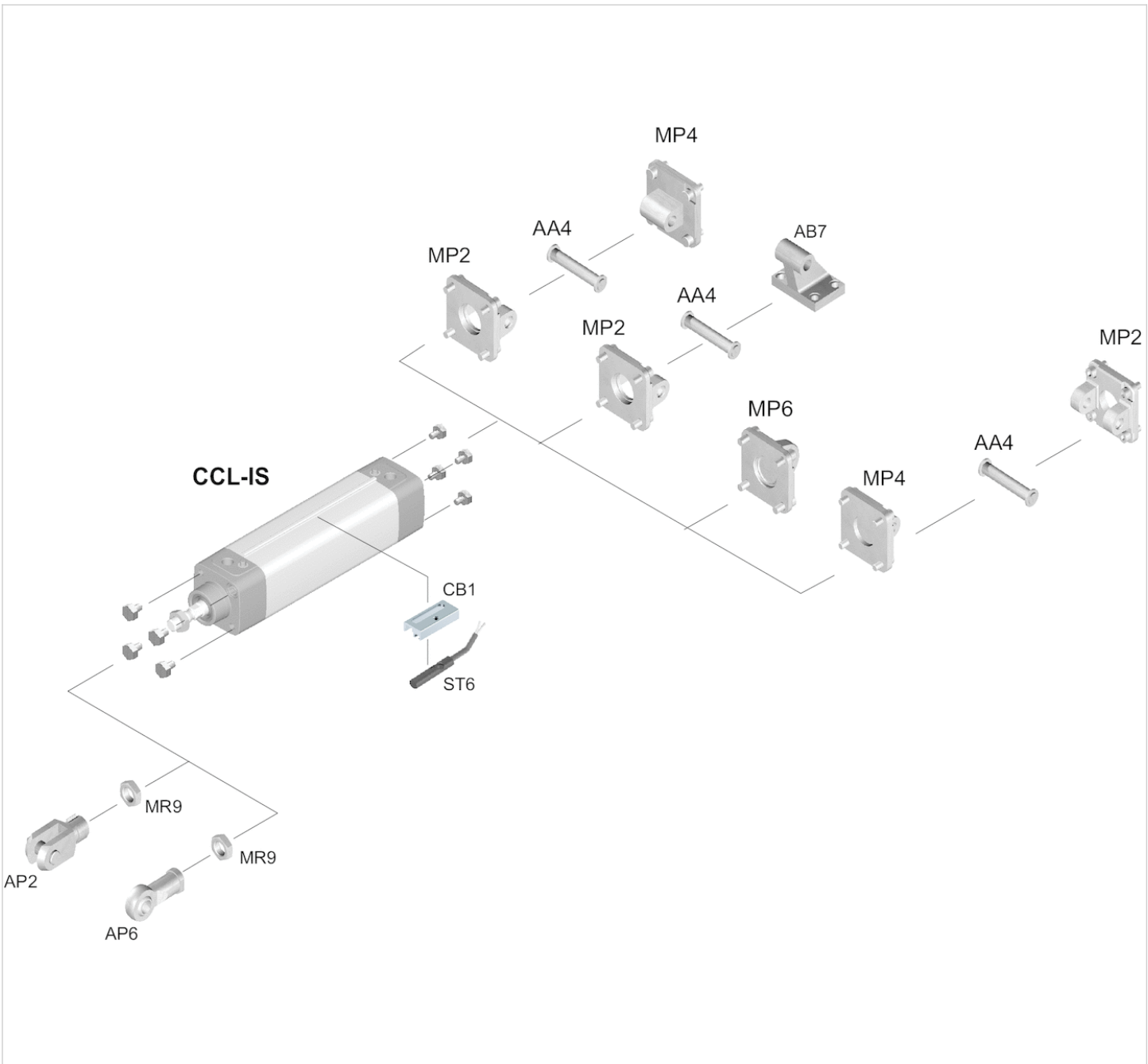

NOTE:
This overview drawing is only for orientation to indicate where the various accessory parts can be fastened to the cylinder. The illustration has been simplified for this purpose. It is thus not possible to derive the dimensions from this overview.

ISO 15552, CCL-IS-MS series

- Modular scraper system
- ISO 15552
- Ø 32-125 mm



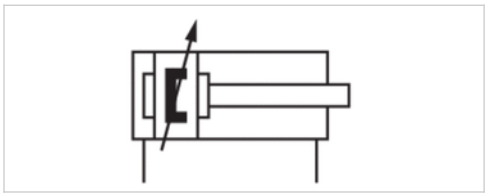

Standards

ISO 15552

For additional technical data please see the relevant data sheets for the standard version.

Technical information

The pressure dew point must be at least 15 °C under ambient and medium temperature and may not exceed 3 °C .
The oil content of compressed air must remain constant during the life cycle.
Use only the approved oils from AVENTICS. Further information can be found in the “Technical information” document (available in the MediaCentre).

Dimensions

Dimensions in mm

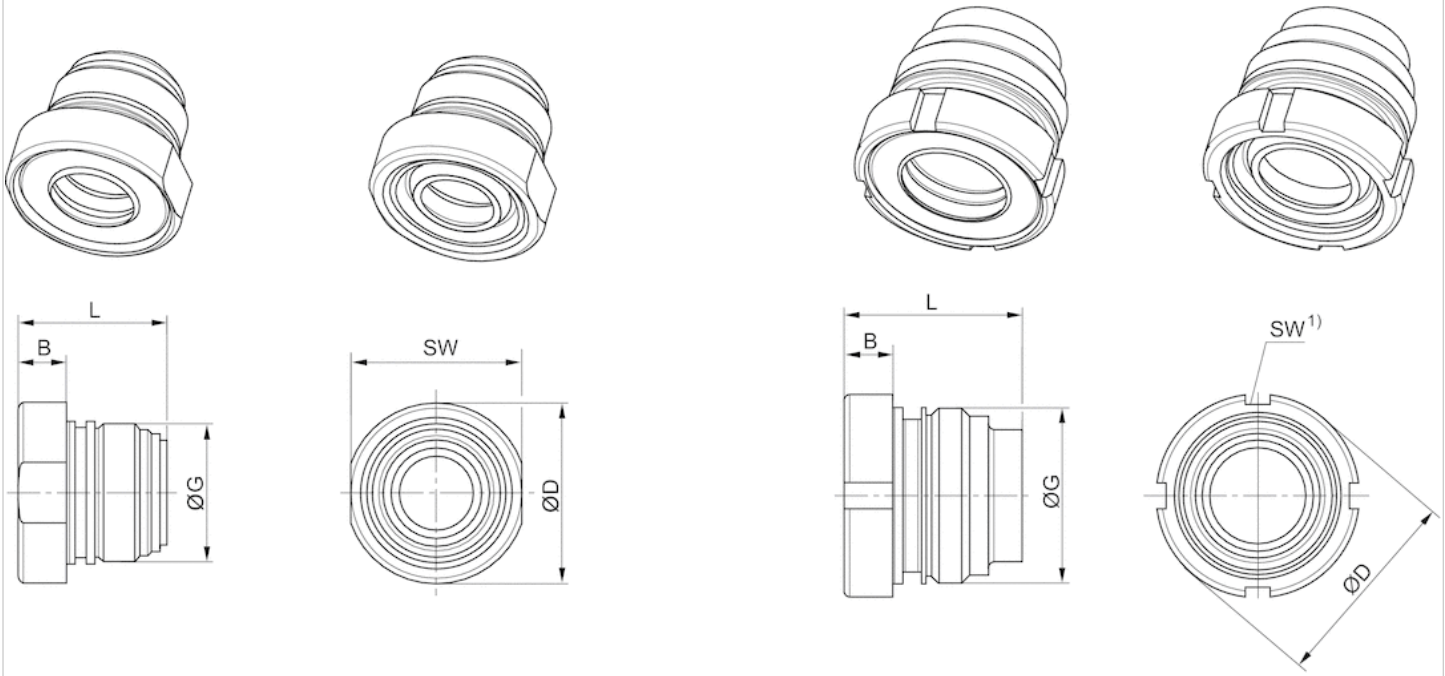

Ø32 - 40

Ø50 - 125

1) Can be mounted with hook wrench in accordance with DIN 1810 A

Dimensions

Piston Ø	32
Seal	Acrylonitrile butadiene rubber
Scraper	Polyester elastomer
Ambient temperature min./max.	-20 °C ... + 80 °C

Acrylonitrile butadiene rubber	Fluorocaoutchouc
Polytetrafluorethylene	Polytetrafluorethylene
-20 °C ... + 80 °C	-10 °C ... + 120 °C

40-125	
Acrylonitrile butadiene rubber	Acrylonitrile butadiene rubber
Polyester elastomer	Polytetrafluorethylene
-20 °C ... + 80 °C	-20 °C ... + 80 °C

Fluorocaoutchouc	Acrylonitrile butadiene rubber	Fluorocaoutchouc
Polytetrafluorethylene	Brass	Brass
-10 °C ... + 120 °C	-20 °C ... + 80 °C	-10 °C ... + 120 °C

Dimensions

Ø	B	ØD	G	L	SW
32	6.7	24.5	M22x1	23	23
40	9.2	34	M26x1,5	28.1	32
50, 63	9	38.5	M33x2	33.5	40-42
80, 100	10	44	M40x2	44	45-50
125	12	57	M50x2	56	58-62

Dimensions

Option to convert from ports on one side (ports on base/ BB) to ports on both sides (ports on cover and base/ AB)

D32 - 100

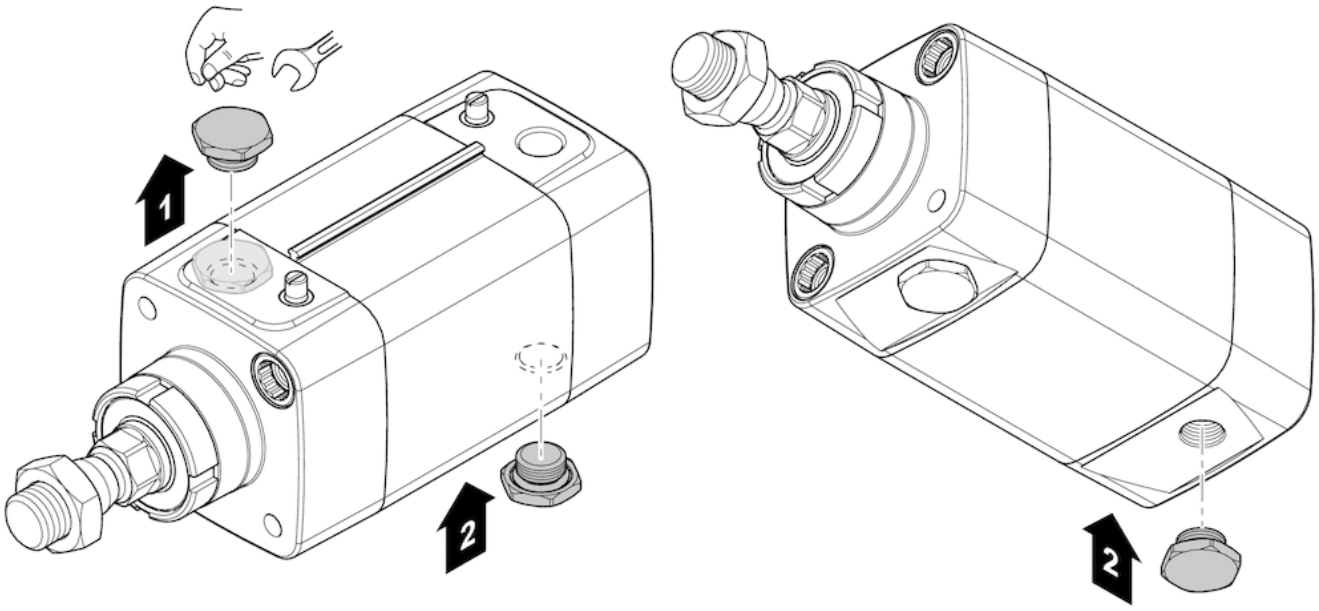

D63

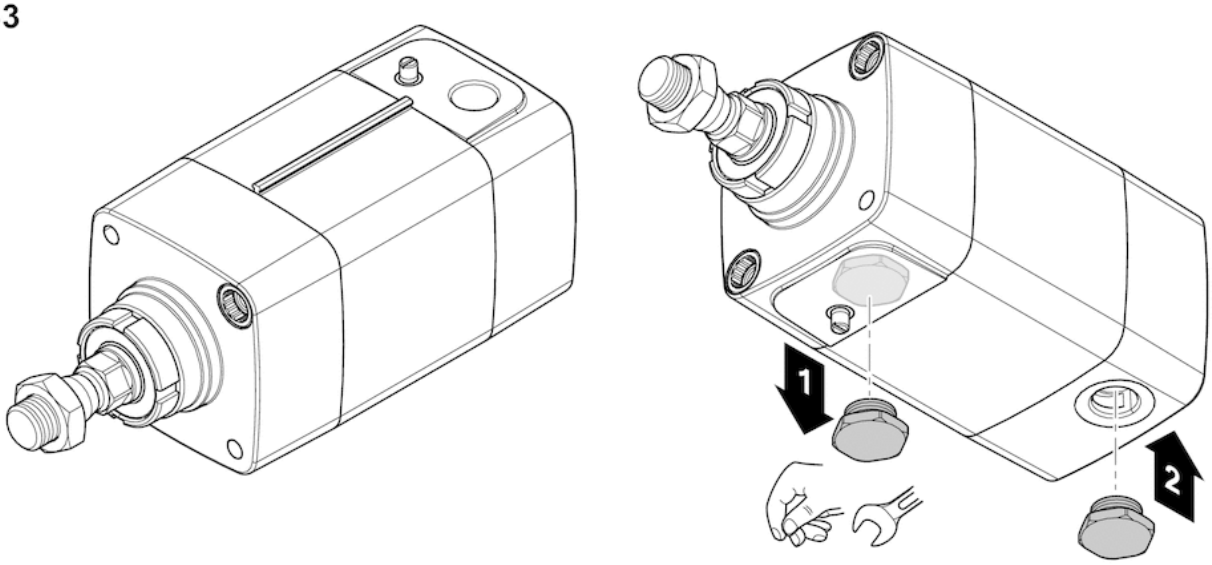

Accessories overview

Overview drawing

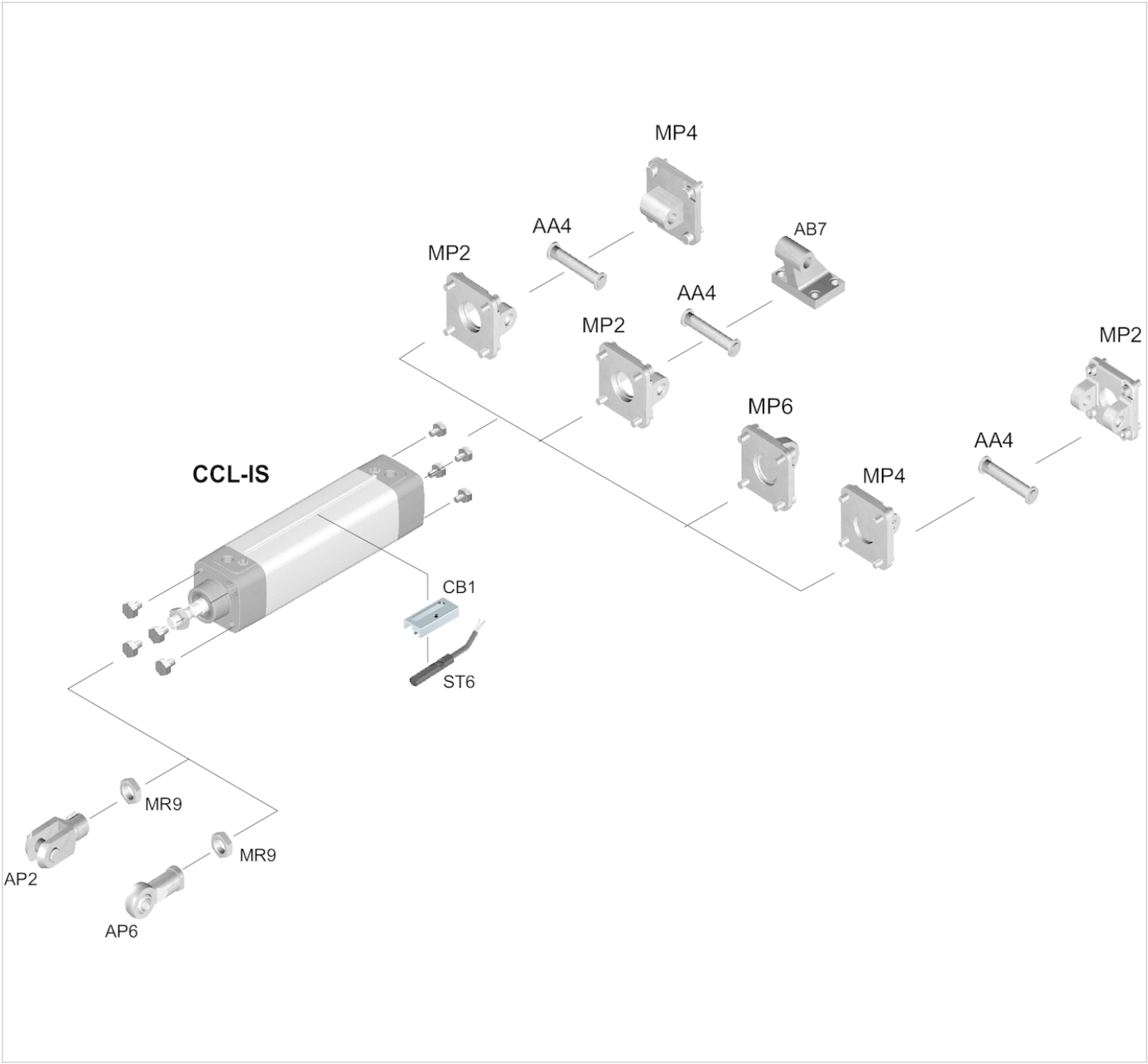

NOTE:
This overview drawing is only for orientation to indicate where the various accessory parts can be fastened to the cylinder. The illustration has been simplified for this purpose. It is thus not possible to derive the dimensions from this overview.

ISO 15552, series CCL-IS

- Dry-run scraper for increased service life in grease-free operation
- ISO 15552
- Ø 32-125 mm
- Ports G 1/8 G 1/4 G 3/8 G 1/2
- double-acting
- with magnetic piston
- Cushioning pneumatically adjustable
- Piston rod External thread
- suitable for use in food processing



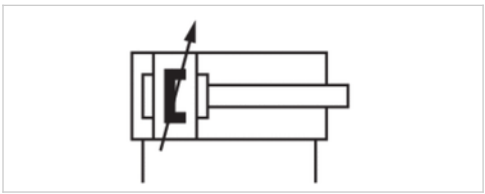

Standards	ISO 15552
Compressed air connection	Internal thread
Working pressure min./max.	1,5 ... 10 bar
Ambient temperature min./max.	-20 ... 80 °C
Medium temperature min./max.	-20 ... 80 °C
Medium	Compressed air
Max. particle size	50 µm
Oil content of compressed air	0 ... 5 mg/m³
Pressure for determining piston forces	6.3 bar

Technical data

Piston Ø Piston rod thread Ports Piston rod Ø	32 mm M10x1,25 G 1/8 12 mm	40 mm M12x1,25 G 1/4 16 mm	50 mm M16x1,5 G 1/4 20 mm	63 mm M16x1,5 G 3/8 20 mm	80 mm M20x1,5 G 3/8 25 mm	100 mm M20x1,5 G 1/2 25 mm
Stroke 25	R481609634	R481609645	R481609656	R481609667	R481609678	R481609689
50	R481609635	R481609646	R481609657	R481609668	R481609679	R481609690
80	R481609636	R481609647	R481609658	R481609669	R481609680	R481609691
100	R481609637	R481609648	R481609659	R481609670	R481609681	R481609692
125	R481609638	R481609649	R481609660	R481609671	R481609682	R481609693
160	R481609639	R481609650	R481609661	R481609672	R481609683	R481609694
200	R481609640	R481609651	R481609662	R481609673	R481609684	R481609695
250	R481609641	R481609652	R481609663	R481609674	R481609685	R481609696
320	R481609642	R481609653	R481609664	R481609675	R481609686	R481609697
400	R481609643	R481609654	R481609665	R481609676	R481609687	R481609698
500	R481609644	R481609655	R481609666	R481609677	R481609688	R481609699

Piston Ø Piston rod thread Ports Piston rod Ø	125 mm M27x2 G 1/2 32 mm
Stroke 25	R481609700
50	R481609701
80	R481609702
100	R481609703
125	R481609704
160	R481609705
200	R481609706
250	R481609707
320	R481609708
400	R481609709
500	R481609710

Technical data

Piston Ø	32 mm	40 mm	50 mm	63 mm	80 mm	100 mm	125 mm
Retracting piston force	435 N	665 N	1039 N	1766 N	2857 N	4639 N	7224 N
Extracting piston force	507 N	792 N	1237 N	1964 N	3167 N	4948 N	7731 N
Cushioning length	16,5 mm	19 mm	17 mm	16,5 mm	19,5 mm	19,5 mm	22 mm
Cushioning energy	4,8 J	9 J	15 J	27 J	54 J	88 J	140 J
Weight 0 mm stroke	0,61 kg	0,92 kg	1,37 kg	1,77 kg	3,23 kg	4,42 kg	6,69 kg
Weight +10 mm stroke	0,036 kg	0,049 kg	0,065 kg	0,076 kg	0,081 kg	0,133 kg	0,127 kg
Stroke max.	1600 mm	1900 mm	2100 mm	2500 mm	2800 mm	2800 mm	2750 mm

Technical information

The pressure dew point must be at least 15 °C under ambient and medium temperature and may not exceed 3 °C .

Further options can be generated in the Internet configurator.

Technical information

Material	
Cylinder tube	Aluminum, anodized
Piston rod	Stainless steel
Front cover	Aluminum, anodized
End cover	Aluminum, anodized
Scraper	Ultra-high-molecular-weight polyethylene (UHMW-PE)
Tie-rods	Stainless steel
Grease	AGF (NSF-H1)

Dimensions

Ø 32 - 63

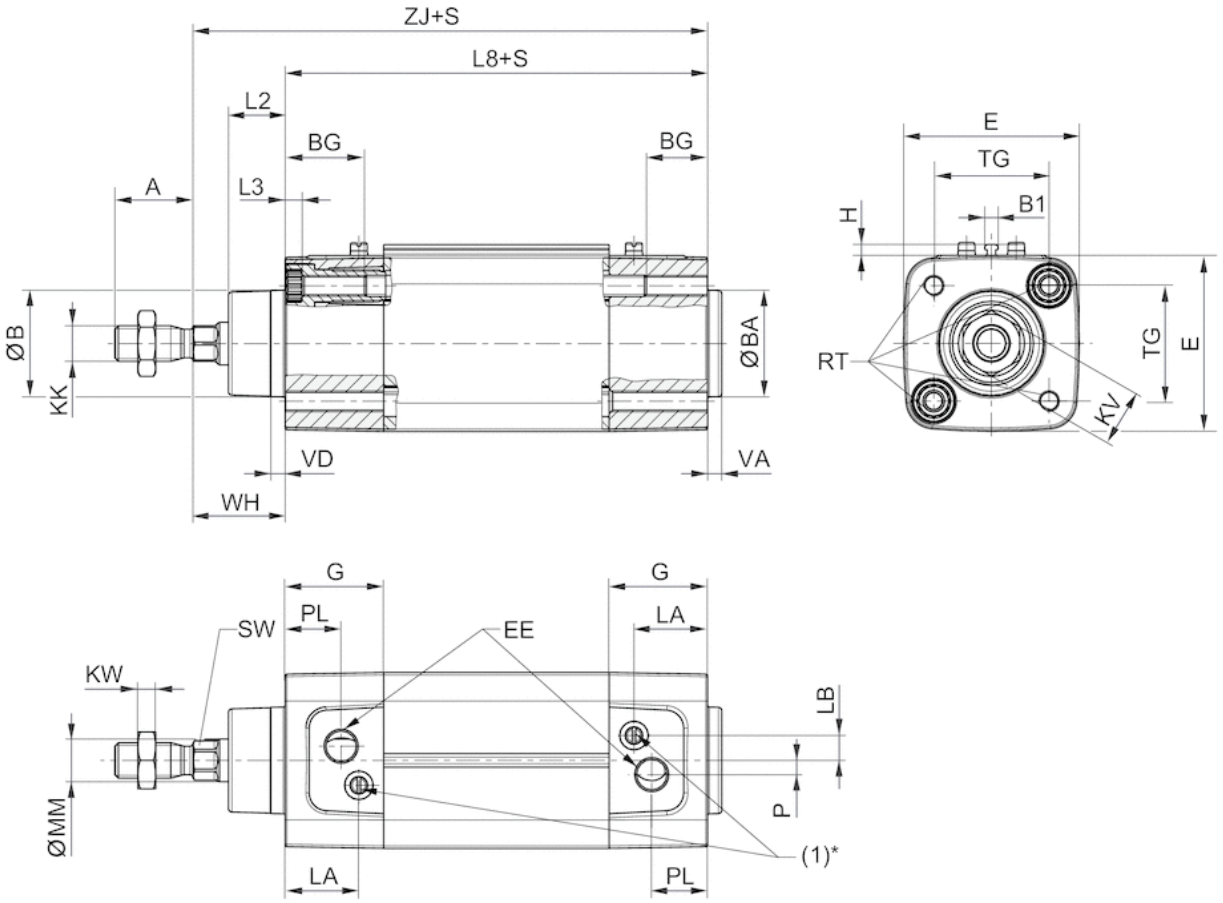

S=stroke

* The flow control screw (1) only has a function in cylinders with adjustable cushioning.

Ø80 - 125

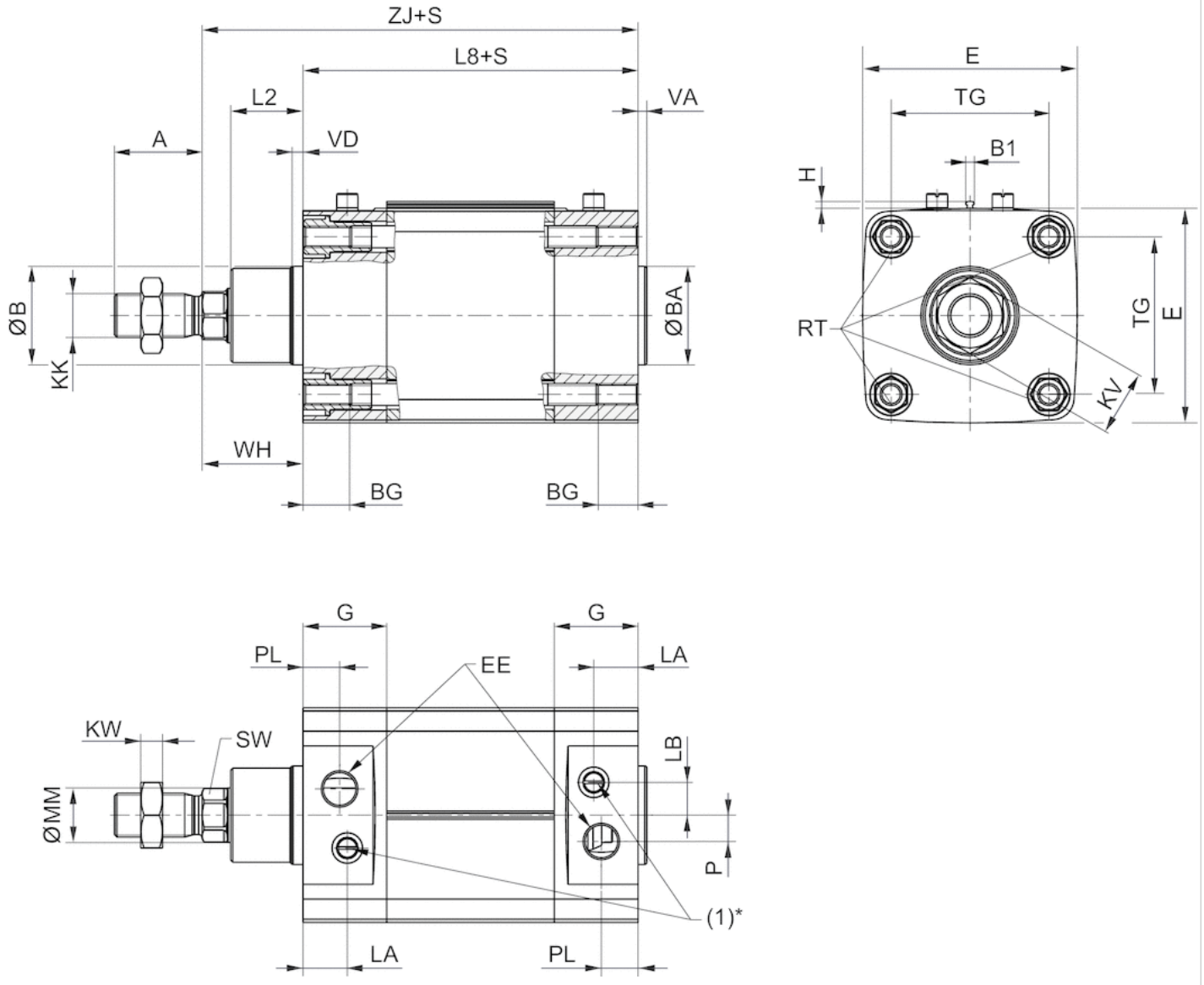

S = stroke
* The flow control screw (1) only has a function in cylinders with adjustable cushioning.

Dimensions

Piston Ø	A	ØB / ØBA d11	B1	BG mm	E	EE	G	H	KK	KV	KW	L2	L3 max.
32 mm	22	30	3.8	16	49.5	G1/8	27.75	3.1	M10x1,25	16	5	16	5
40 mm	24	35	3.8	16	57.5	G1/4	33.25	3.1	M12x1,25	18	6	18.25	5
50 mm	32	40	3.8	16	69.5	G1/4	31	3.1	M16x1,5	24	8	25	5
63 mm	32	45	3.8	16	79.5	G3/8	38,25	3.1	M16x1,5	24	8	25	5
80 mm	40	45	3.8	17	98	G3/8	38,25	3.1	M20x1,5	30	10	33	-
100 mm	40	55	3.8	17	115,5	G1/2	42,25	3.1	M20x1,5	30	10	36	-
125 mm	54	60	3.8	20	145	G1/2	54	3.1	M27x2	41	13,5	45	-

Piston Ø	L8	LA	LB	MM f8	P	PL	RT	SW	TG	VA	VD	WH	ZJ
32 mm	94 ±0,4	20.75	7	12	4	15.75	M6	10	32,5 ±0,5	4	4	26 ±1,4	120
40 mm	105 ±0,7	22.75	8	16	5	16.75	M6	13	38 ±0,5	4	5	30 ±1,4	135
50 mm	106 ±0,7	20	12	20	7,7	16	M8	17	46,5 ±0,6	4	5	37 ±1,4	143
63 mm	121 ±0,8	27,25	11	20	11	19,25	M8	17	56,5 ±0,7	4	5	37 ±1,8	158
80 mm	128 ±0,8	20,25	15	25	12	16,75	M10	22	72 ±0,7	4	5	46 ±1,8	174
100 mm	138 ±1	24,25	14	25	17	19,25	M10	22	89 ±0,7	4	5	51 ±1,8	189
125 mm	160 ±1	25,5	4	32	27,5	20	M12	27	110 ±1,1	6	6	65 ±2,2	225

Diagrams

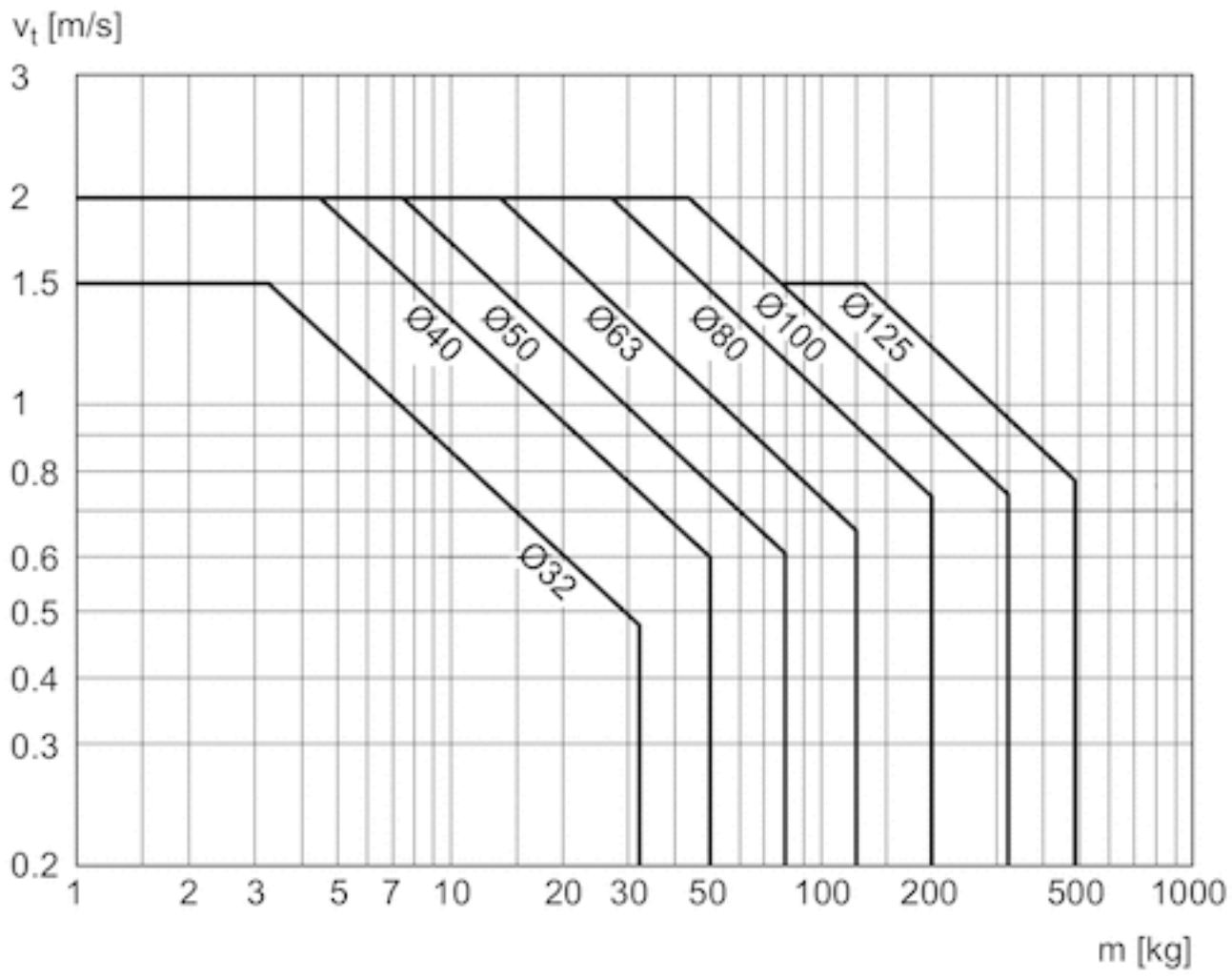

Accessories overview

Overview drawing

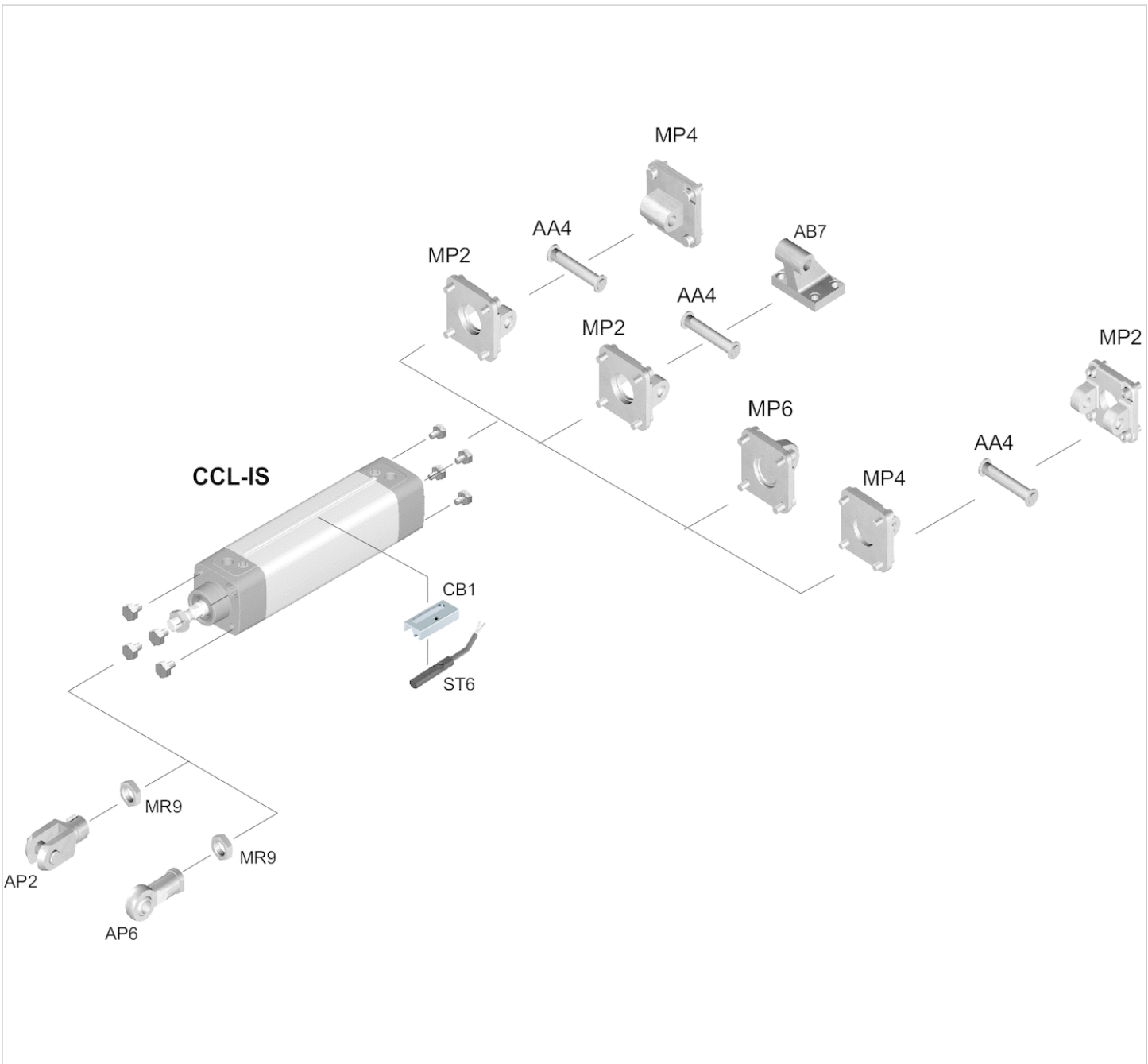

NOTE:
This overview drawing is only for orientation to indicate where the various accessory parts can be fastened to the cylinder. The illustration has been simplified for this purpose. It is thus not possible to derive the dimensions from this overview.

ISO 15552, series CCL-IS

- with front lube unit for constant lubrication of the piston rod
- ISO 15552
- Ø 32-125 mm
- Ports G 1/8 G 1/4 G 3/8 G 1/2
- double-acting
- with magnetic piston
- Cushioning pneumatically adjustable
- Piston rod External thread
- suitable for use in food processing



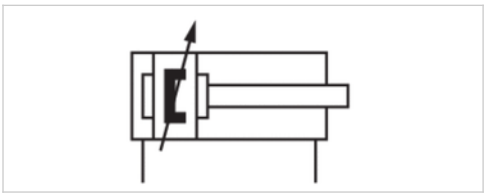

Standards	ISO 15552
Compressed air connection	Internal thread
Working pressure min./max.	1,5 ... 10 bar
Ambient temperature min./max.	-20 ... 80 °C
Medium temperature min./max.	-20 ... 80 °C
Medium	Compressed air
Max. particle size	50 µm
Oil content of compressed air	0 ... 5 mg/m³
Pressure for determining piston forces	6.3 bar

Technical data

Piston Ø Piston rod thread Ports Piston rod Ø	32 mm M10x1,25 G 1/8 12 mm	40 mm M12x1,25 G 1/4 16 mm	50 mm M16x1,5 G 1/4 20 mm	63 mm M16x1,5 G 3/8 20 mm	80 mm M20x1,5 G 3/8 25 mm	100 mm M20x1,5 G 1/2 25 mm
Stroke 25	R481609711	R481609722	R481609733	R481609744	R481609755	R481609766
50	R481609712	R481609723	R481609734	R481609745	R481609756	R481609767
80	R481609713	R481609724	R481609735	R481609746	R481609757	R481609768
100	R481609714	R481609725	R481609736	R481609747	R481609758	R481609769
125	R481609715	R481609726	R481609737	R481609748	R481609759	R481609770
160	R481609716	R481609727	R481609738	R481609749	R481609760	R481609771
200	-	R481609728	R481609739	R481609750	R481609761	R481609772
250	R481609718	R481609729	R481609740	R481609751	R481609762	R481609773
320	R481609719	R481609730	R481609741	R481609752	R481609763	R481609774
400	R481609720	R481609731	R481609742	R481609753	R481609764	R481609775
500	R481609721	R481609732	R481609743	R481609754	R481609765	R481609776

Piston Ø Piston rod thread Ports Piston rod Ø	125 mm M27x2 G 1/2 32 mm
Stroke 25	R481609777
50	R481609778
80	R481609779
100	R481609780
125	R481609781
160	R481609782
200	R481609783
250	R481609784
320	R481609785
400	R481609786
500	R481609787

Technical data

Piston Ø	32 mm	40 mm	50 mm	63 mm	80 mm	100 mm	125 mm
Retracting piston force	435 N	665 N	1039 N	1766 N	2857 N	4639 N	7224 N
Extracting piston force	507 N	792 N	1237 N	1964 N	3167 N	4948 N	7731 N
Cushioning length	16,5 mm	19 mm	17 mm	16,5 mm	19,5 mm	19,5 mm	22 mm
Cushioning energy	4,8 J	9 J	15 J	27 J	54 J	88 J	140 J
Weight 0 mm stroke	0,66 kg	0,99 kg	1,48 kg	1,88 kg	3,41 kg	4,6 kg	7 kg
Weight +10 mm stroke	0,036 kg	0,049 kg	0,065 kg	0,076 kg	0,081 kg	0,133 kg	0,127 kg
Stroke max.	1600 mm	1900 mm	2100 mm	2500 mm	2800 mm	2800 mm	2800 mm

Technical information

The pressure dew point must be at least 15 °C under ambient and medium temperature and may not exceed 3 °C .

Further options can be generated in the Internet configurator.
The following operating instructions can be found in the Media Center: R412019487
To maximize service life of the lube unit, refill the grease manually at recommended intervals.
Normal ambient conditions: 2x/yearWeekly cleaning of cylinder/system: 1x/monthDaily cleaning of cylinder/system: 1x/week

Technical information

Material	
Cylinder tube	Aluminum, anodized
Piston rod	Stainless steel
Front cover	Aluminum, anodized
End cover	Aluminum, anodized
Scraper	Polyester
Tie-rods	Stainless steel
Front lube unit	Aluminum, anodized
Grease	AGF (NSF-H1)

Dimensions

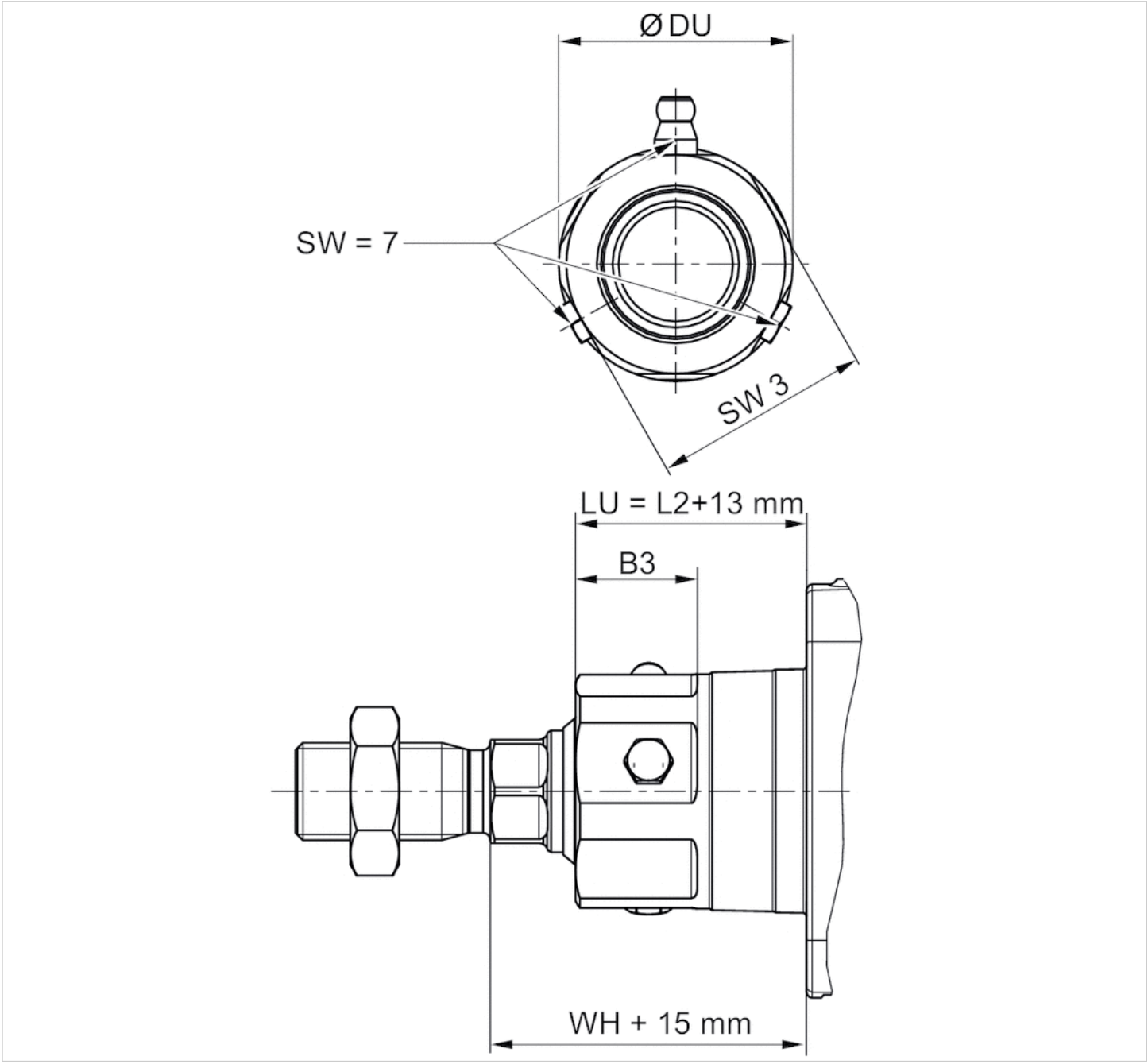

Dimensions

Part No.	Piston Ø	B3	Ø DU	LU	L2	SW3	WH
R481609711	32 mm	6	27.5	29.25	16.25	24	26 ±1.4
R481609722	40 mm	20	34	31.25	18.25	30	30 ±1.4
R481609733	50 mm	20	38.5	38	25	36	37 ±1.4
R481609744	63 mm	20	38.5	38	25	36	37 ±1.8
R481609755	80 mm	21	44	46	33	41	46 ±1.8
R481609766	100 mm	21	44	49	36	41	51 ±1.8
R481609777	125 mm	23	57	58	45	50	65 ± 2.2

Dimensions

Possible lube nipple positions

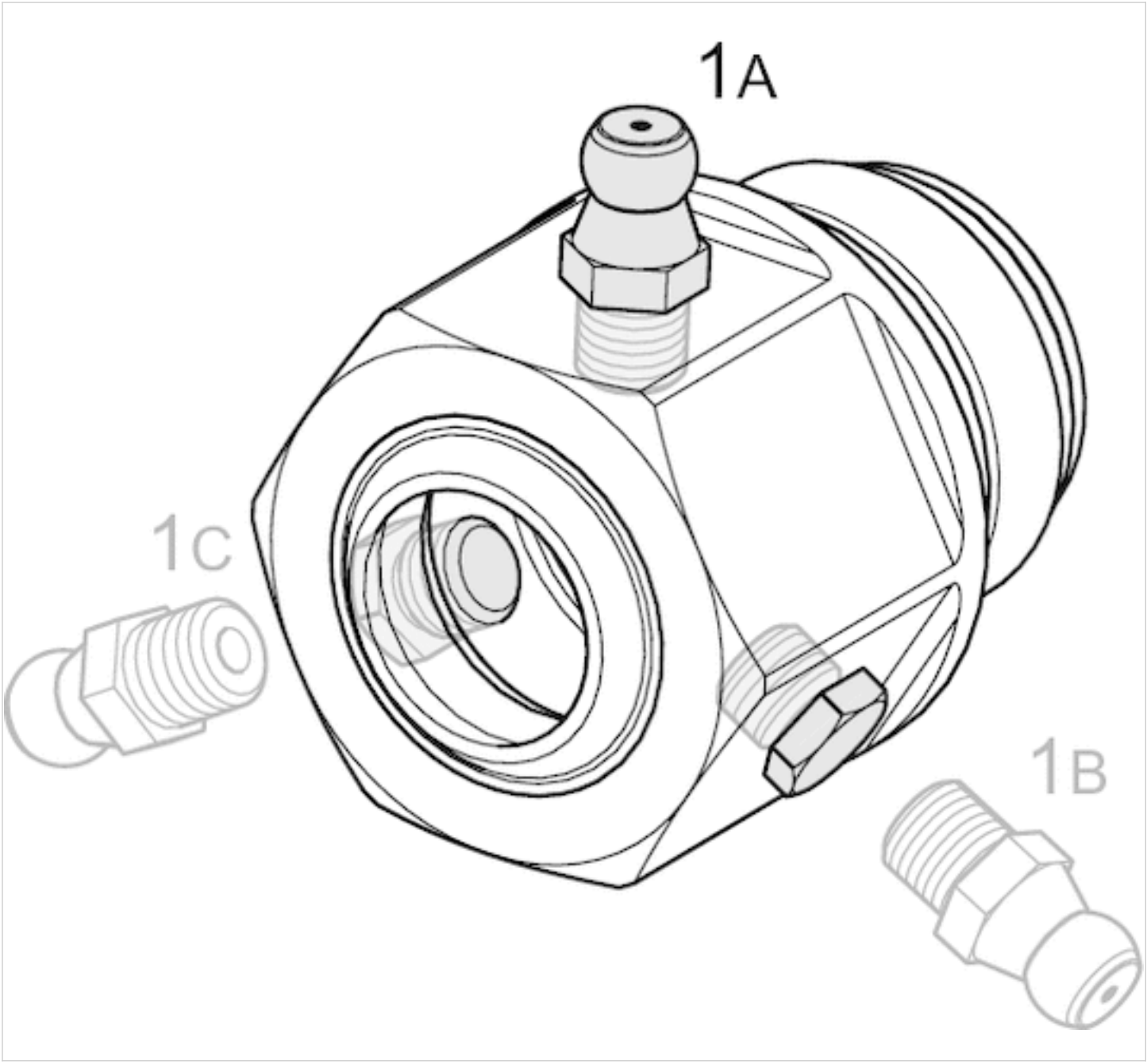

3 positions offset by 120° each.

Accessories overview

Overview drawing

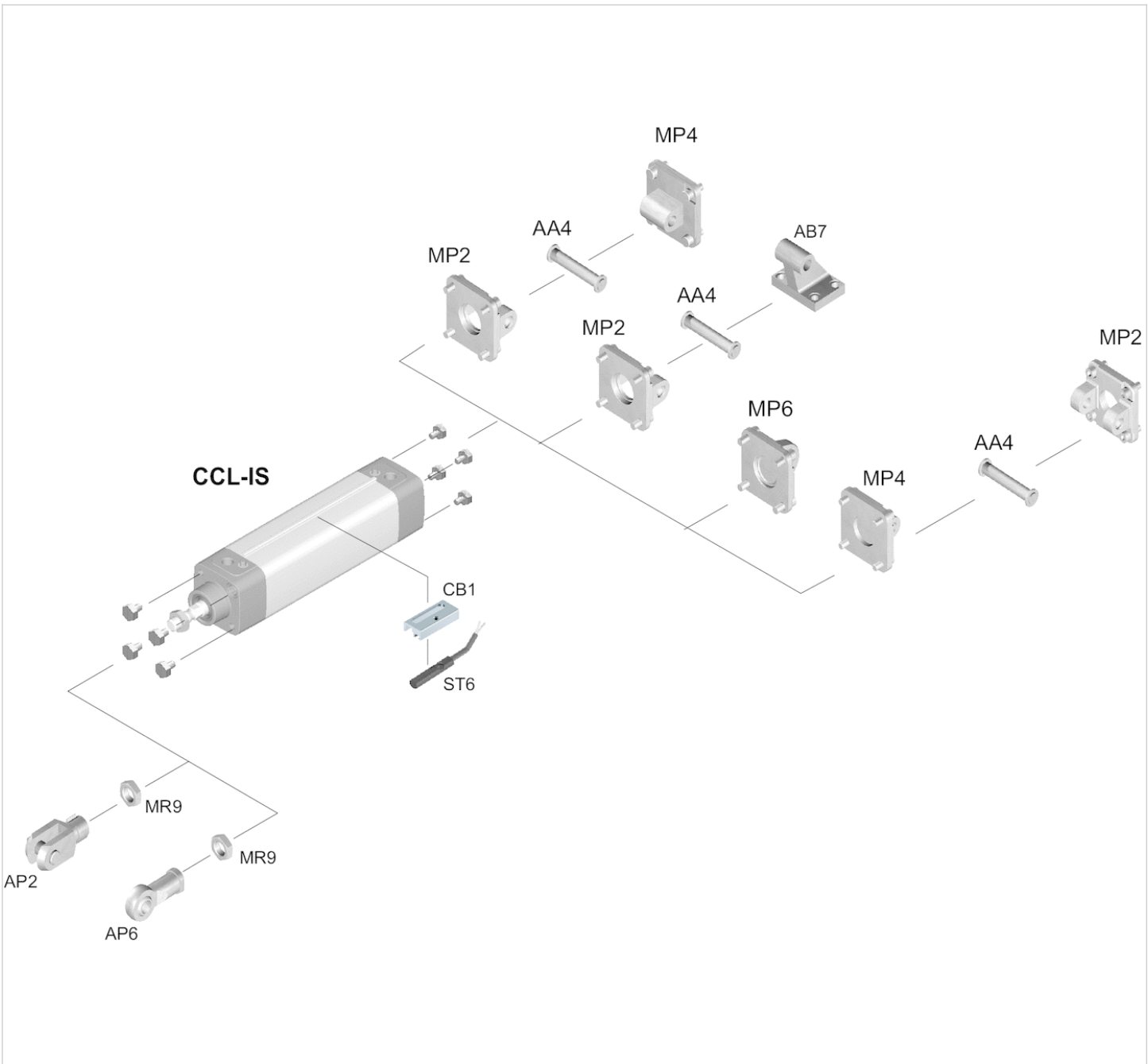

NOTE:
This overview drawing is only for orientation to indicate where the various accessory parts can be fastened to the cylinder. The illustration has been simplified for this purpose. It is thus not possible to derive the dimensions from this overview.

ISO 15552, series CCL-IS

- Especially high corrosion resistance.
- ISO 15552
- Ø 32-125 mm
- Ports G 1/8 G 1/4 G 3/8 G 1/2
- double-acting
- with magnetic piston
- Cushioning pneumatically adjustable
- Piston rod External thread
- suitable for use in food processing



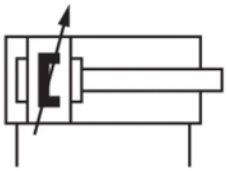

Standards	ISO 15552
Compressed air connection	Internal thread
Working pressure min./max.	1,5 ... 10 bar
Ambient temperature min./max.	-20 ... 80 °C
Medium temperature min./max.	-20 ... 80 °C
Medium	Compressed air
Max. particle size	50 µm
Oil content of compressed air	0 ... 5 mg/m³
Pressure for determining piston forces	6.3 bar

Technical data

Piston Ø Piston rod thread Ports Piston rod Ø	32 mm M10x1,25 G 1/8 12 mm	40 mm M12x1,25 G 1/4 16 mm	50 mm M16x1,5 G 1/4 20 mm	63 mm M16x1,5 G 3/8 20 mm	80 mm M20x1,5 G 3/8 25 mm	100 mm M20x1,5 G 1/2 25 mm
Stroke 25	R481609799	R481609810	R481609821	R481609832	R481609843	R481609854
50	R481609800	R481609811	R481609822	R481609833	R481609844	R481609855
80	R481609801	R481609812	R481609823	R481609834	R481609845	R481609856
100	R481609802	R481609813	R481609824	R481609835	R481609846	R481609857
125	R481609803	R481609814	R481609825	R481609836	R481609847	R481609858
160	R481609804	R481609815	R481609826	R481609837	R481609848	R481609859
200	R481609805	R481609816	R481609827	R481609838	R481609849	R481609860
250	R481609806	R481609817	R481609828	R481609839	R481609850	R481609861
320	R481609807	R481609818	R481609829	R481609840	R481609851	R481609862
400	R481609808	R481609819	R481609830	R481609841	R481609852	R481609863
500	R481609809	R481609820	R481609831	R481609842	R481609853	R481609864

Piston Ø Piston rod thread Ports Piston rod Ø	125 mm M27x2 G 1/2 32 mm
Stroke 25	R481609865
50	R481609866
80	R481609867
100	R481609868
125	R481609869
160	R481609870
200	R481609871
250	R481609872
320	R481609873
400	R481609874
500	R481609875

Technical data

Piston Ø	32 mm	40 mm	50 mm	63 mm	80 mm	100 mm	125 mm
Retracting piston force	435 N	665 N	1039 N	1766 N	2857 N	4639 N	7224 N
Extracting piston force	507 N	792 N	1237 N	1964 N	3167 N	4948 N	7731 N
Cushioning length	16,5 mm	19 mm	17 mm	16,5 mm	19,5 mm	19,5 mm	22 mm
Cushioning energy	4,8 J	9 J	15 J	27 J	54 J	88 J	140 J
Weight 0 mm stroke	0,61 kg	0,92 kg	1,37 kg	1,77 kg	3,23 kg	4,42 kg	6,69 kg
Weight +10 mm stroke	0,036 kg	0,049 kg	0,065 kg	0,076 kg	0,081 kg	0,133 kg	0,127 kg
Stroke max.	1600 mm	1900 mm	2100 mm	2500 mm	2800 mm	2800 mm	2750 mm

Technical information

The pressure dew point must be at least 15 °C under ambient and medium temperature and may not exceed 3 °C .

Further options can be generated in the Internet configurator.

Technical information

Material	
Cylinder tube	Aluminum, anodized
Piston rod	Stainless steel
Front cover	Aluminum, anodized
End cover	Aluminum, anodized
Scraper	Polyester
Tie-rods	Stainless steel
Grease	AGF (NSF-H1)

Dimensions

Ø 32 - 63

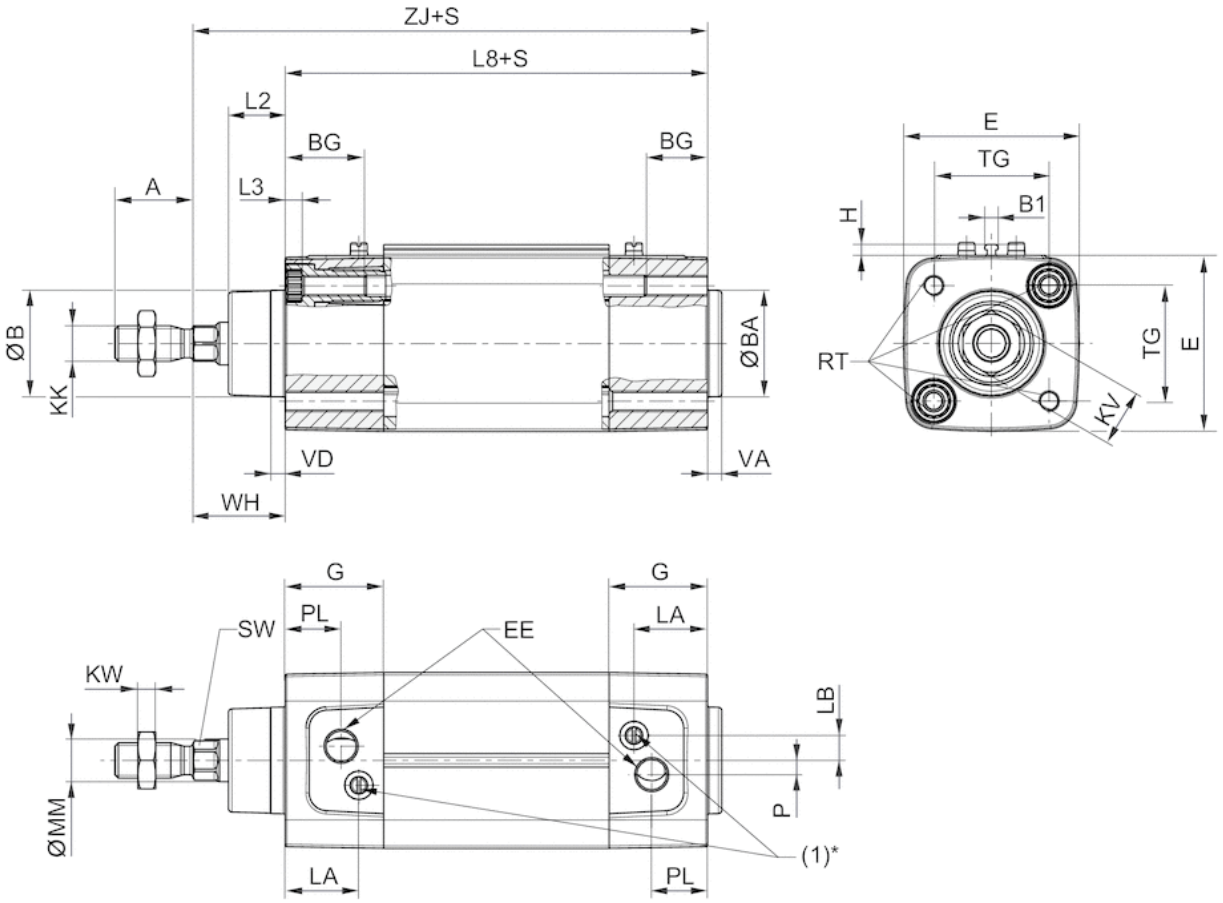

S=stroke

* The flow control screw (1) only has a function in cylinders with adjustable cushioning.

Ø80 - 125

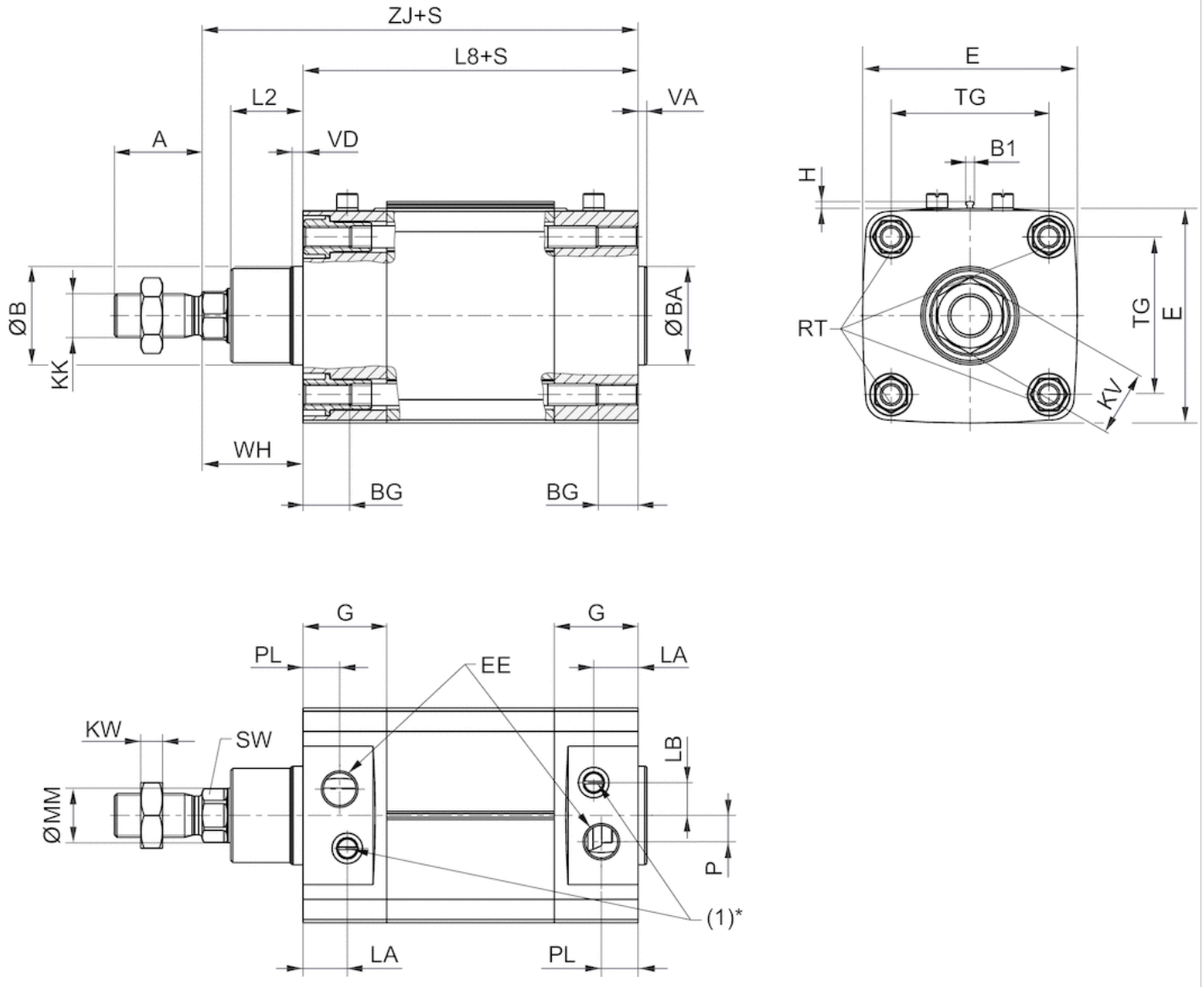

S = stroke

* The flow control screw (1) only has a function in cylinders with adjustable cushioning.

Dimensions

Piston Ø	A	ØB / ØBA d11	B1	BG mm	E	EE	G	H	KK	KV	KW	L2	L3 max.
32 mm	22	30	3.8	16	49.5	G1/8	27.75	3.1	M10x1,25	16	5	16	5
40 mm	24	35	3.8	16	57.5	G1/4	33.25	3.1	M12x1,25	18	6	18.25	5
50 mm	32	40	3.8	16	69.5	G1/4	31	3.1	M16x1,5	24	8	25	5
63 mm	32	45	3.8	16	79.5	G3/8	38,25	3.1	M16x1,5	24	8	25	5
80 mm	40	45	3.8	17	98	G3/8	38,25	3.1	M20x1,5	30	10	33	-
100 mm	40	55	3.8	17	115,5	G1/2	42,25	3.1	M20x1,5	30	10	36	-
125 mm	54	60	3.8	20	145	G1/2	54	3.1	M27x2	41	13,5	45	-

Piston Ø	L8	LA	LB	MM f8	P	PL	RT	SW	TG	VA	VD	WH	ZJ
32 mm	94 ±0,4	20.75	7	12	4	15.75	M6	10	32,5 ±0,5	4	4	26 ±1,4	120
40 mm	105 ±0,7	22.75	8	16	5	16.75	M6	13	38 ±0,5	4	5	30 ±1,4	135
50 mm	106 ±0,7	20	12	20	7,7	16	M8	17	46,5 ±0,6	4	5	37 ±1,4	143
63 mm	121 ±0,8	27,25	11	20	11	19,25	M8	17	56,5 ±0,7	4	5	37 ±1,8	158
80 mm	128 ±0,8	20,25	15	25	12	16,75	M10	22	72 ±0,7	4	5	46 ±1,8	174
100 mm	138 ±1	24,25	14	25	17	19,25	M10	22	89 ±0,7	4	5	51 ±1,8	189
125 mm	160 ±1	25,5	4	32	27,5	20	M12	27	110 ±1,1	6	6	65 ±2,2	225

Diagrams

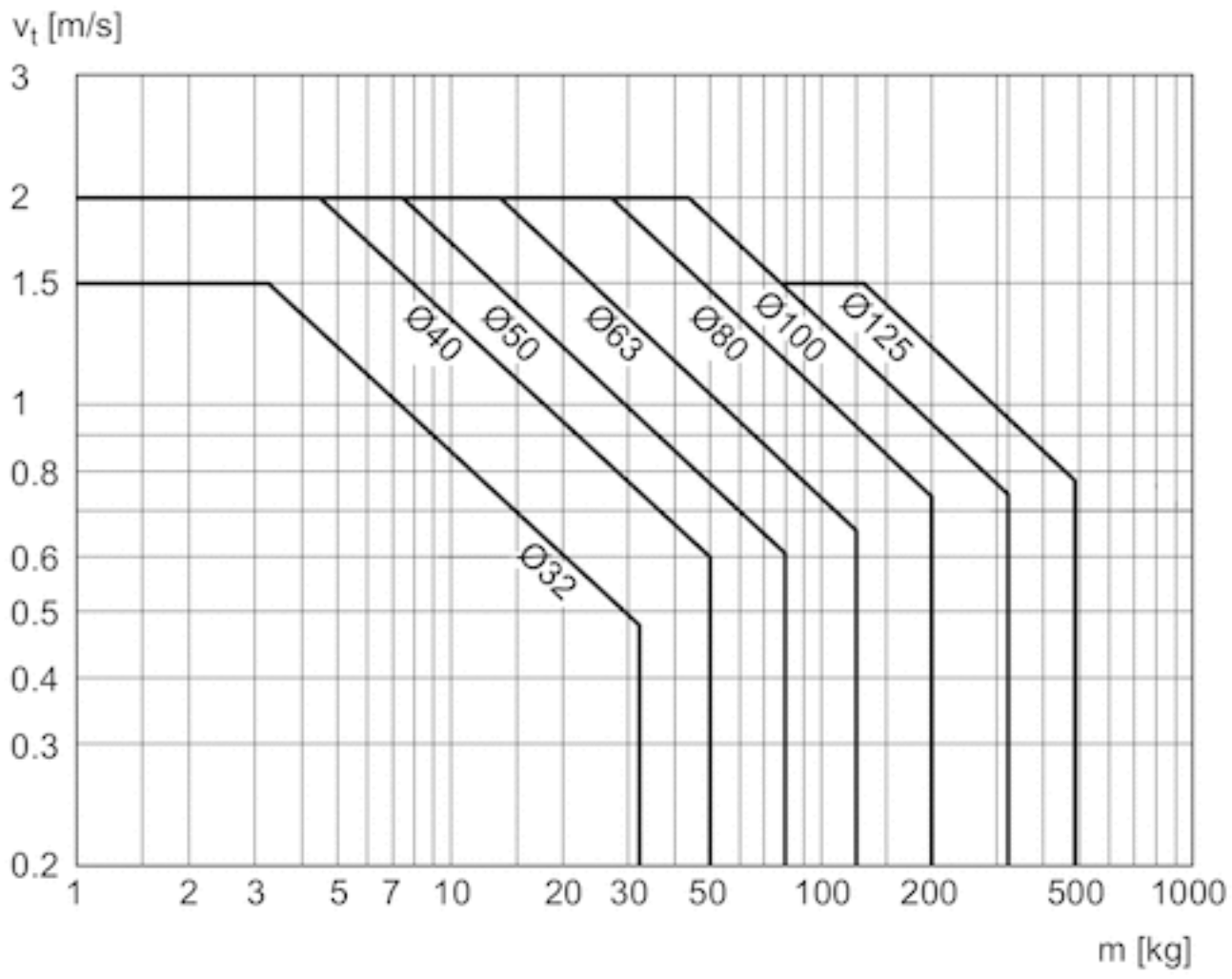

Accessories overview

Overview drawing

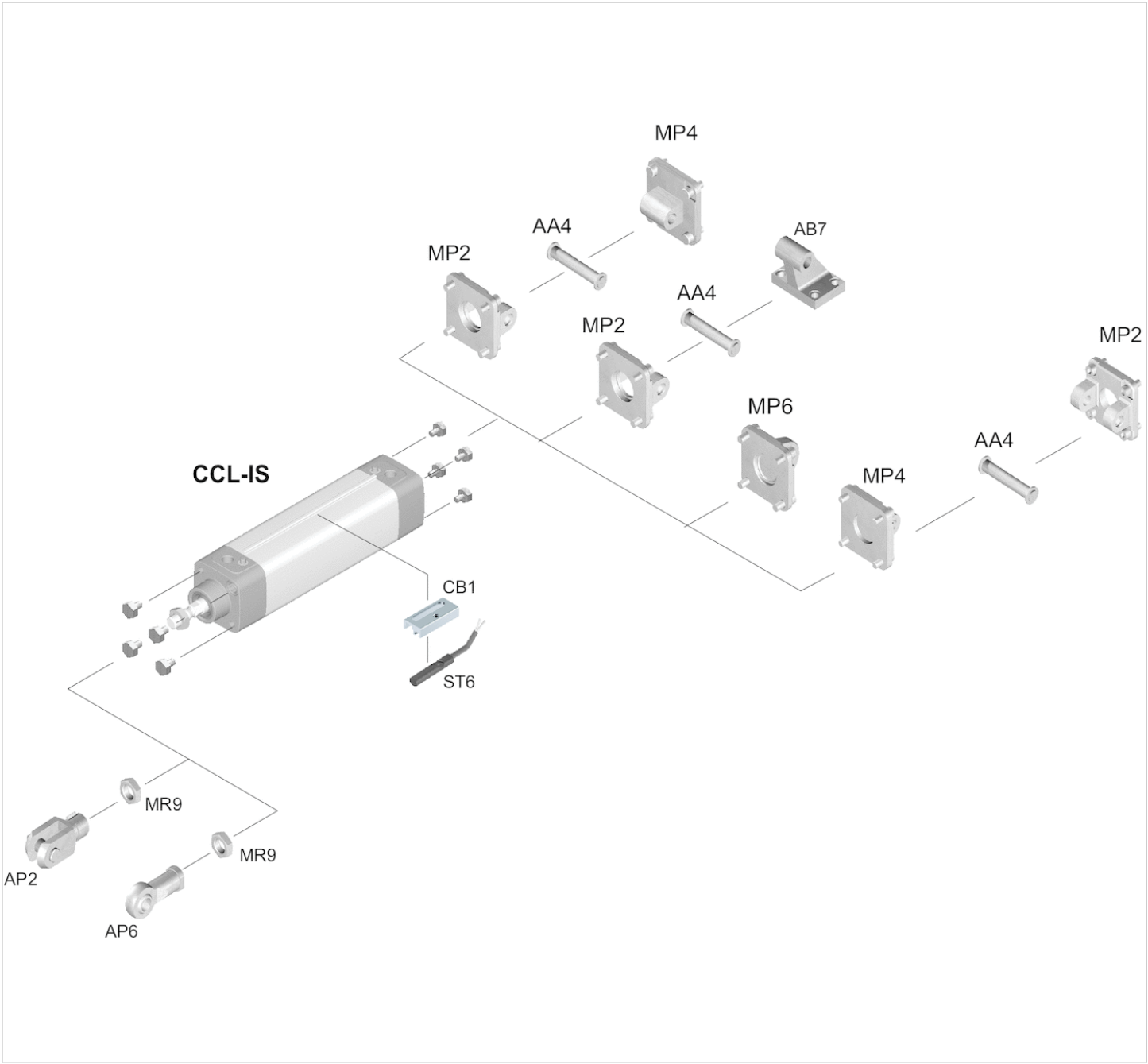

NOTE:
This overview drawing is only for orientation to indicate where the various accessory parts can be fastened to the cylinder. The illustration has been simplified for this purpose. It is thus not possible to derive the dimensions from this overview.

Clevis mounting MP2, Series CM1

- Corrosion-resistant version, Suitable for robust mechanical engineering applications
- Cylinder mounting in accordance with ISO 15552
- Suitable piston Ø 32 40 50 63 80 100 125 mm



Standards	ISO 15552
Weight	See table below

Technical data

Part No.	Piston Ø	Swivel bearing Ø	Weight
3682903590	32 mm	10 mm	0,107 kg
3682904590	40 mm	12 mm	0,157 kg
3682905590	50 mm	12 mm	0,232 kg
3682906590	63 mm	16 mm	0,345 kg
3682908590	80 mm	16 mm	0,574 kg
3682910590	100 mm	20 mm	0,88 kg
R412025571	125 mm	20 mm	1,72 kg

Scope of delivery: clevis mounting incl. pivot pins and mounting screws

Technical information

Material	
Material	Aluminum (forged)
	anodized
Screws	Stainless steel
Bearing	Plastic

Dimensions

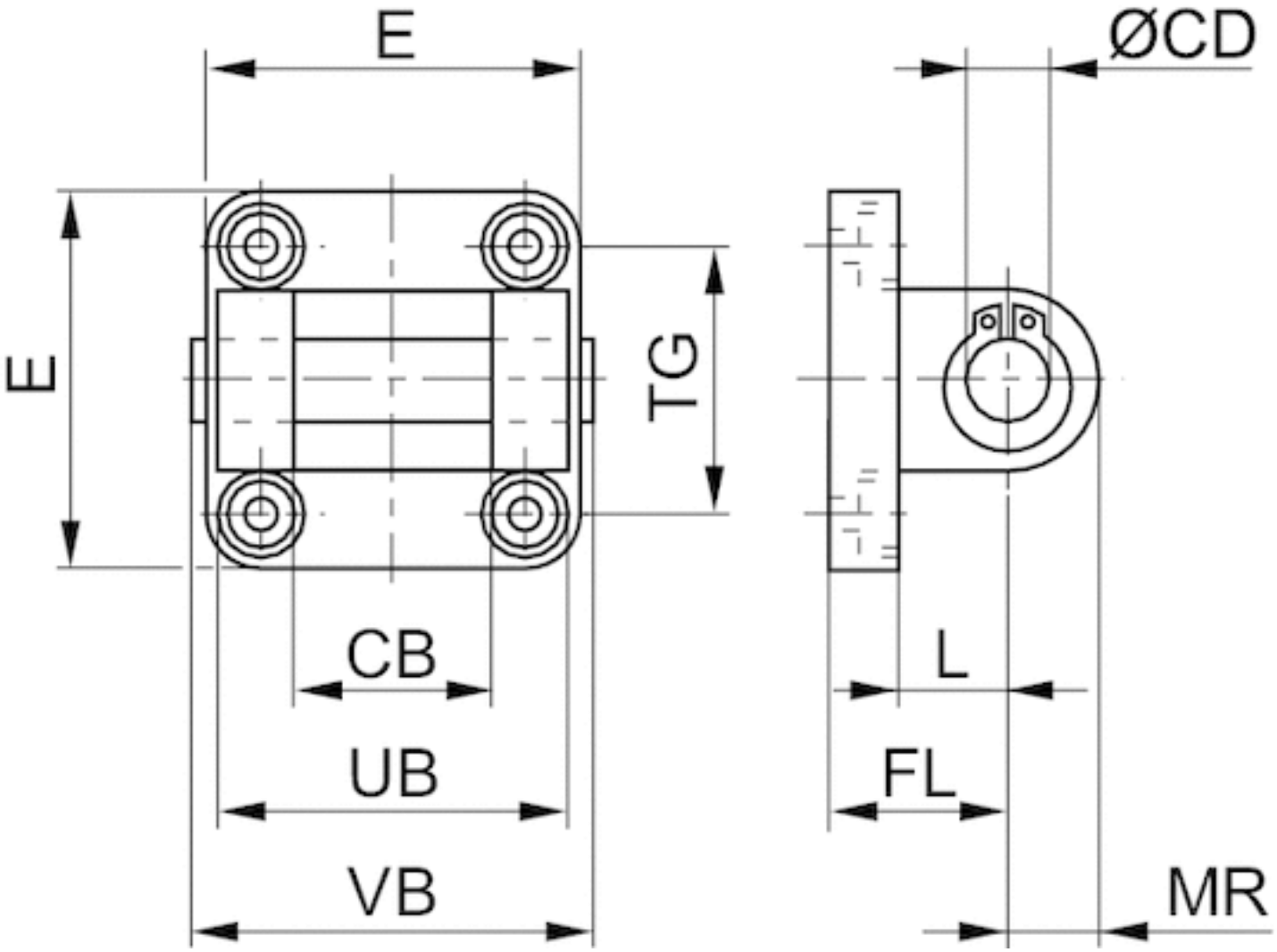

Dimensions

Part No.	CB H14	Ø CD H9	E max.	FL	L min.	MR	UB h14	VB	TG
3682903590	26	10	47	22 ±0,2	12	10	45	50	32,5 ±0,2
3682904590	28	12	54	25 ±0,2	15	12	52	57	38,0 ±0,2
3682905590	32	12	65	27 ±0,2	15	12	60	65	46,5 ±0,2
3682906590	40	16	75	32 ±0,2	20	15	70	76	56,5 ±0,2
3682908590	50	16	94	36 ±0,2	20	17	90	96	72,0 ±0,2
3682910590	60	20	112	41 ±0,2	25	21	110	117	89,0 ±0,2
R412025571	70	25	138	50	30	26	130	140	110,0 ±0,3

Bolts AA4, Series CM1

- Cylinder mounting in accordance with ISO 15552
- Suitable piston Ø 32 40 50 63 80 100 125 mm



Standards	See table below
Weight	See table below

Technical data

Part No.	Piston Ø	Standardization	Weight	Fig.
1823120020	32 mm	-	0,03 kg	Fig. 1
1823120021	40 mm	-	0,05 kg	Fig. 1
1823120022	50 mm	-	0,06 kg	Fig. 1
1823120023	63 mm	-	0,12 kg	Fig. 1
1823120024	80 mm	-	0,15 kg	Fig. 1
1823120025	100 mm	-	0,29 kg	Fig. 1
5236000092	125 mm	ISO 15552	0,53 kg	Fig. 2

Scope of delivery: pivot pins incl. circlips

Technical information

Material	
Material	Steel
	galvanized

Dimensions

Fig. 1

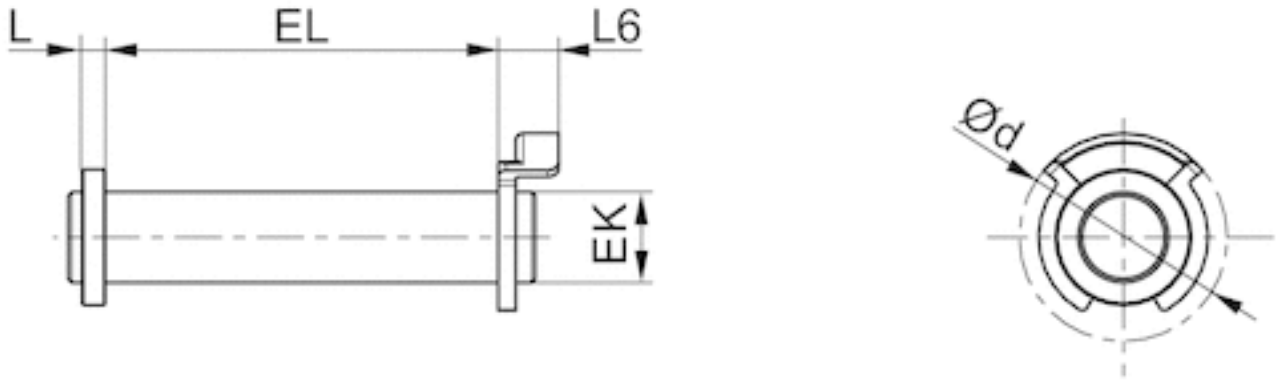

Fig. 2

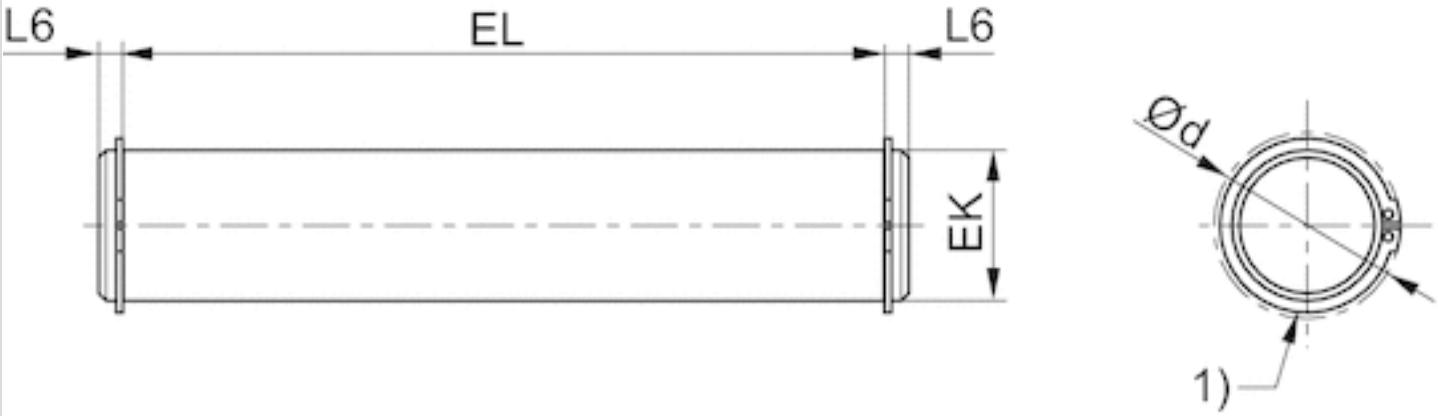

1) circlip DIN 471

Dimensions

Part No.	Piston Ø	Fig.	Ø d max.	EK e8	EL	L max.	L6 max.
1823120020	32 mm	Fig. 1	20	10	45.2 +0,3	3.5	9
1823120021	40 mm	Fig. 1	22	12	52.2 +0,3	4	9
1823120022	50 mm	Fig. 1	22	12	60.2 +0,3	4	9
1823120023	63 mm	Fig. 1	28	16	70.2 +0,3	4.5	11
1823120024	80 mm	Fig. 1	28	16	90.2 +0,3	4.5	11
1823120025	100 mm	Fig. 1	38	20	110.2 +0,3	5	11

Part No.	Piston Ø	Fig.	Ø d max.	EK e8	EL	L max.	L6 max.
5236000092	125 mm	Fig. 2	34.2	25	132 +0,5	-	3.75

Rear eye, Series MP4-HD

- Corrosion-resistant version, suitable for robust mechanical engineering applications, for clevis mounting MP2 and AB3
- Cylinder mounting in accordance with ISO 15552
- Suitable piston Ø 32 40 50 63 80 100 125 mm



Standards ISO 15552

Technical data

Part No.	Piston Ø	Swivel bearing Ø
R412027813	32 mm	10 mm
R412027814	40 mm	12 mm
R412027815	50 mm	12 mm
R412027816	63 mm	16 mm
R412027817	80 mm	16 mm
R412027818	100 mm	20 mm
R412027819	125 mm	25 mm

Scope of delivery: clevis incl. mounting screws

Technical information

Material	
Material	Aluminum (forged)
	anodized
Screws	Stainless steel

Dimensions

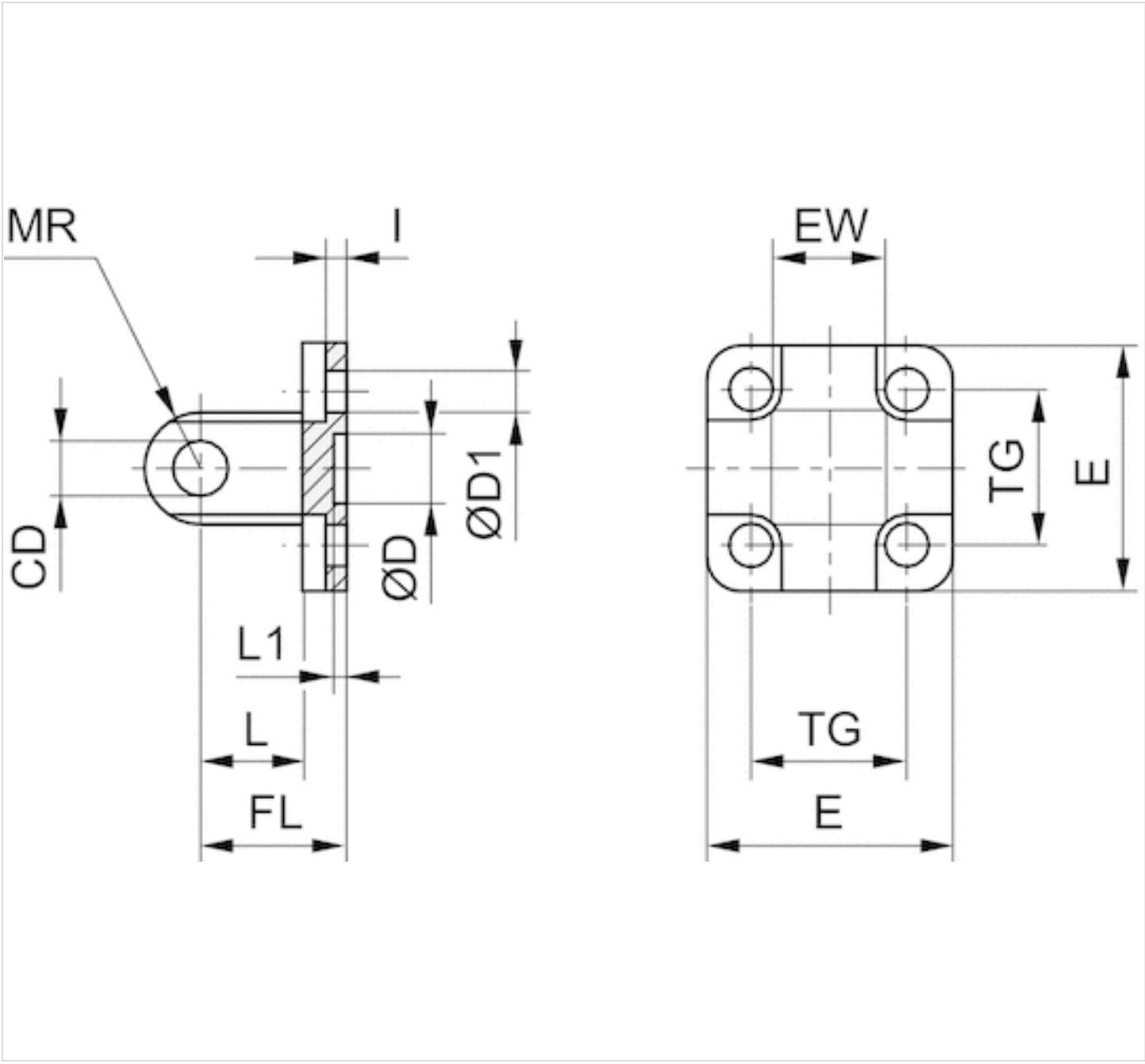

Dimensions

Part No.	Piston Ø	CD H9	Ø D	Ø D1	E	EW	FL ±0.2	I ±0.5	L min.	L1 min.
R412027813	32 mm	10	30 H11	6.6	47.5	26 –0.2/–0.6	22	5.5	12	4.5
R412027814	40 mm	12	35 H11	6.6	53.5	28 –0.2/–0.6	25	5.5	15	4.5
R412027815	50 mm	12	40 H11	9	64	32 –0.2/–0.6	27	6.5	15	4.5
R412027816	63 mm	16	45 H11	9	74	40 –0.2/–0.6	32	6.5	20	4.5
R412027817	80 mm	16	45 H11	11	94	50 –0.2/–0.6	36	10	20	4.5
R412027818	100 mm	20	55 H11	11	113.5	60 –0.2/–0.6	41	10	25	4.5
R412027819	125 mm	25	60 H11	14	138	70 –0.2/–0.6	50	10	30	7

MR max.	TG
10	32.5 ±0.2
12	38 ±0.2
12	46.5 ±0.2
16	56.5 ±0.2
16	72 ±0.2
20	89 ±0.2
26	110 ±0.3

Bearing block AB7-HD, Series CM1

- Corrosion-resistant version, suitable for robust mechanical engineering applications, with fixed bearing
- Cylinder mounting in accordance with ISO 15552
- Suitable piston Ø 32 1016 50 63 80 100 125 mm



Standards	ISO 15552

Technical data

Part No.	Piston Ø	Swivel bearing Ø
R412027820	32 mm	10 mm
R412027821	1016 mm	12 mm
R412027822	50 mm	12 mm
R412027823	63 mm	16 mm
R412027824	80 mm	16 mm
R412027825	100 mm	20 mm
R412027826	125 mm	635 mm

Technical information

Material	
Material	Stainless steel
Screws	Stainless steel

Dimensions

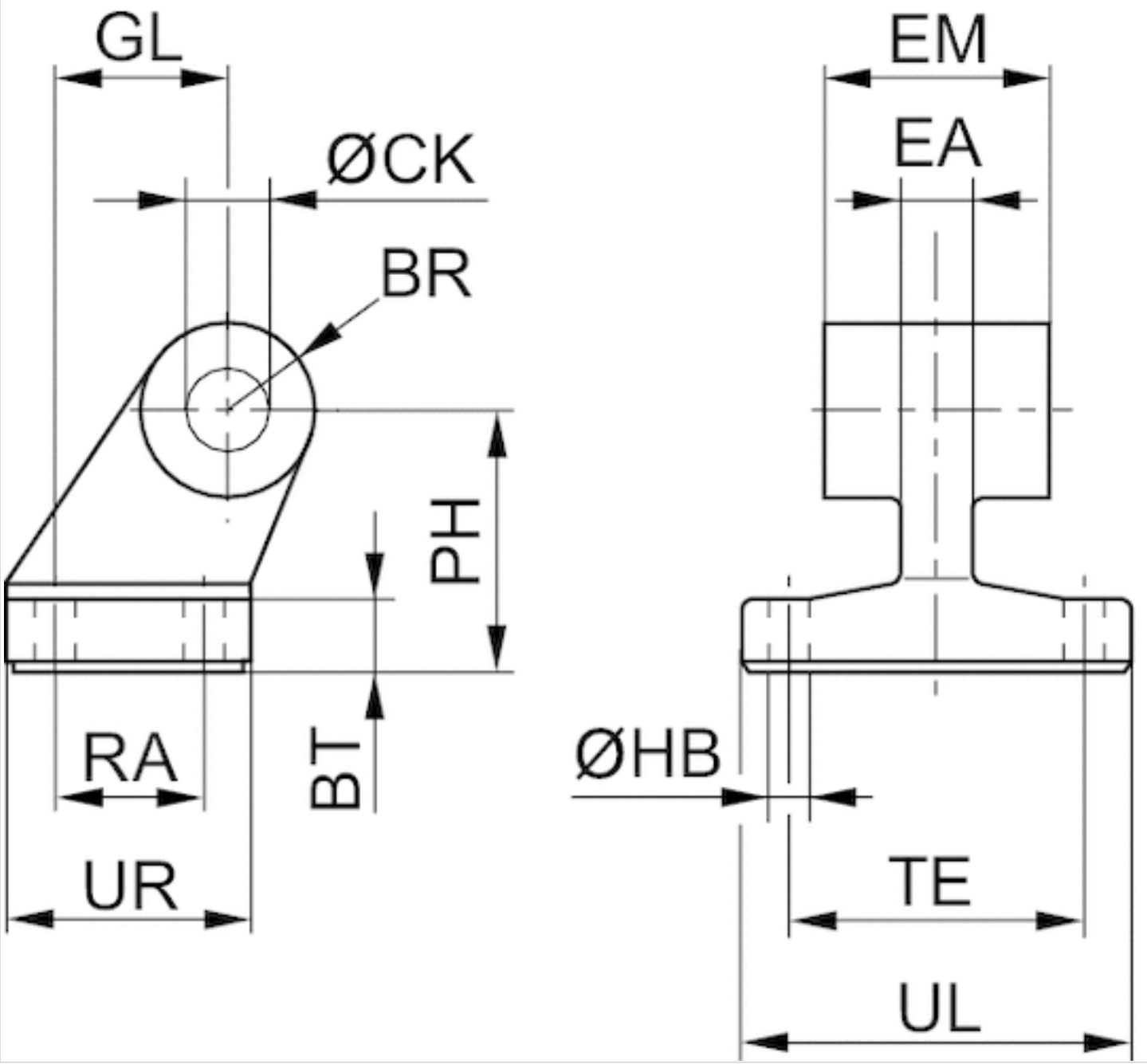

Dimensions

Part No.	Piston Ø	BR	BT	Ø CK	Ø HB	EM	GL	EA	PH	RA	TE	UL	UR
R412027820	32 mm	10	8	10	6,6	26	21	10	32	18	38	51	31
R412027821	1016 mm	11	10	12	6,6	28	24	12	36	22	41	54	35
R412027822	50 mm	13	12	12	9	32	33	16	45	30	50	65	45
R412027823	63 mm	15	12	16	9	40	37	16	50	35	52	67	50
R412027824	80 mm	15	14	16	11	50	47	20	63	40	66	86	60
R412027825	100 mm	19	15	20	11	60	55	20	71	50	76	96	70
R412027826	125 mm	22,5	20	25	14	70	70	30	90	60	94	124	90

Rear eye MP6, Series CM1

- With ball joint and foot
- Cylinder mounting in accordance with ISO 21287 ISO 15552
- Suitable piston Ø 25 32 40 50 63 80 100 125 mm



Standards	See table below
Weight	See table below

Technical data

Part No.	Piston Ø	Swivel bearing Ø	Standardization	Housing material
3663602000	25 mm	10 mm	ISO 21287	Aluminum, anodized
2798060320	32 mm	10 mm	ISO 15552	Aluminum (forged and anodized)
2798060400	40 mm	12 mm	ISO 15552	Aluminum (forged and anodized)
R412025637	50 mm	16 mm	ISO 15552	Aluminum (forged and anodized)
2798060630	63 mm	16 mm	ISO 15552	Aluminum (forged and anodized)
R412025638	80 mm	20 mm	ISO 15552	Aluminum (forged and anodized)
2798061000	100 mm	20 mm	ISO 15552	Aluminum (forged and anodized)
R412025572	125 mm	30 mm	ISO 15552	Aluminum (forged and anodized)

Part No.	Bearing material, inner ring	Bearing material, outer ring	Weight
3663602000	Stainless steel	Stainless steel with PTFE coating	0,1 kg
2798060320	Stainless steel	Stainless steel with PTFE coating	0,1 kg
2798060400	Stainless steel	Stainless steel with PTFE coating	0,1 kg
R412025637	Stainless steel	Stainless steel with PTFE coating	0,2 kg
2798060630	Stainless steel	Stainless steel with PTFE coating	0,4 kg
R412025638	Stainless steel	Stainless steel with PTFE coating	0,5 kg
2798061000	Stainless steel	Stainless steel with PTFE coating	0,9 kg
R412025572	Stainless steel	Stainless steel with PTFE coating	1,46 kg

Scope of delivery: clevis incl. mounting screws

Technical information

Material	
Material	Aluminum, anodized Aluminum (forged and anodized)
Screws	Stainless steel

Material	
Bearing	Stainless steel

Dimensions

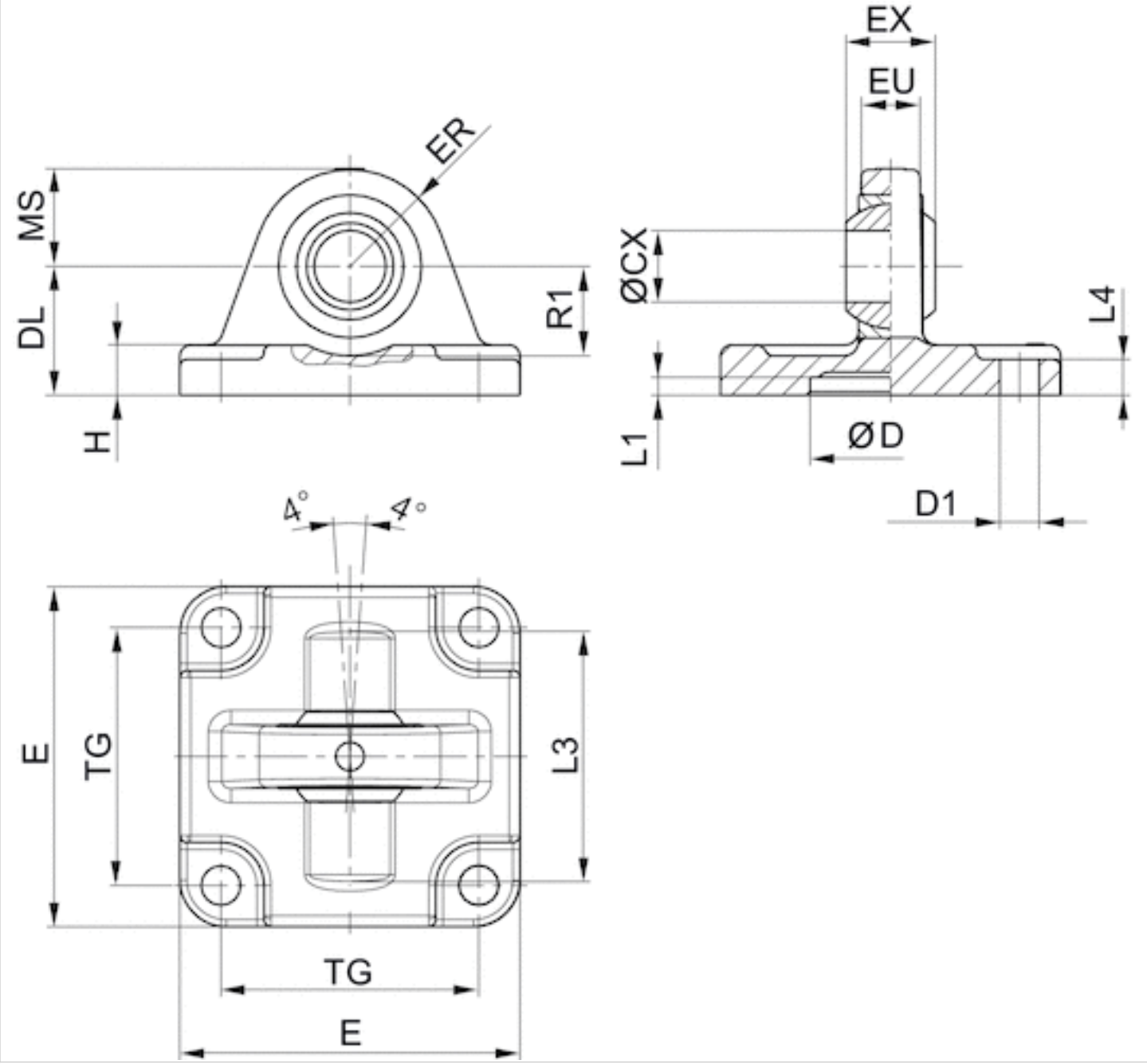

Dimensions

Part No.	Piston Ø	ØCX H7	ØD H11	ØD1 H13	DL ±0,2	E	EX –0,1	ER	EU	H	L1 min.	L3
3663602000	25 mm	10	18	5,5	20	40	9	14	8	6	3	–
2798060320	32 mm	10	30	6,6	22	46	14	17	12,5	6.5	4.5	–
2798060400	40 mm	12	35	6,6	25	52	16	20	12	8	4.5	–
R412025637	50 mm	16	40	9	27	64	21	22	14	9	4.5	48

Part No.	Piston Ø	ØCX H7	ØD H11	ØD1 H13	DL ±0,2	E	EX –0,1	ER	EU	H	L1 min.	L3
2798060630	63 mm	16	45	9	32	74	21	25	15	11	4,5	–
R412025638	80 mm	20	45	11	36	94	25	30	17	12	4.5	70
2798061000	100 mm	20	55	11	41	114	25	32	20	15	4,5	–
R412025572	125 mm	30	60	13,5	50	138	37	-	25	-	7	-

L4	MS -0,5	R1 min.	TG
3	14	–	26
5,5	15,5	16,5	32,5
5,5	18	19,5	38
6,5	21	19	46,5
6,5	23	25,5	56,5
10	28	24	72
10	30	31	89
10	40	32	110 ±0,3

Clevis mounting AB3, Series CM1

- Suitable piston Ø 20, 25 32 mm



The delivered product may vary from that in the illustration.

Technical data

Part No.	Piston Ø	Swivel bearing Ø	Fig.
3323420000	20, 25 mm	8 mm	Fig. 2
3323432000	32 mm	10 mm	Fig. 1

Scope of delivery: clevis mounting incl. pivot pins

Technical information

Material	
Material	Stainless steel

Dimensions

Fig. 1

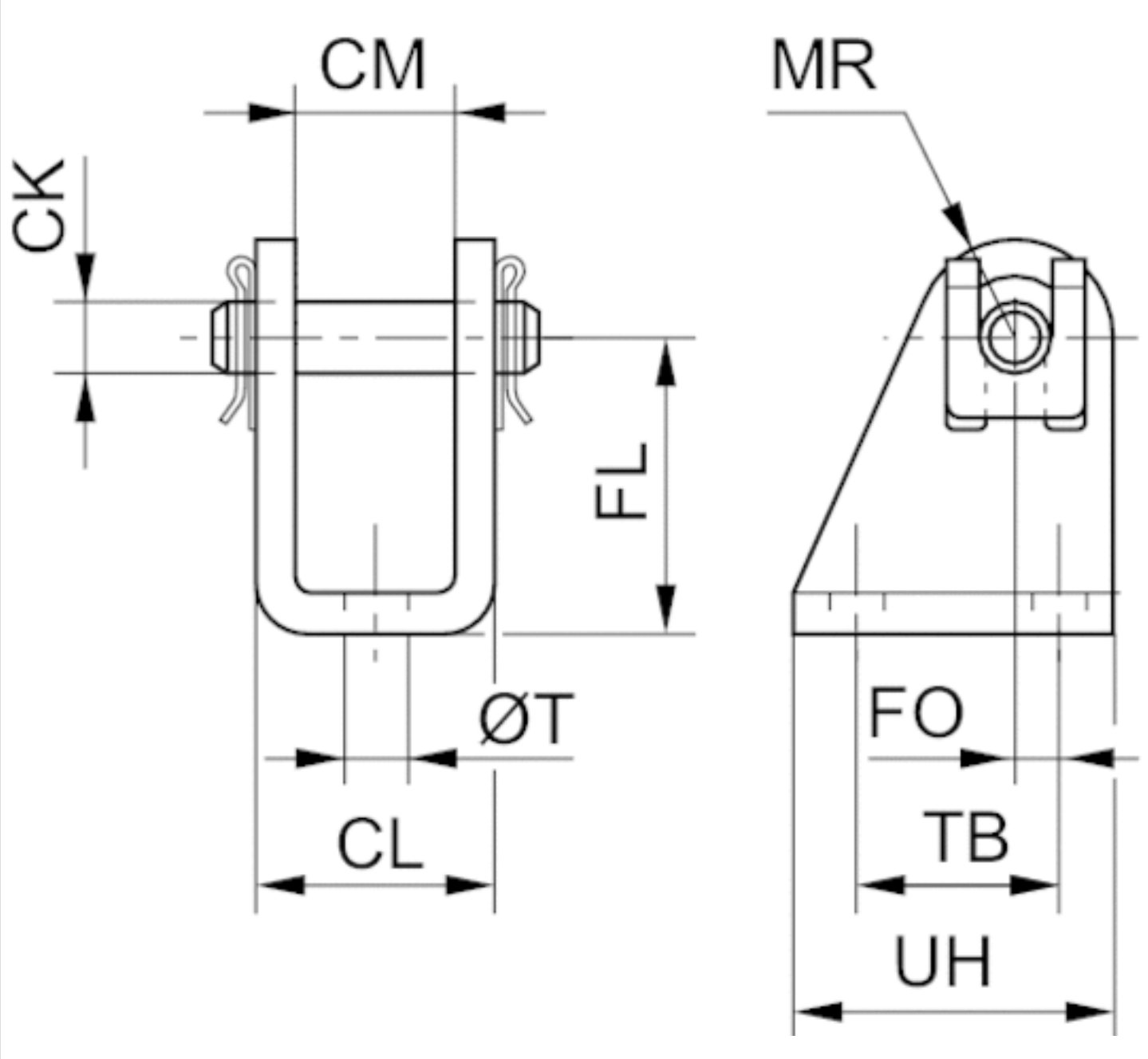

Fig. 2

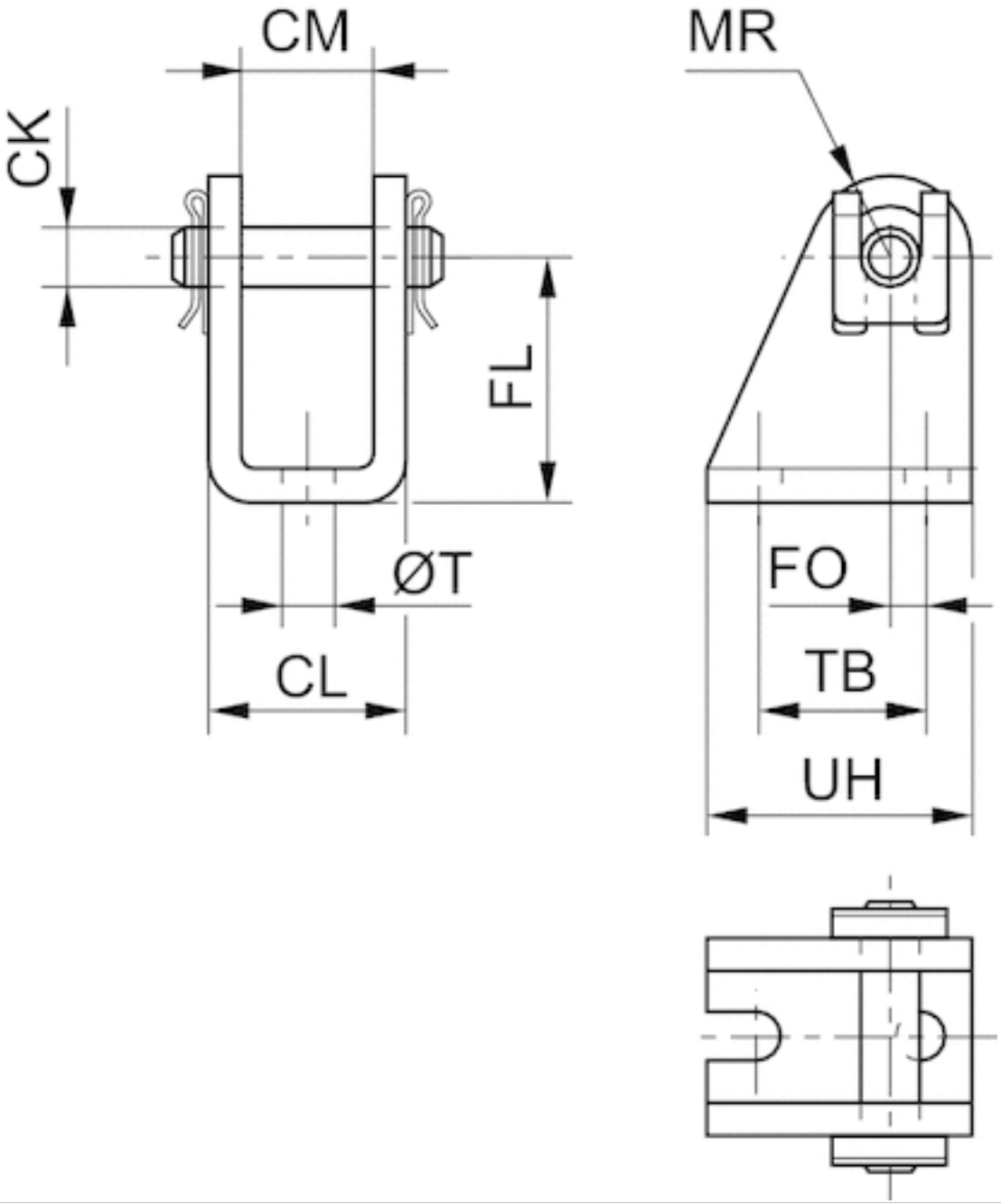

Dimensions

Part No.	Piston Ø	Fig.	CM	Ø CK	CL	FL	FO	MR	Ø T	TB	UH
3323420000	20, 25 mm	Fig. 2	16	8	24	30	4,0	10	6.6	22	34
3323432000	32 mm	Fig. 1	26	10	36	32	6,0	12	6.6	24	36

Blanking screw

- M4 M5 M6 M8 M10 M12



Technical data

Part No.	Port G	Delivery unit	Fig.
R412024762	M4	4 piece	Fig. 1
R412024763	M5	4 piece	Fig. 1
R402003749	M6	4 piece	Fig. 1
R402003750	M8	4 piece	Fig. 1
R402003751	M10	4 piece	Fig. 2
R402003752	M12	4 piece	Fig. 2

Technical information

Material	
Material	Stainless steel

Dimensions

Fig. 1

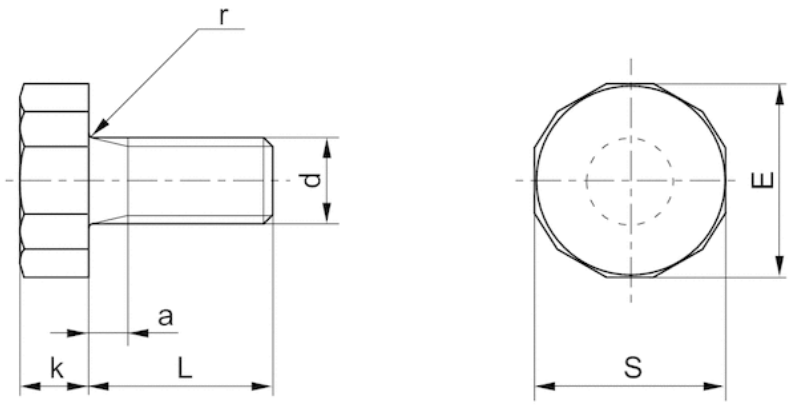

Fig. 2

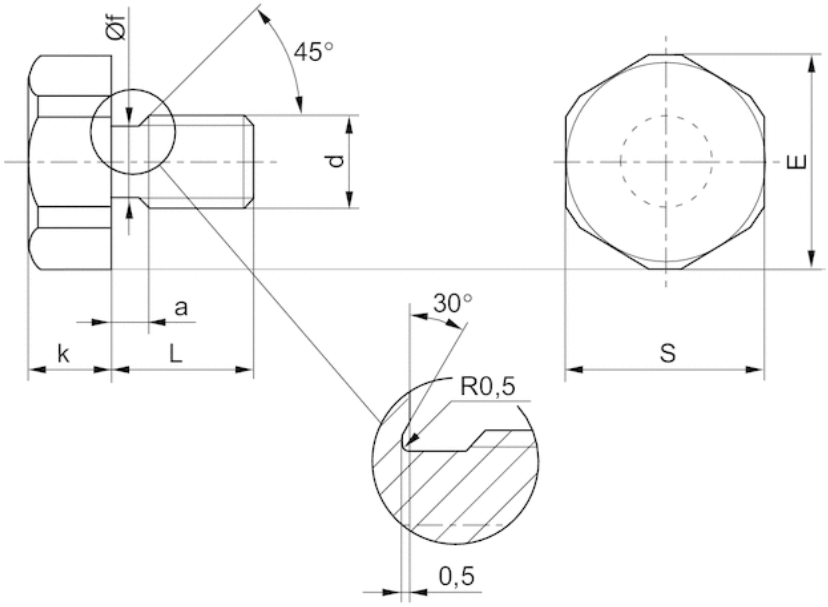

Dimensions in mm

Part No.	a	d	E	k	L	S	r
R412024762	2	M4	9.8	3.9	10	9.8	0.5
R412024763	3	M5	11	4	12	12	0.5
R402003749	3	M6	14	5.3	16	13	0.7
R402003750	3	M8	18	6.4	17	16	0.7
R402003751	4	M10	24	7,9	8.8	15	21
R402003752	4	M12	30	9,5	11.5	18	27

Piston rod nut MR9



Weight See table below

Technical data

Part No.	Suitable piston rod thread	Material	Weight	
8103190464	M10x1,25	Stainless steel	0,008 kg	-
3590304000	M12x1,25	Stainless steel	0,02 kg	-
3590305000	M16x1,5	Stainless steel	0,03 kg	1)
3590308000	M20x1,5	Stainless steel	0,05 kg	-
2990600312	M27x2	Stainless steel, acid-proof	0,07 kg	-

1) 3590305000 can also be used as an MR3, nut for cylinder mounting.

Technical information

Material	
	Stainless steel Stainless steel, acid-proof

Dimensions

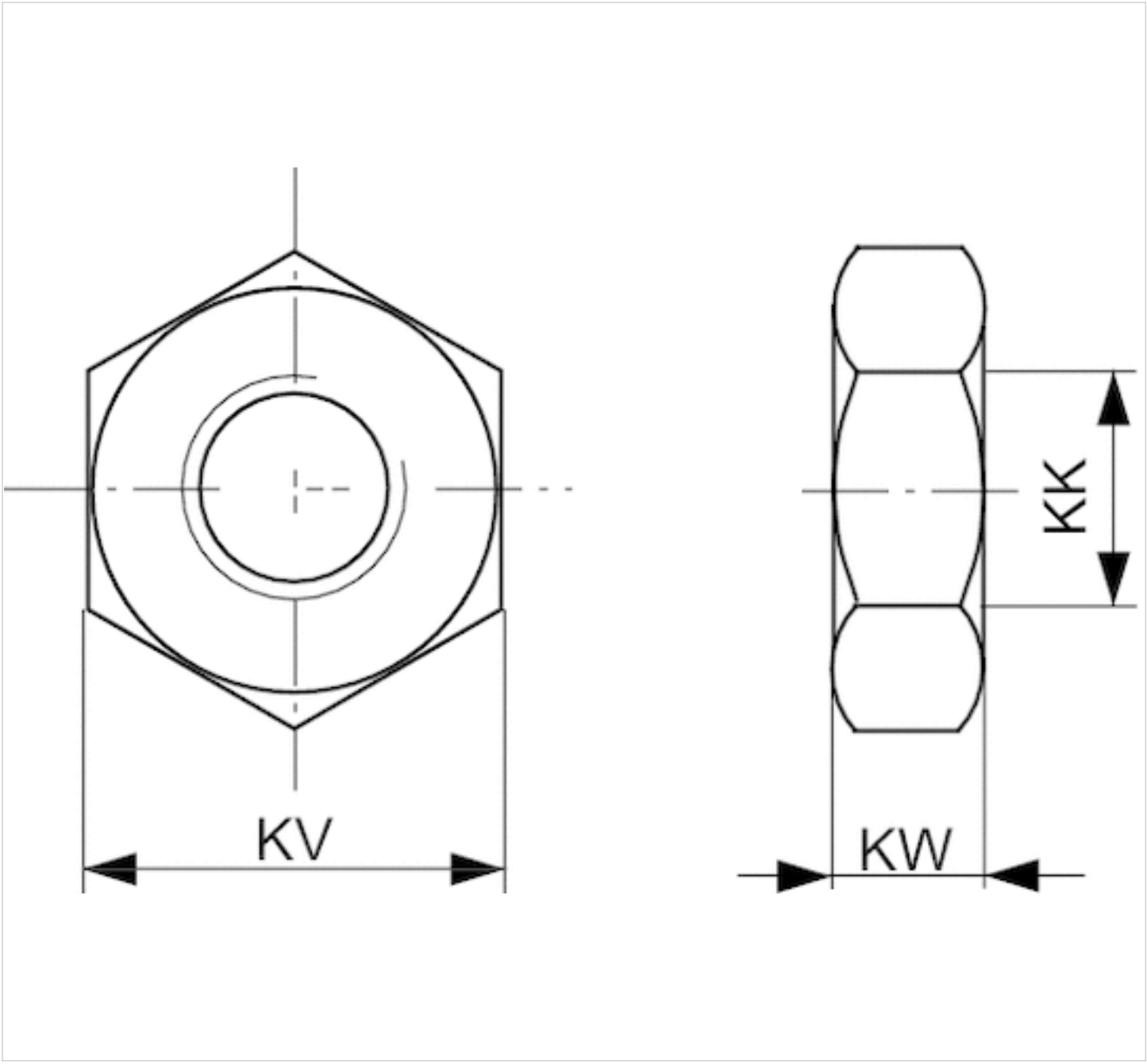

Dimensions

Part No.	KK	KV	KW
8103190464	M10x1,25	17	5
3590304000	M12x1,25	19	6
3590305000	M16x1,5	24	8
3590308000	M20x1,5	30	10
2990600312	M27x2	41	13.5

Rod clevis AP2, Series CM2

- with circlip, to mount on cylinder CCL-IS/IC, CCI, SSI, CSL-RD, ICM, ICS-D2, 167



Weight See table below

Technical data

Part No.	Suitable piston rod thread	for	Weight
3590502000	M10x1,25	CCL-IS CCL-IC CCI CSL-RD SSI ICM ICS-D2 167	0,1 kg
3590504000	M12x1,25	CCL-IS CCL-IC CCI SSI 167 ICS-D2	0,16 kg
3590505000	M16x1,5	CCL-IS ICS-D2 167	0,4 kg
3590508000	M20x1,5	CCL-IS ICS-D2 167	0,7 kg

Technical information

Material	
	Stainless steel

Dimensions

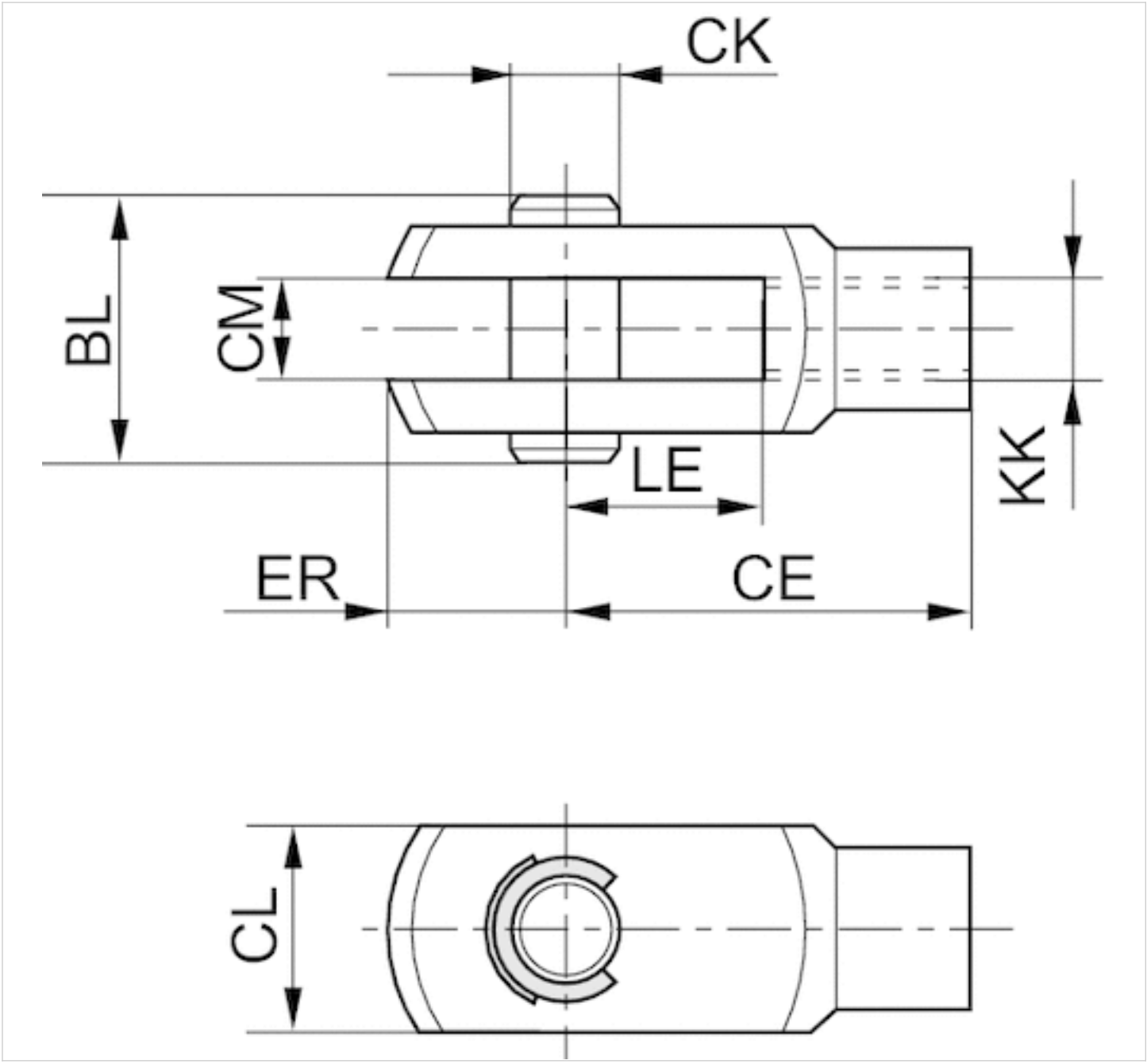

Dimensions

Part No.	KK	CE	CK e8	CL	CM B12	ER	BL	LE
3590502000	M10x1,25	40	10	20	10	12	26	20
3590504000	M12x1,25	48	12	24	12	14	31	24
3590505000	M16x1,5	64	16	32	16	19	39	32
3590508000	M20x1,5	80	20	40	20	20	49	40

Rod clevis AP2, Series CM2

- to mount on cylinder PRA, TRB, CCI, MNI, ICM, KPZ, KHZ, 167, CVI, RPC, RDC, ITS



Weight 2 kg

Technical data

Part No.	Suitable piston rod thread	for	Fig.
1827001493	M27x2	PRA TRB CCL-IS 167 CVI	Fig. 2

Technical information

Material	
	Steel
	galvanized

Dimensions

Fig. 1

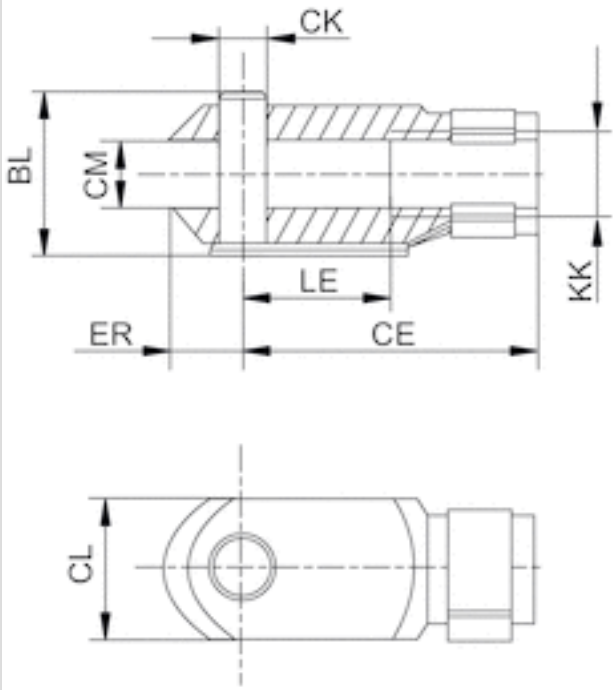

Fig. 2

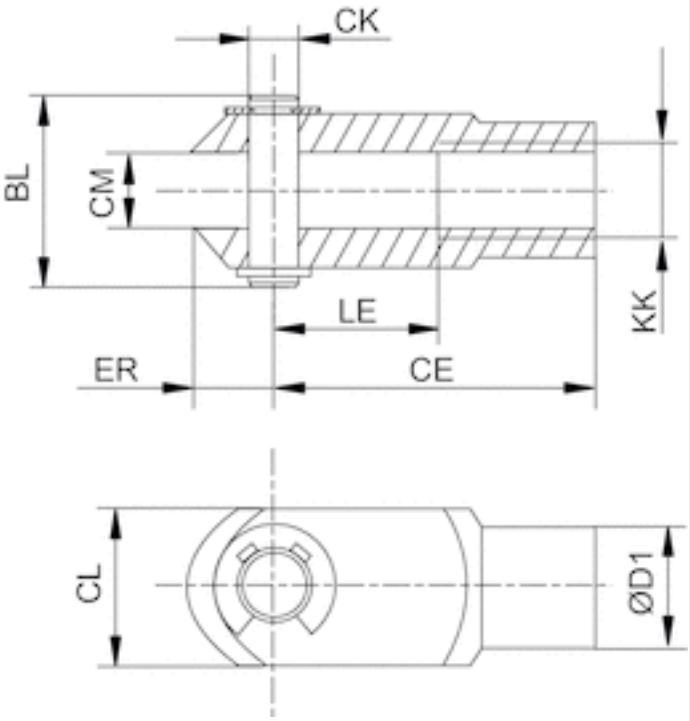

Dimensions

Part No.	KK	BL	CE	ØCK e11	CL	CM	ØD1	ER	LE	Fig.
1827001493	M27x2	68	110	30	55	30	48	38	54	Fig. 2

Ball eye rod end AP6, series CM2

- with flange, to mount on cylinder CCL-IS/IC, SSI, CSL-RD, ICM, ICS-D2



Weight See table below

Technical data

Part No.	Suitable piston rod thread	for	Swivel bearing Ø	Weight
8958209032	M10x1,25	CCL-IS CCL-IC SSI CSL-RD ICM ICS-D2	254 mm	0,09 kg
8958209042	M12x1,25	CCL-IS CCL-IC SSI ICS-D2	304,8 mm	0,12 kg
8958209052	M16x1,5	CCL-IS CCL-IC SSI ICS-D2	406,4 mm	0,23 kg
8958209062	M20x1,5	CCL-IS SSI ICS-D2	508 mm	0,41 kg
8958209072	M27x2	CCL-IS	762 mm	1,24 kg

Technical information

Material	
	Stainless steel

Dimensions

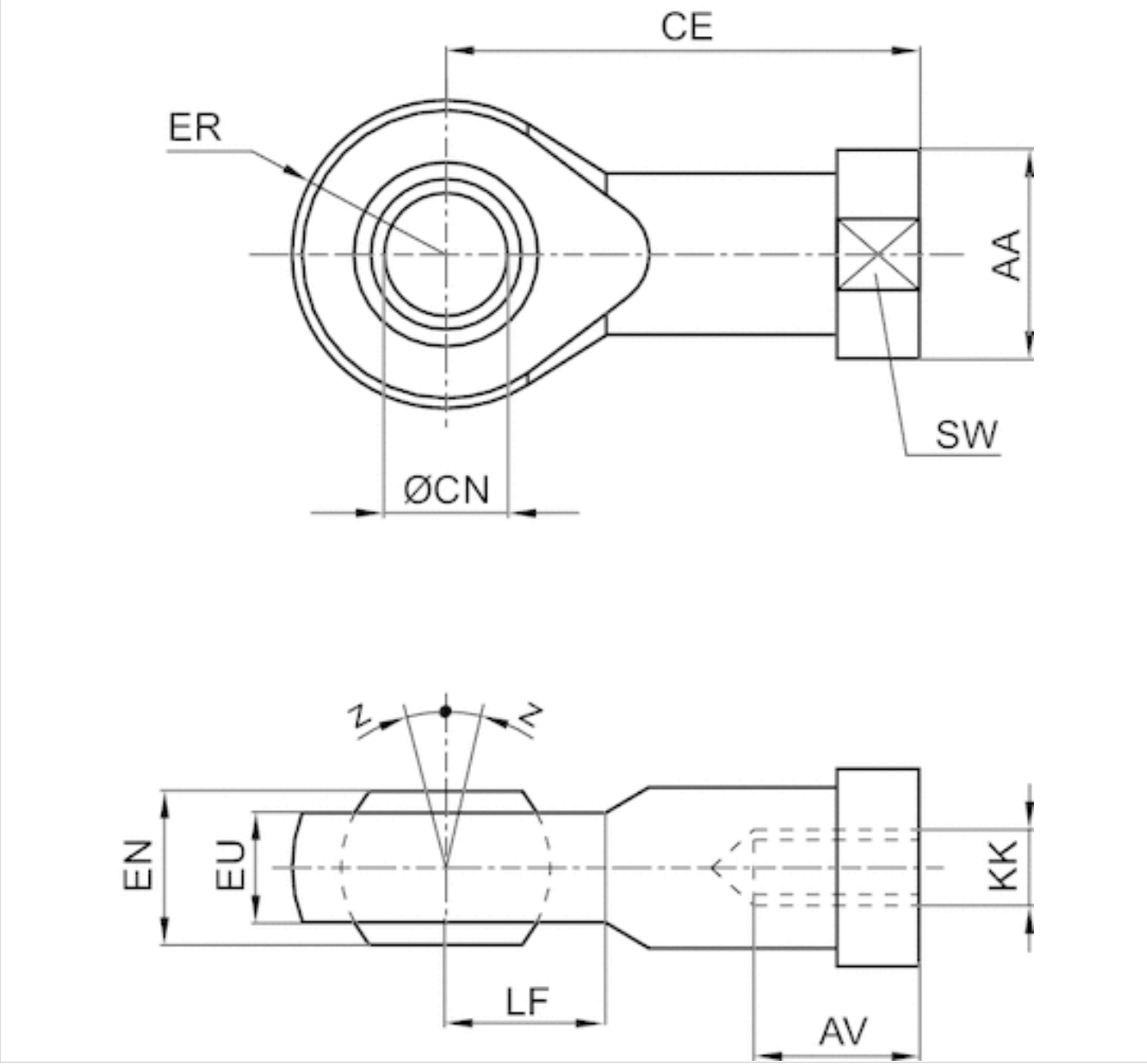

Dimensions

Part No.	KK	AA	AV min.	CE	Ø CN H7	EN –0,1	ER	EU max.	LF	SW	Z [°] max.
8958209032	M10x1,25	19	15	43	10	14	14	10.5	14	17	6,5
8958209042	M12x1,25	22	18	50	12	16	16	12	16	19	6,5
8958209052	M16x1,5	27	24	64	16	21	21	15	21	22	7,5
8958209062	M20x1,5	34	30	77	20	25	25	18	25	30	7,5
8958209072	M27x2	50	45	110	30	37	35	25	35	41	7,5

Compensating coupling PM5, series CM2

- to mount on cylinder PRA, TRB, CCL-IS/-IC, CCI, SSI, MNI, KPZ, KHZ, 167, CVI, RPC, RDC, ITS, spherical



Weight See table below

Technical data

Part No.	Suitable piston rod thread	for
R412026142	M10x1,25	PRA TRB CCL-IS CCL-IC CCI SSI KPZ 167 CVI RPC
R412026143	M12x1,25	PRA TRB CCI CCL-IS CCL-IC SSI KPZ 167 CVI RPC
R412026144	M16x1,5	PRA TRB CCI CCL-IS CCL-IC KPZ 167 CVI RPC RDC
R412026145	M20x1,5	PRA TRB CCL-IS SSI KPZ 167 CVI
1826409006	M27x2	PRA TRB CCL-IS CVI

Part No.	Weight
R412026142	0,21 kg
R412026143	0,21 kg
R412026144	0,65 kg
R412026145	0,68 kg
1826409006	1,7 kg

Technical information

Material	
	Steel
	galvanized

Dimensions

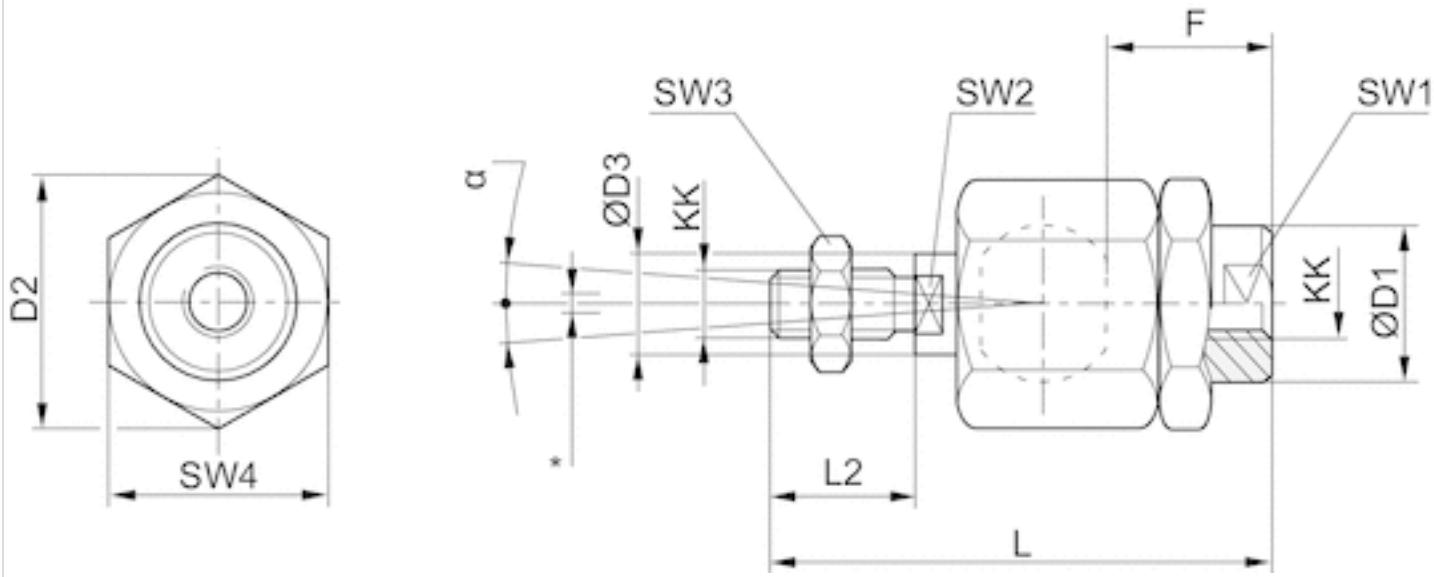

* Radial joint

Dimensions

Part No.	KK	Ø D1	D2	Ø D3	F	L ±2	L2	SW1	SW2	SW3	SW4	α [°]	1)	2)
R412026142	M10x1,25	22	32	14	23	74.5	23	19	12	17	30	8	0.05-0.5	0-2
R412026143	M12x1,25	22	32	14	24	75	24	19	12	19	30	7	0.05-0.5	0-2
R412026144	M16x1,5	32	45	22	30	103	30	30	20	24	41	6	0.05-0.5	0-2
R412026145	M20x1,5	32	45	22	40	119	40	30	20	30	41	6	0.05-0.5	0-2
1826409006	M27x2	62	62	28	48	147	54	32	24	41	55	8	0.05-0.2	0-2

1) Axial play
2) Radial play

Compensating coupling PM7, series CM2

- to mount on cylinder PRA, TRB, CCL-IS/-IC, CCI, SSI, KPZ, 167, CVI, RPC, ITS, with plate



Weight See table below

Technical data

Part No.	Suitable piston rod thread	for	Weight
1827001629	M10x1,25	PRA TRB CCL-IS CCL-IC CCI SSI KPZ RPC 167	0,3 kg
1827001630	M12x1,25	PRA TRB CCL-IS CCL-IC CCI SSI KPZ RPC 167	0,4 kg
1827001631	M16x1,5	PRA TRB CCL-IS CCL-IC CCI SSI KPZ RPC 167	0,9 kg
1827001632	M20x1,5	PRA TRB CCL-IS SSI KPZ CVI 167	1,15 kg
1827001633	M27x2	PRA TRB CCL-IS CVI	1,1 kg

Technical information

Material	
	Steel
	galvanized

Dimensions

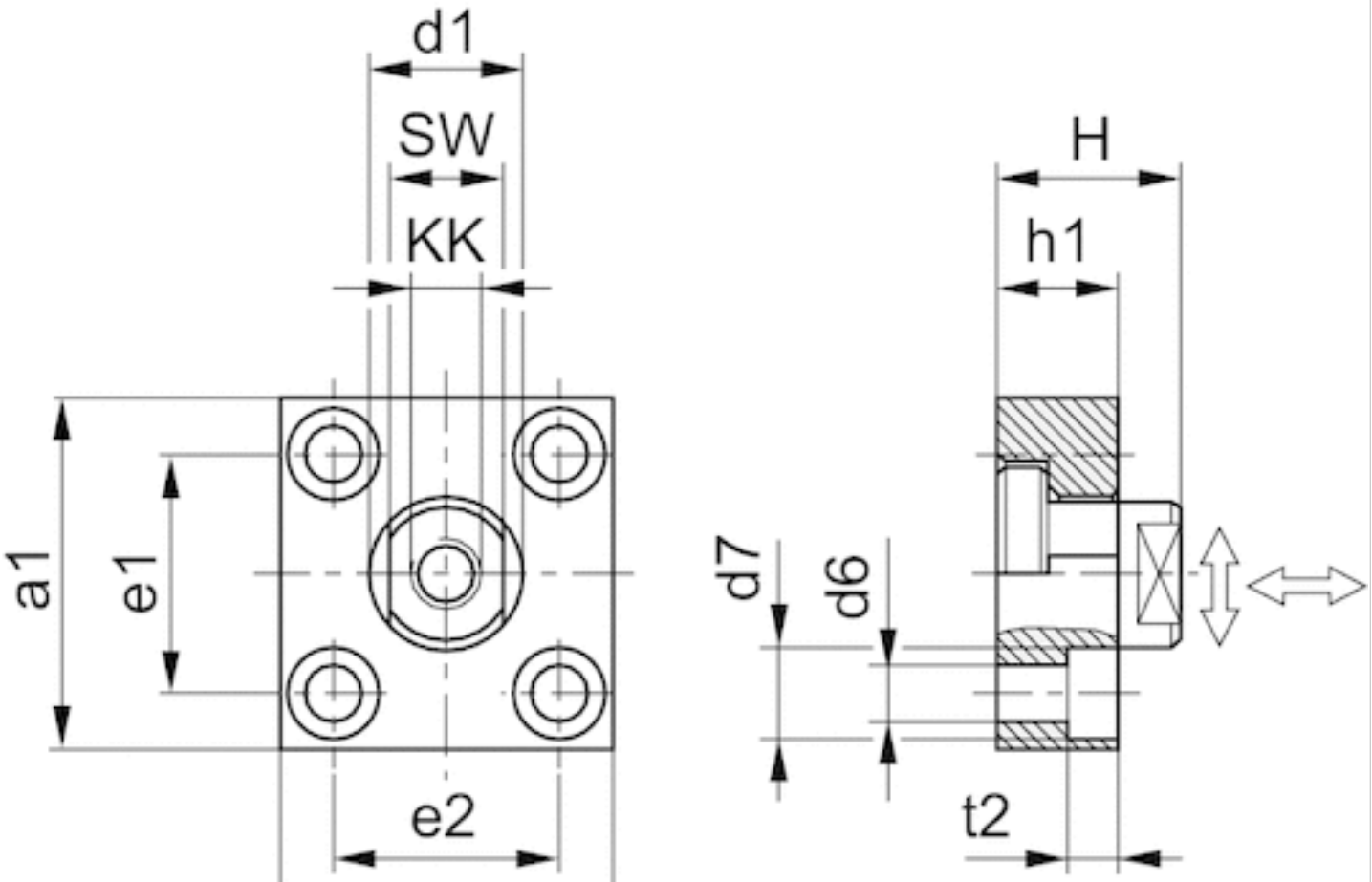

Dimensions

Part No.	a1	a2	d1 h11	d6 H13	d7 H13	e1 H13	e2	h1	t2	H	SW
1827001629	60	37	20	6.6	11	36 ±0,15	23 ±0,15	15	7	24	17
1827001630	60	56	25	9	15	42 ±0,2	38 ±0,2	20	9	30	19
1827001631	80	80	30	11	18	58 ±0,2	58 ±0,2	20	11	32	24
1827001632	90	90	40	14	20	65 ±0,3	65 ±0,3	20	13	35	36
1827001633	90	90	40	14	20	65 ±0,3	65 ±0,3	20	13	35	36

Tightening torque for the coupling pin Ma ± 5%	Axial play min./max.	Radial play min./max.
17 Nm	0,4 0,8 mm	1,9 2,3 mm

Tightening torque for the coupling pin Ma ± 5%	Axial play min./max.	Radial play min./max.
29 Nm	0,4 0,8 mm	1,9 2,3 mm
71 Nm	0,4 0,8 mm	1,9 2,3 mm
138 Nm	0,4 0,8 mm	1,9 2,3 mm
350 Nm	0,4 20,31 mm	1,9 2,3 mm

Modular scraper system

- Ø 32 mm ... 125 mm
- For series PRA, TRB, CCL-IS
- Piston Ø 32 40 50, 63 80, 100 125 mm



Working pressure min./max.	1,5 ... 10 bar
Ambient temperature min./max.	See table below
Medium	Compressed air
Oil content of compressed air	0 ... 5 mg/m³

Technical data

Part No.	Piston Ø	Piston rod seal	Scraper
0496400704	32 mm	Acrylonitrile butadiene rubber	Polyester elastomer
0496401107	32 mm	Acrylonitrile butadiene rubber	Polytetrafluorethylene
0496401700	32 mm	Fluorocaoutchouc	Polytetrafluorethylene
0496400402	40 mm	Acrylonitrile butadiene rubber	Brass
0496401409	40 mm	Fluorocaoutchouc	Brass
0496400801	40 mm	Acrylonitrile butadiene rubber	Polyester elastomer
0496401204	40 mm	Acrylonitrile butadiene rubber	Polytetrafluorethylene
0496401808	40 mm	Fluorocaoutchouc	Polytetrafluorethylene
0496400518	50, 63 mm	Acrylonitrile butadiene rubber	Brass
0496401506	50, 63 mm	Fluorocaoutchouc	Brass
0496400909	50, 63 mm	Acrylonitrile butadiene rubber	Polyester elastomer
0496402103	50, 63 mm	Acrylonitrile butadiene rubber	Polytetrafluorethylene
0496401905	50, 63 mm	Fluorocaoutchouc	Polytetrafluorethylene
0496400607	80, 100 mm	Acrylonitrile butadiene rubber	Brass
0496401603	80, 100 mm	Fluorocaoutchouc	Brass
0496401018	80, 100 mm	Acrylonitrile butadiene rubber	Polyester elastomer
0496402200	80, 100 mm	Acrylonitrile butadiene rubber	Polytetrafluorethylene
0496402006	80, 100 mm	Fluorocaoutchouc	Polytetrafluorethylene
0496301404	125 mm	Acrylonitrile butadiene rubber	Brass
0496303105	125 mm	Fluorocaoutchouc	Brass
0496301307	125 mm	Acrylonitrile butadiene rubber	Polyester elastomer
0496301706	125 mm	Acrylonitrile butadiene rubber	Polytetrafluorethylene
0496303202	125 mm	Fluorocaoutchouc	Polytetrafluorethylene

Part No.	Ambient temperature min./max.	Application area
0496400704	-20 ... 80 °C	1)
0496401107	-20 ... 80 °C	2)

Part No.	Ambient temperature min./max.	Application area
0496401700	-10 ... 150 °C	2)
0496400402	-20 ... 80 °C	3)
0496401409	-10 ... 150 °C	3)
0496400801	-20 ... 80 °C	1)
0496401204	-20 ... 80 °C	2)
0496401808	-10 ... 150 °C	2)
0496400518	-20 ... 80 °C	3)
0496401506	-10 ... 150 °C	3)
0496400909	-20 ... 80 °C	1)
0496402103	-20 ... 80 °C	2)
0496401905	-10 ... 150 °C	2)
0496400607	-20 ... 80 °C	3)
0496401603	-10 ... 150 °C	3)
0496401018	-20 ... 80 °C	1)
0496402200	-20 ... 80 °C	2)
0496402006	-10 ... 150 °C	2)
0496301404	-20 ... 80 °C	3)
0496303105	-10 ... 150 °C	3)
0496301307	-20 ... 80 °C	1)
0496301706	-20 ... 80 °C	2)
0496303202	-10 ... 150 °C	2)

1)Application area Paper/printing industry Textile industry

2)Application area Textile industry Food industry Chemical industry Sugar production

3)Application area Chemical industry Sugar production Steel construction Automotive industry Woodworking industry

Technical information

Material	
Housing	Aluminum, anodized
Scraper	Polyester elastomer Polytetrafluorethylene Brass
Piston rod seal	Acrylonitrile butadiene rubber Fluorocaoutchouc

Dimensions

For cylinder diameters: 32-40 mm, Dimensions in mm

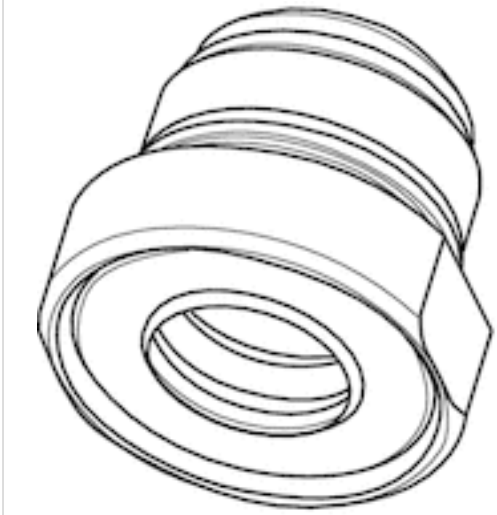

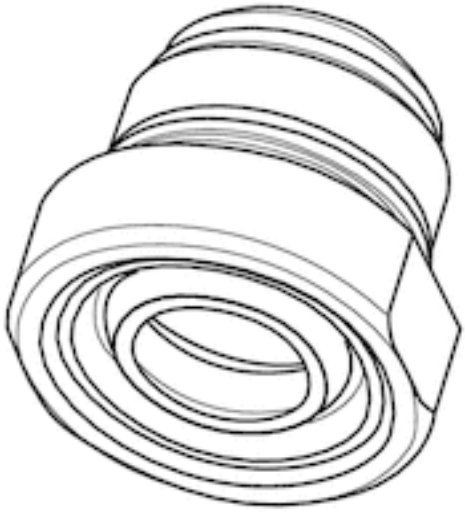

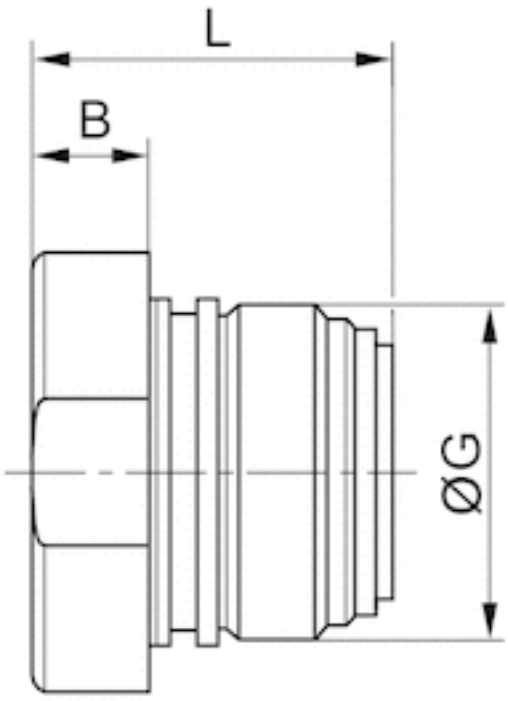

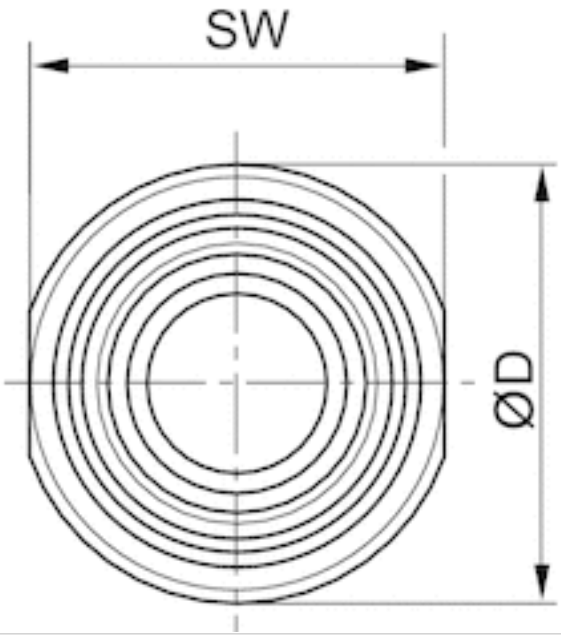

For cylinder diameters: 50 ... 125 mm, Dimensions in mm

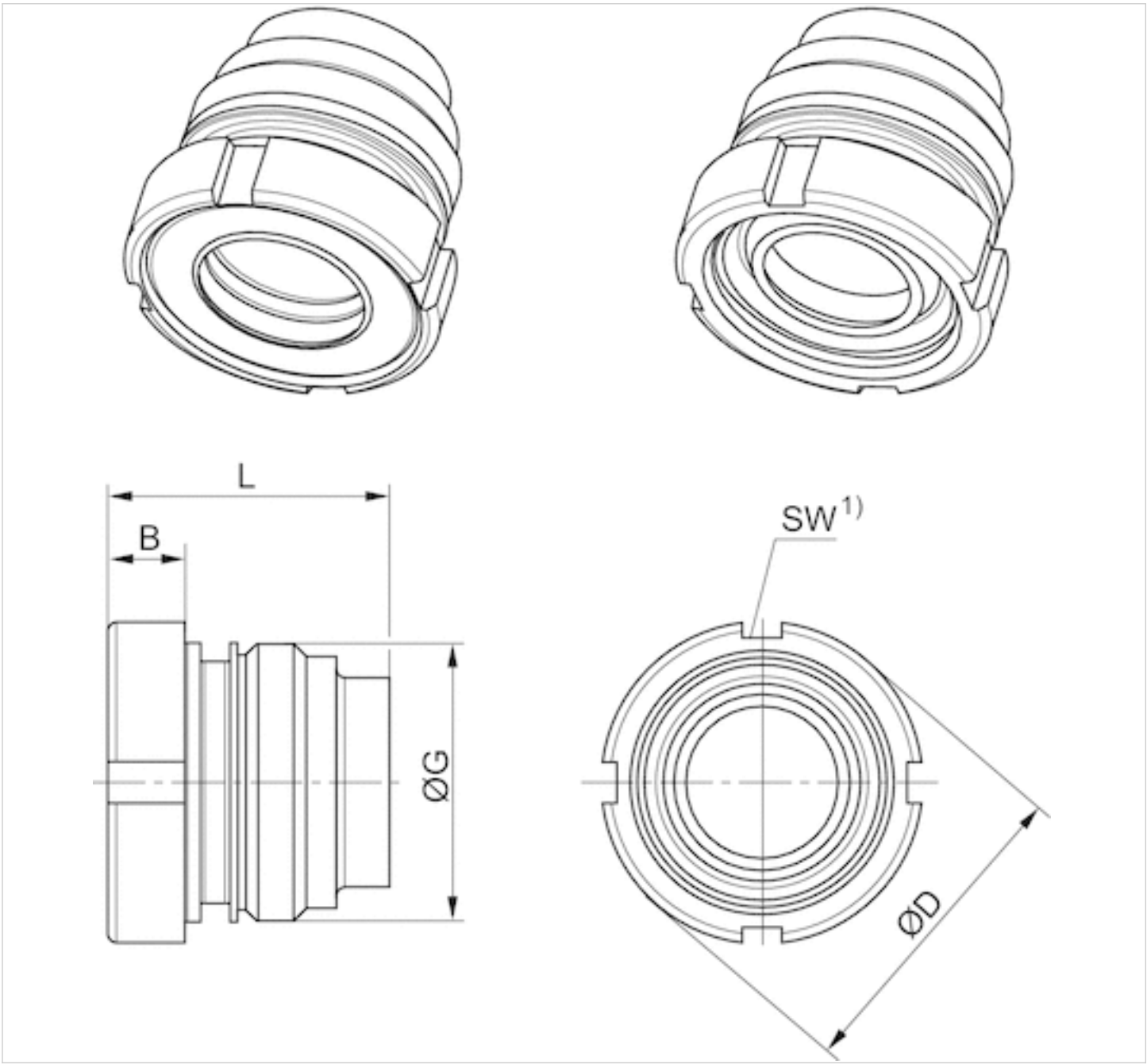

1) Can be mounted with hook wrench in accordance with DIN 1810 A

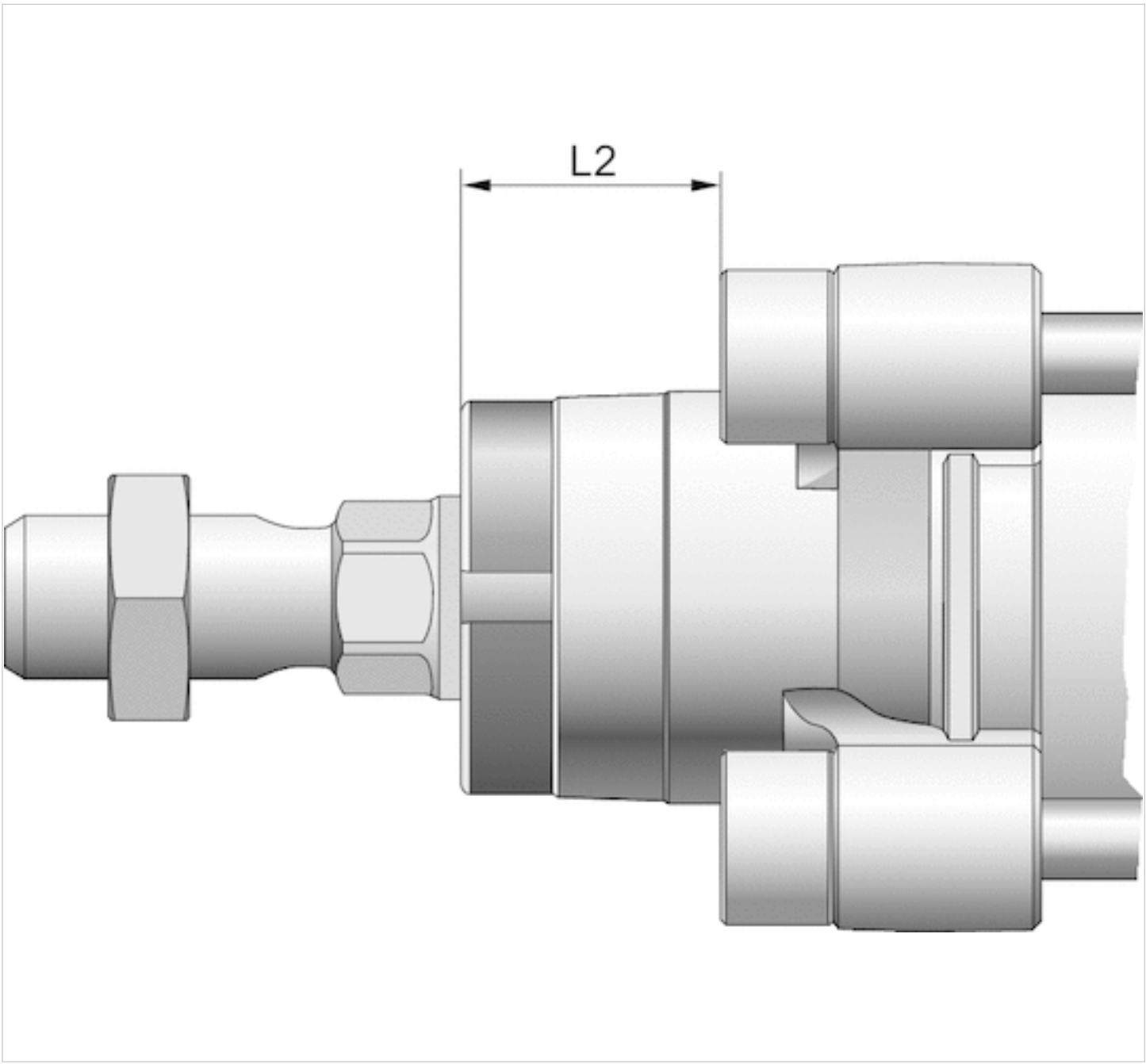

Dimensions

Piston Ø	B	ØD	G	L	L2	SW
32	6.7	24.5	M22x1	23	16.25	23
40	9.2	34	M26x1,5	28.1	18.25	32
50, 63	9	38.5	M33x2	33.5	25	40-42
80, 100	10	44	M40x2	44	33	45-50
125	12	57	M50x2	56	45	58-62

Dimensions

For cylinder diameters: 32-40 mm, Dimensions in mm

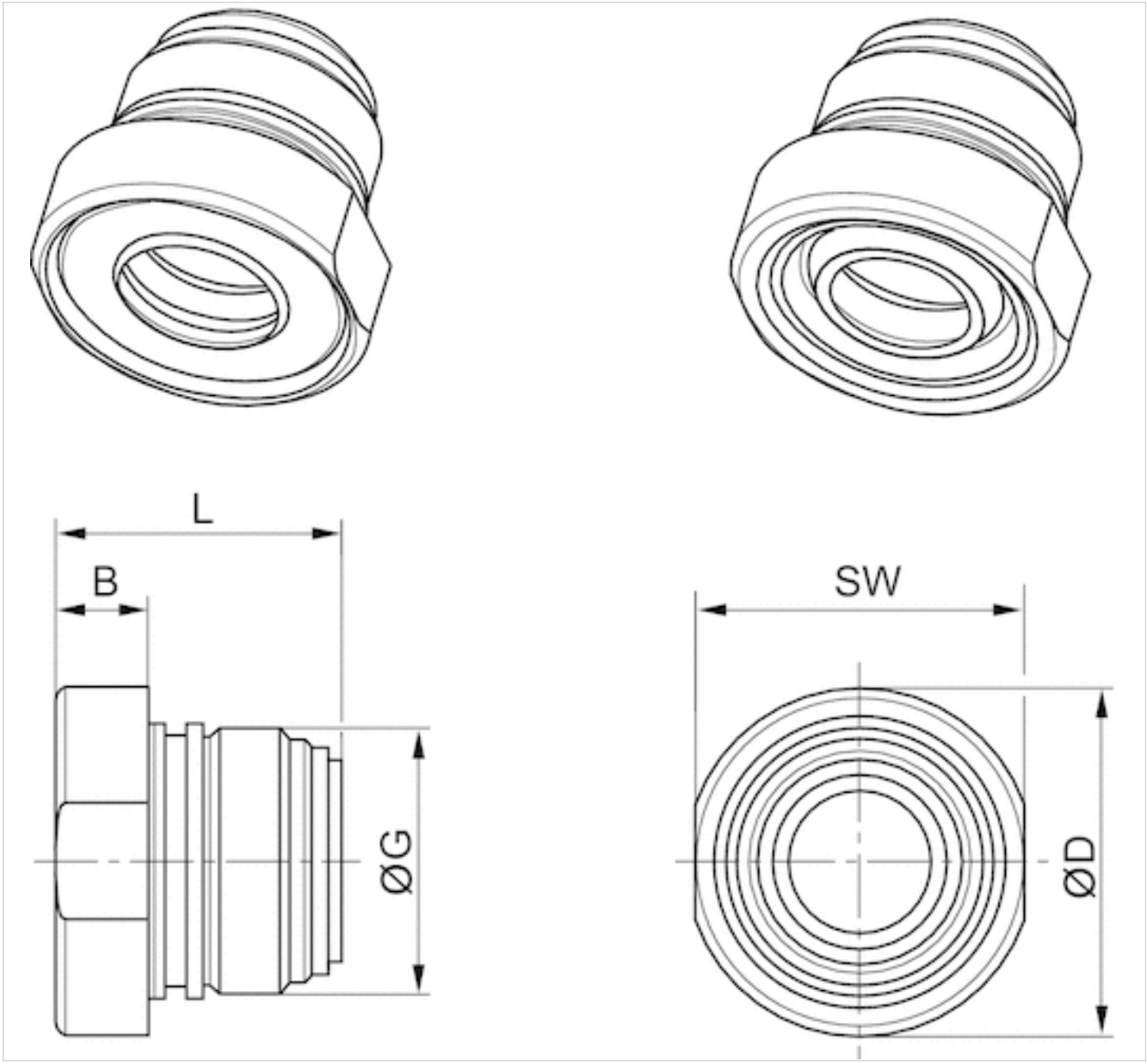

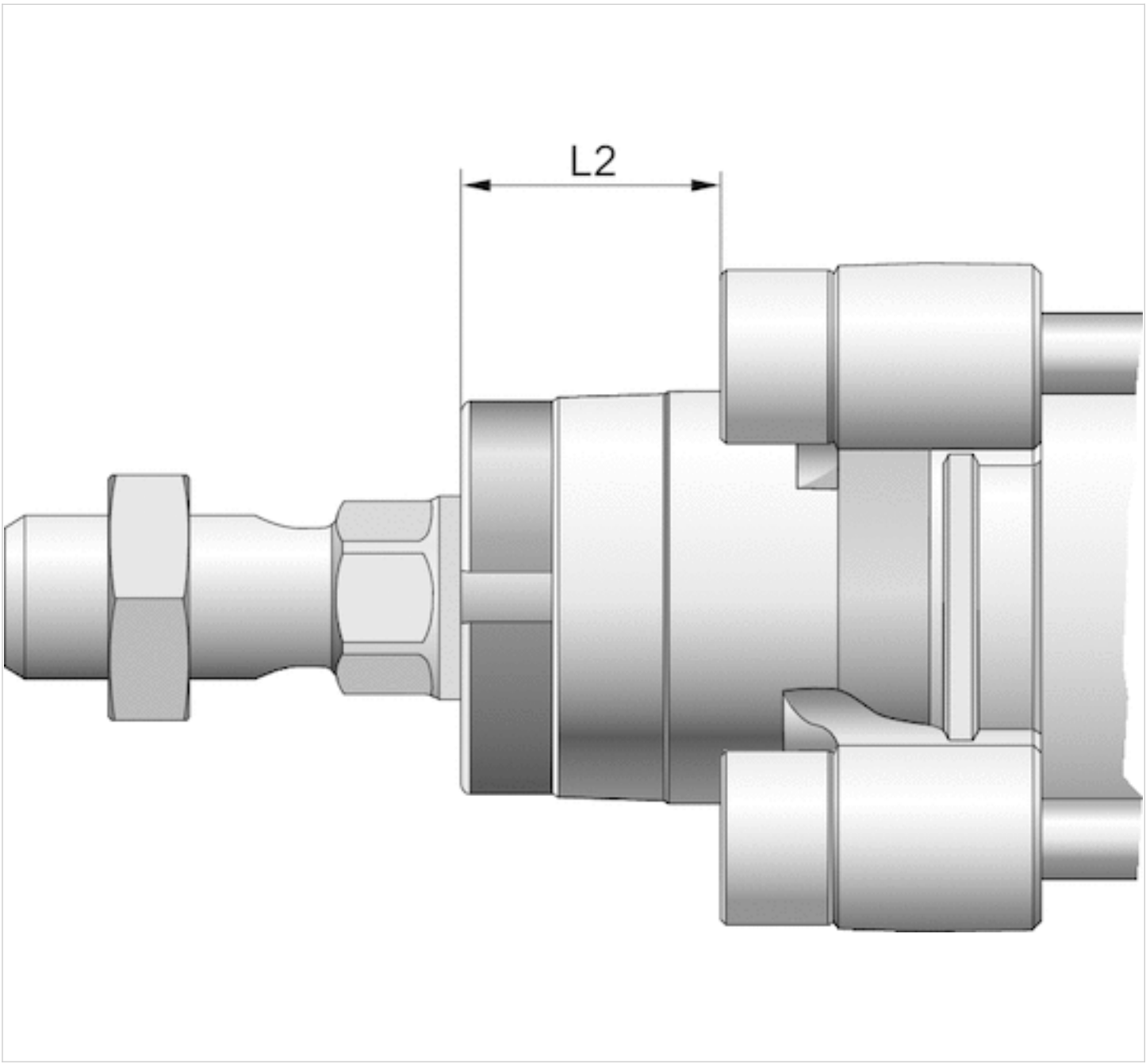

Dimensions

Piston Ø	B	ØD	G	L	L2	SW
32	6.7	24.5	M22x1	23	16.25	23
40	9.2	34	M26x1,5	28.1	18.25	32
50, 63	9	38.5	M33x2	33.5	25	40-42
80, 100	10	44	M40x2	44	33	45-50
125	12	57	M50x2	56	45	58-62

Dimensions

For cylinder diameters: 50 ... 125 mm, Dimensions in mm

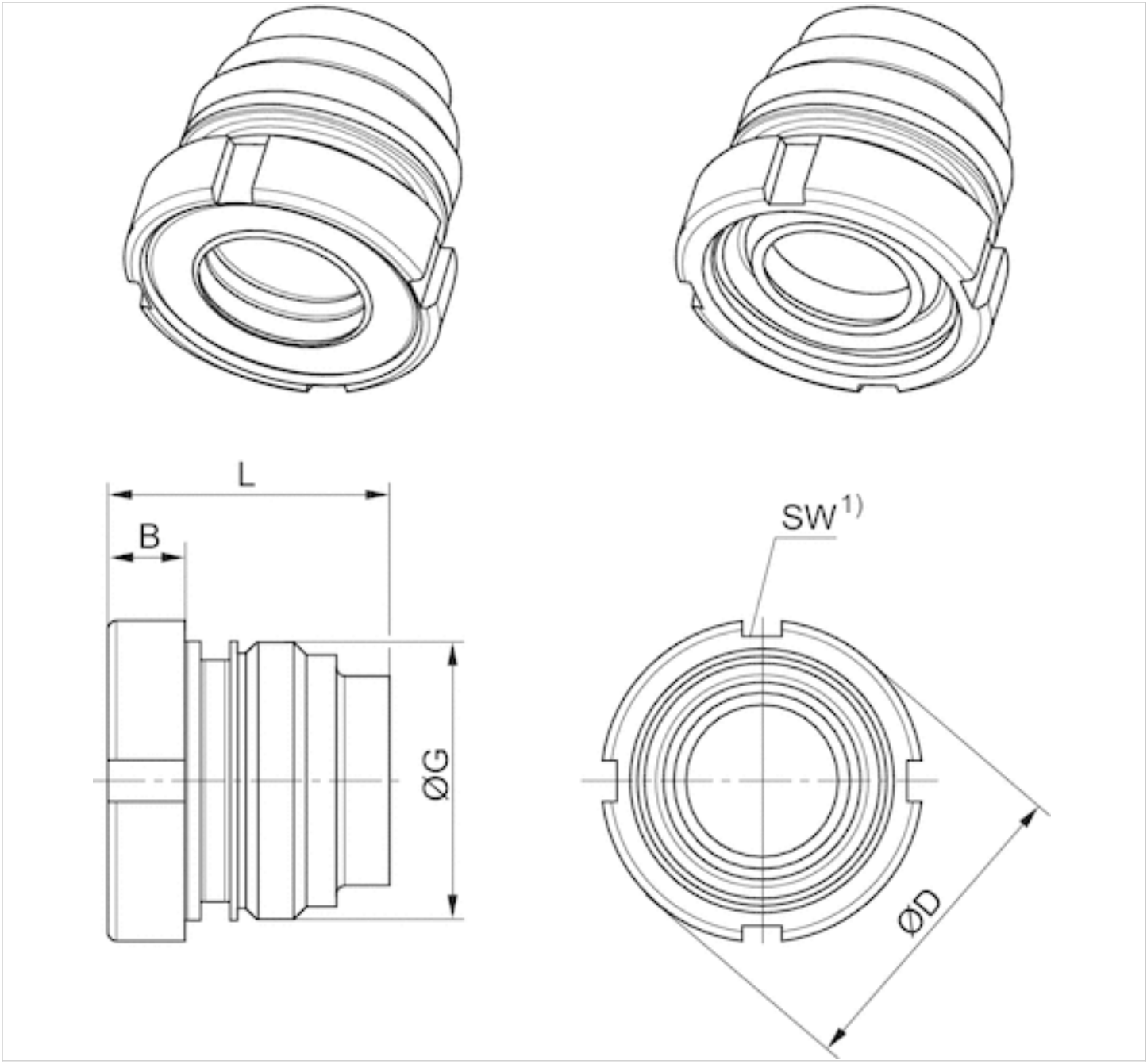

1) Can be mounted with hook wrench in accordance with DIN 1810 A

Front lube unit

- continuous lubrication of the piston rod during every cycle
- For series CCL-IS
- Piston Ø 32 40 50, 63 80, 100 125 mm



Working pressure min./max.	1,5 ... 10 bar
Ambient temperature min./max.	-20 ... 80 °C
Medium	Compressed air
Oil content of compressed air	0 ... 5 mg/m³

Technical data

Part No.	Piston Ø
R412027884	32 mm
R412027885	40 mm
R412027886	50, 63 mm
R412027887	80, 100 mm
R412027888	125 mm

Technical information

Material	
Housing	Aluminum, anodized
Scraper	Polyester elastomer
Piston rod seal	Polyester elastomer

Dimensions

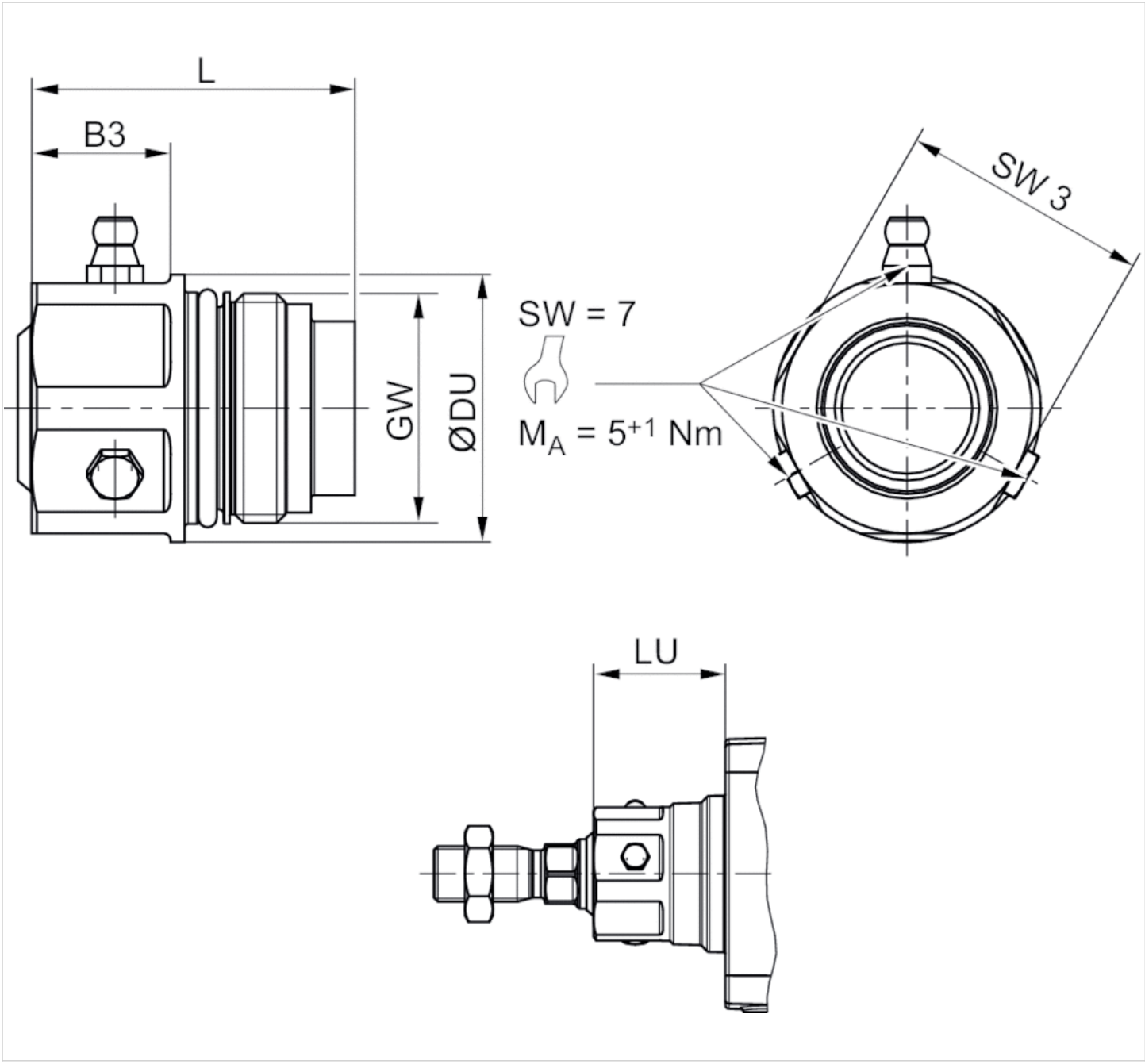

Dimensions

Part No.	Piston Ø	SW 3	MA [Nm]	GW	DU	L	B3	LU
R412027884	32 mm	24	20	M22x1	27.5	36	6	29.25
R412027885	40 mm	30	20	M26x1.5	34	41.1	20	31.25
R412027886	50, 63 mm	36	30	M33x2	38.5	46.5	20	38
R412027887	80, 100 mm	41	40	M40x2	44	57	21	46
R412027888	125 mm	50	50	M50x2	57	69	23	58

Series CAT

- Measuring instrument for adjusting the pneumatic cushioning
- for MNI, CSL-RD, CCL-IS, ICS, RPC, PRA/TRB, ITS



Certificates	CE declaration of conformity
Ambient temperature min./max.	0 ... 40 °C
Measurement range Min.	0,2 m/s
Measurement range Max.	2 m/s
LED status display	Green Yellow Red
Protection class	IP50
Weight	0,12 kg

Technical data

Part No.	for series
R412026160	MNI, CSL-RD, CCL-IS, ICS, RPC, PRA/TRB, ITS

Scope of delivery: 1 measuring instrument, 2 fastening strips, 1 power pack 3.7 V, 1 USB charging cable, Operating instructions, QR code notice, 1 case with foam inlay

Technical information

The CAT measuring instrument uses Bluetooth radio technology for wireless connection with the "Aventics" app, which is available free of charge in the Android/Play Store and/or the IOS/App Store.

Technical information

Material	
Housing	Luran S

Dimensions

Dimensions

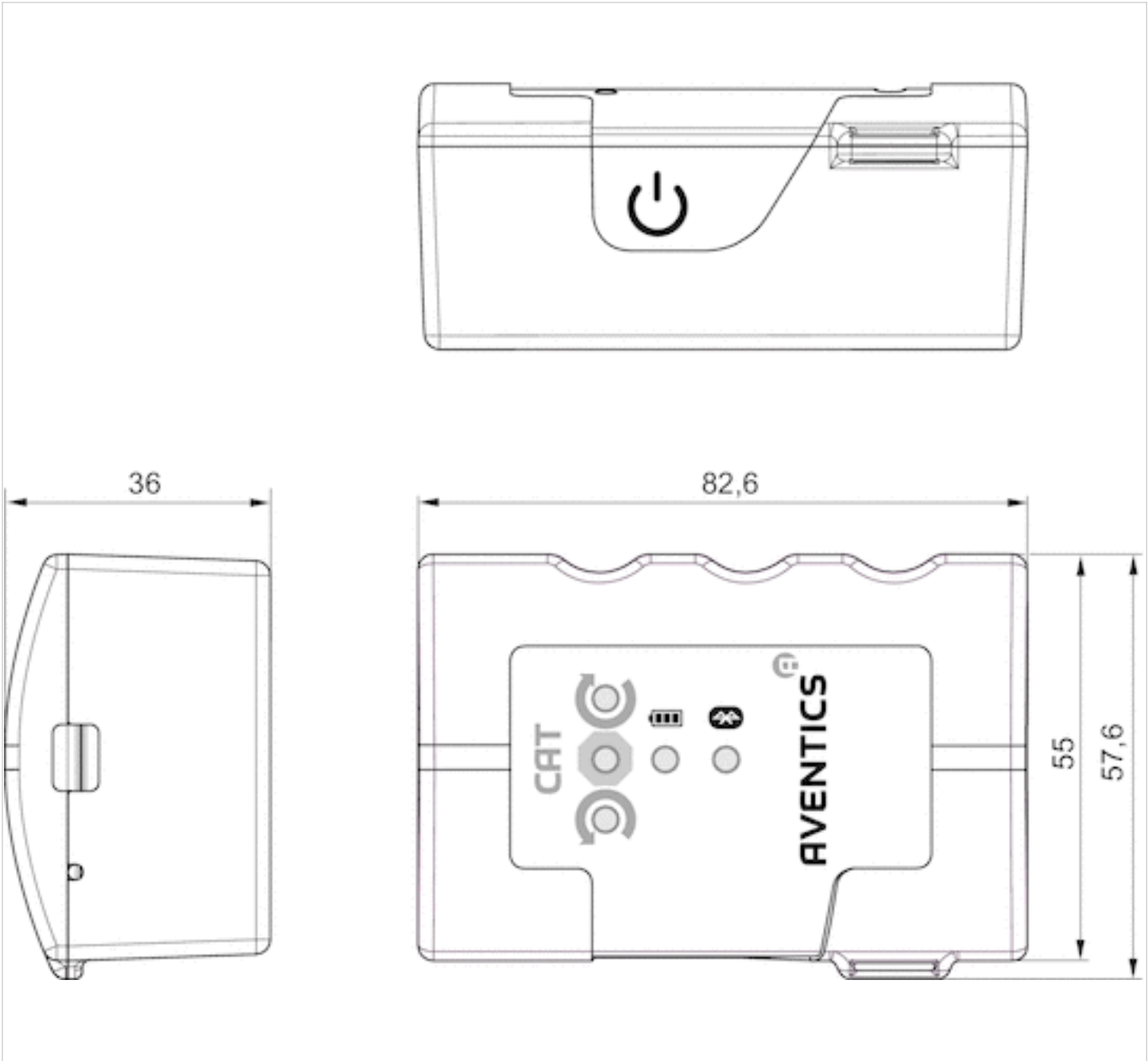

Sensor, Series ST6

- 6 mm T-slot
- with cable
- open cable ends, 3-pin
- ATEX
- UL certification, ATEX
- electronic PNP
- Direct mounting for series PRA, PRE, CCI, KPZ, SSI, GPC, CVI
- Indirect mounting for series TRB, ITS, CCL-IS, MNI, CSL-RD, RPC, ICS-D2, ICM, KHZ, TRR



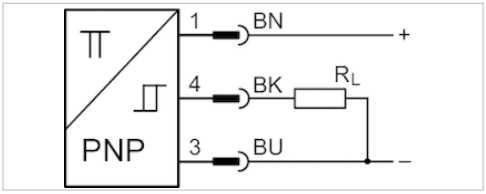

Certificates	ATEX CE declaration of conformity cULus RoHS
ATEX class G	II 3G Ex nA IIC T4 Gc X
ATEX class D	II 3D Ex tc IIIC T135°C Dc X
Ambient temperature min./max.	-20 ... 50 °C
Protection class	IP67
Switching point precision	±0,1 mT
Quiescent current (without load)	10 mA
Min./max. DC operating voltage	10 ... 30 V DC
Switching logic	NO (make contact)
LED status display	Yellow
Vibration resistance	10 - 55 Hz, 1 mm
Shock resistance	30 g / 11 ms
Cable length L	3 5 m

Technical data

Part No.	for	Type of contact	Cable length L
R412022854	PRA, PRE, CCI, KPZ, SSI, GPC, CVI	electronic PNP	3 m
R412022856	PRA, PRE, CCI, KPZ, SSI, GPC, CVI	electronic PNP	5 m

Part No.	Voltage drop U at Imax	DC switching current, max.
R412022854	≤ 2,5 V	0,1 A
R412022856	≤ 2,5 V	0,1 A

Part No.	Max. switching frequency
R412022854	1000 Hz
R412022856	1000 Hz

Part No.	Version
R412022854	short circuit resistant Protected against polarity reversal

Part No.	Version
R412022856	short circuit resistant Protected against polarity reversal

Technical information

Material	
Housing	Polyamide
Cable sheath	Polyurethane
Locking screw	Stainless steel

Dimensions

Fig. 2

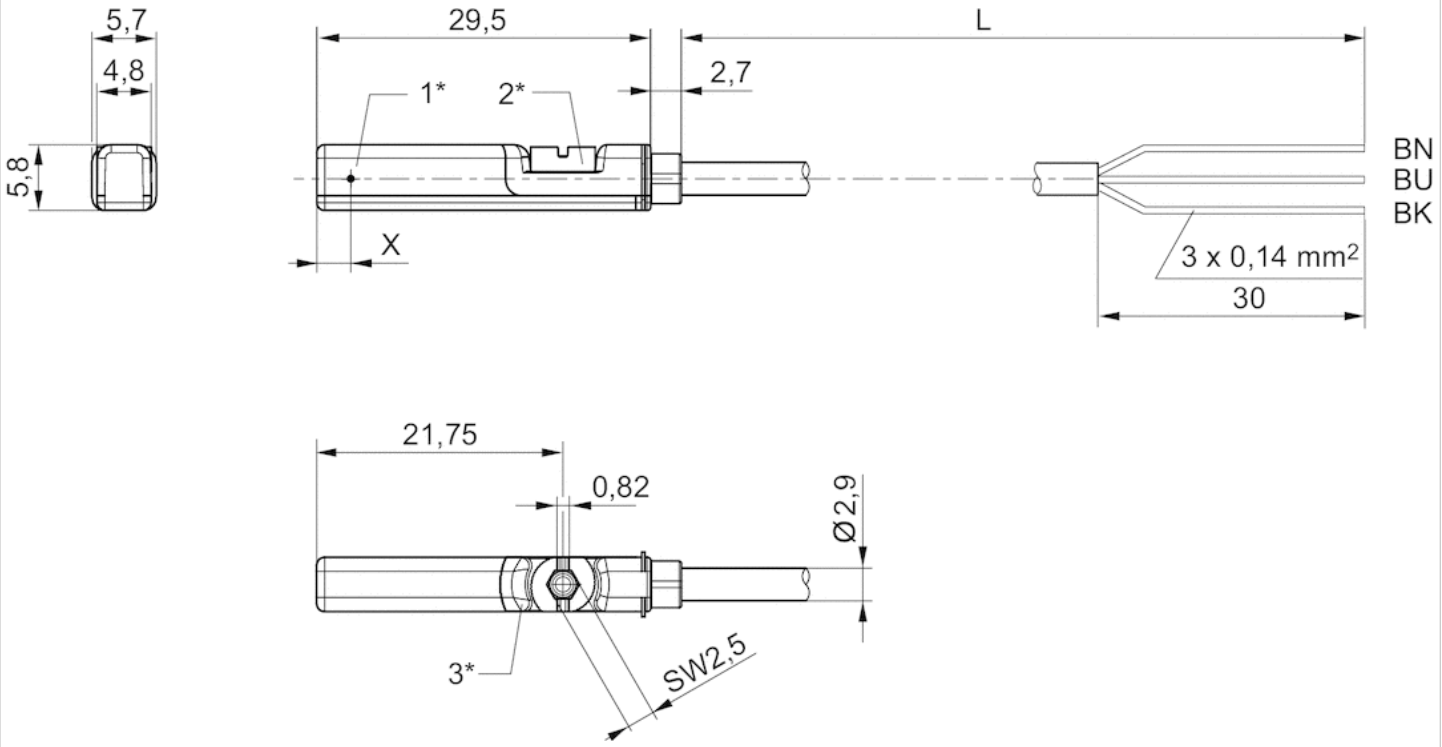

1* = switching point 2* = locking screw 3* = LED window, transparent
L = cable length
BN = brown, BK = black, BU = blue
X = electronic: 11.6 mm

Sensor, Series ST6

- 6 mm T-slot
- with cable
- open cable ends, 2-pin open cable ends, 3-pin
- UL certification
- Reed electronic PNP electronic NPN
- Direct mounting for series PRA, PRE, CCI, KPZ, SSI, GPC, CVI
- Indirect mounting for series TRB, ITS, CCL-IS, MNI, CSL-RD, RPC, ICS-D2, ICM, KHZ, TRR



Ambient temperature min./max.	-30 ... 80 °C
Protection class	IP65 IP67 IP69K
Switching point precision	±0,1 mT
Nominal current, actuated state	30 mA
Quiescent current (without load)	8 mA
Min./max. DC operating voltage	See table below
Min./max. AC operating voltage	See table below
Hysteresis	≥ 0,2 mT
Switching logic	NO (make contact)
LED status display	Yellow
Vibration resistance	10 - 55 Hz, 1 mm
Shock resistance	30 g / 11 ms
Cable length L	3 5 10 m

Technical data

Part No.		for	Type of contact
R412022866		PRA, PRE, CCI, KPZ, SSI, GPC, CVI	Reed
R412027170		PRA, PRE, CCI, KPZ, SSI, GPC, CVI	Reed
R412022869		PRA, PRE, CCI, KPZ, SSI, GPC, CVI	Reed
R412022870		PRA, PRE, CCI, KPZ, SSI, GPC, CVI	Reed
R412022871		PRA, PRE, CCI, KPZ, SSI, GPC, CVI	Reed
R412022853		PRA, PRE, CCI, KPZ, SSI, GPC, CVI	electronic PNP
R412022855		PRA, PRE, CCI, KPZ, SSI, GPC, CVI	electronic PNP
R412022857		PRA, PRE, CCI, KPZ, SSI, GPC, CVI	electronic PNP
R412022849		PRA, PRE, CCI, KPZ, SSI, GPC, CVI	electronic NPN
R412022850		PRA, PRE, CCI, KPZ, SSI, GPC, CVI	electronic NPN

Part No.	Cable length L	Min./max. DC operating voltage	Min./max. AC operating voltage
R412022866	3 m	10 ... 230 V DC	10 ... 230 V AC
R412027170	5 m	10 ... 230 V DC	10 ... 230 V AC
R412022869	3 m	10 ... 30 V DC	10 ... 30 V AC
R412022870	5 m	10 ... 30 V DC	10 ... 30 V AC
R412022871	10 m	10 ... 30 V DC	10 ... 30 V AC
R412022853	3 m	10 ... 30 V DC	-
R412022855	5 m	10 ... 30 V DC	-
R412022857	10 m	10 ... 30 V DC	-
R412022849	3 m	10 ... 30 V DC	-
R412022850	5 m	10 ... 30 V DC	-

Part No.	Voltage drop U at Imax	DC switching current, max.
R412022866	≤ 3,5 V	0,13 A
R412027170	≤ 3,5 V	0,13 A
R412022869	I*Rs	0,3 A
R412022870	≤ 0,1 V	0,3 A
R412022871	I*Rs	0,3 A
R412022853	≤ 2,5 V	0,13 A
R412022855	≤ 2,5 V	0,13 A
R412022857	≤ 2,5 V	0,13 A
R412022849	≤ 2,5 V	0,13 A
R412022850	≤ 2,5 V	0,13 A

Part No.	AC switching current, max.	Switching capacity
R412022866	0,13 A	Reed, 2-pin: max. 10 W
R412027170	0,13 A	Reed, 2-pin: max. 10 W
R412022869	0,5 A	Reed, 3-pin: max. 6 W
R412022870	0,5 A	Reed, 3-pin: max. 6 W
R412022871	0,5 A	Reed, 3-pin: max. 6 W

Part No.	AC switching current, max.	Switching capacity
R412022853	-	-
R412022855	-	-
R412022857	-	-
R412022849	-	-
R412022850	-	-

Part No.	Max. switching frequency	Operating current, not switched
R412022866	400 Hz	-
R412027170	400 Hz	-
R412022869	400 Hz	-
R412022870	400 Hz	-
R412022871	400 Hz	-
R412022853	1000 Hz	8 mA
R412022855	1000 Hz	8 mA
R412022857	1000 Hz	8 mA
R412022849	1000 Hz	8 mA
R412022850	1000 Hz	8 mA

Part No.	Operating current, switched
R412022866	-
R412027170	-
R412022869	-
R412022870	-
R412022871	-
R412022853	30 mA
R412022855	30 mA
R412022857	30 mA
R412022849	30 mA
R412022850	30 mA

Part No.	Version	Fig.	
R412022866	Protected against polarity reversal	Fig. 1	1)
R412027170	Protected against polarity reversal	Fig. 1	1)
R412022869	Protected against polarity reversal	Fig. 2	2)
R412022870	Protected against polarity reversal	Fig. 2	2)
R412022871	Protected against polarity reversal	Fig. 2	2)
R412022853	short circuit resistant Protected against polarity reversal	Fig. 2	3)
R412022855	short circuit resistant Protected against polarity reversal	Fig. 2	3)
R412022857	short circuit resistant Protected against polarity reversal	Fig. 2	3)
R412022849	short circuit resistant Protected against polarity reversal	Fig. 2	3)
R412022850	short circuit resistant Protected against polarity reversal	Fig. 2	3)

1) open cable ends, 2-pin, The product of operating voltage and continuous current must not exceed the maximum switching capacity.

2) open cable ends, 3-pin, The product of operating voltage and continuous current must not exceed the maximum switching capacity.

3) open cable ends, 3-pin

Technical information

No cULus certification for 230 V variant.

Technical information

Material	
Housing	Polyamide
Cable sheath	Polyurethane
Locking screw	Stainless steel

Dimensions

Fig. 1

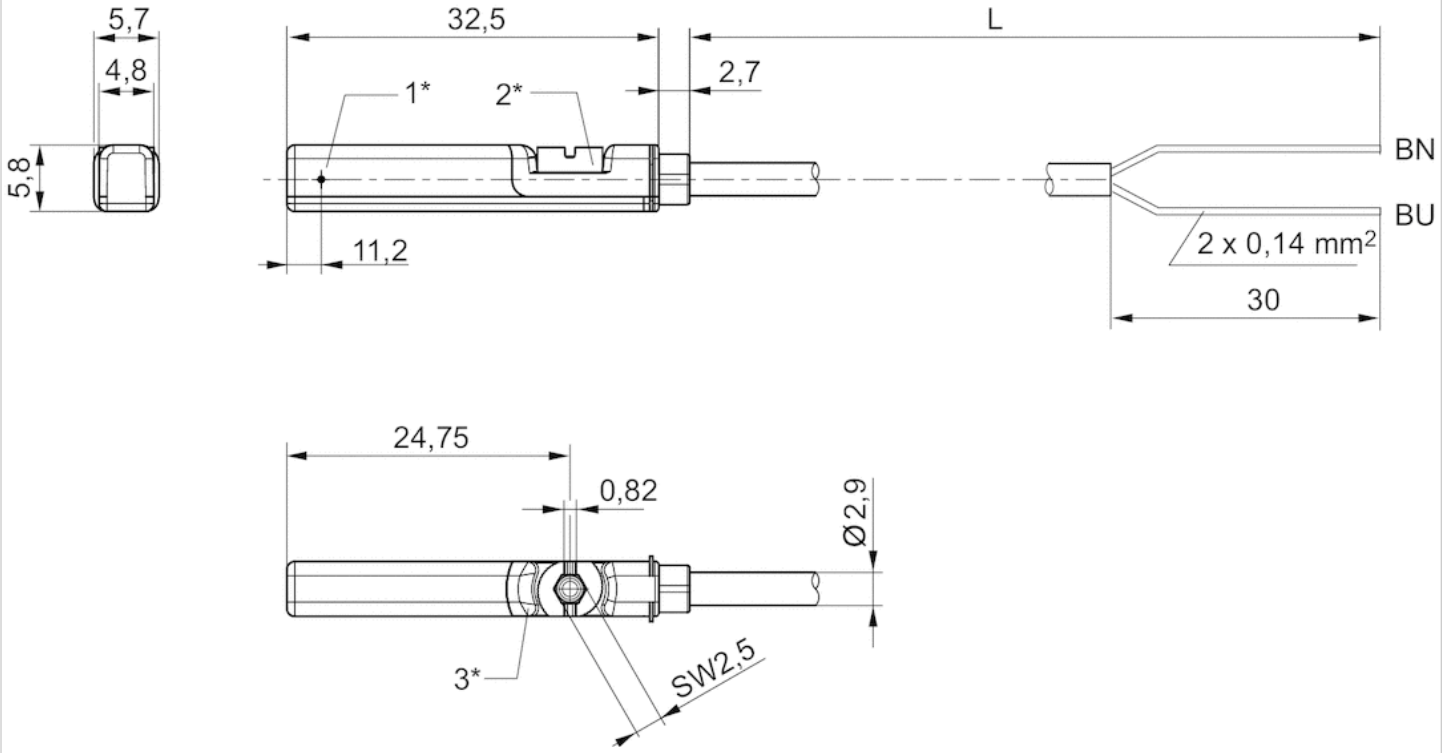

1* = switching point 2* = locking screw 3* = LED window, transparent
L = cable length
BN=brown, BU=blue

Fig. 2

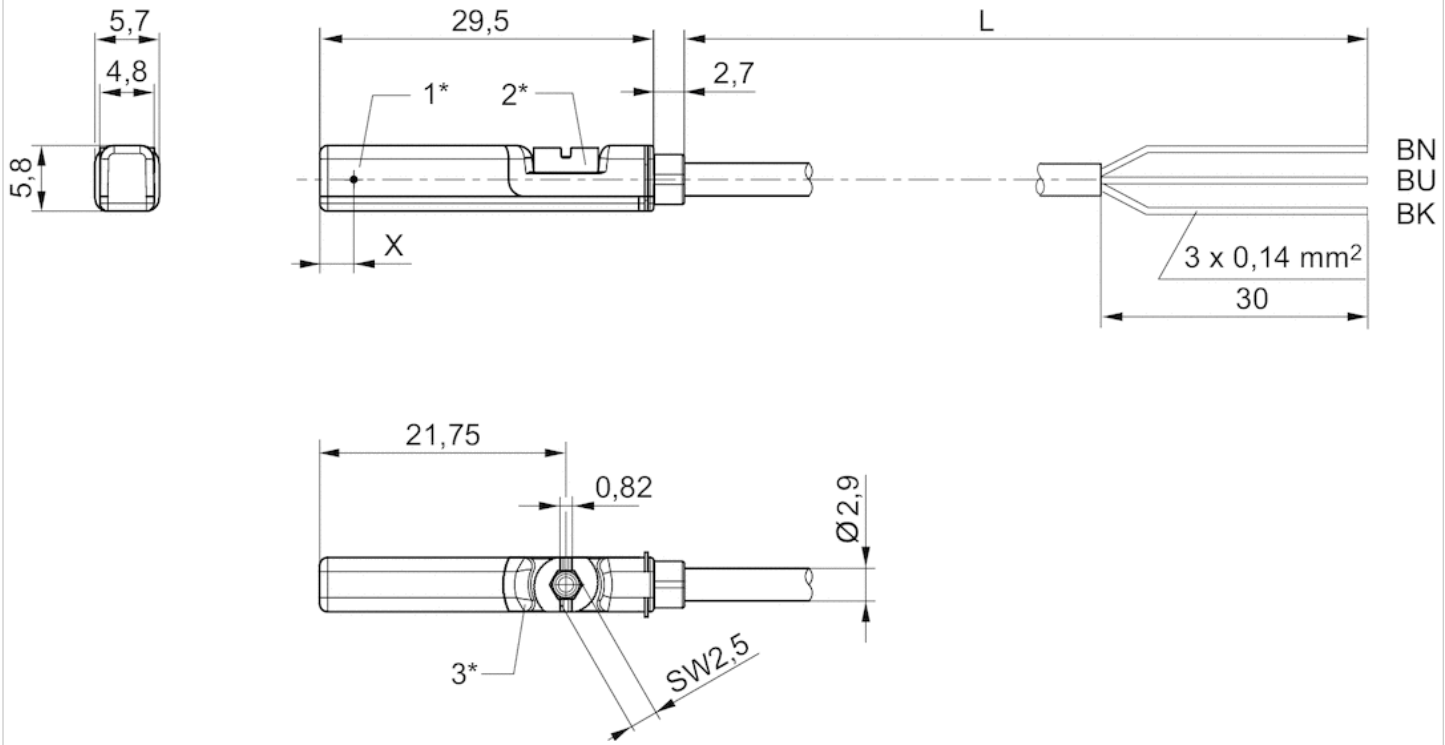

1* = switching point 2* = locking screw 3* = LED window, transparent
L = cable length
BN = brown, BK = black, BU = blue
X = electronic: 11.6 mm

Sensor, Series ST6

- 6 mm T-slot
- with cable
- Plug, M8x1, 3-pin Plug, M8x1, 2-pin
- UL certification
- Reed electronic PNP electronic NPN
- Direct mounting for series PRA, PRE, CCI, KPZ, SSI, GPC, CVI
- Indirect mounting for series TRB, ITS, CCL-IS, MNI, CSL-RD, RPC, ICS-D2, ICM, KHZ, TRR



Certificates	CE declaration of conformity cULus RoHS
Ambient temperature min./max.	-30 ... 80 °C
Protection class	IP65 IP67
Switching point precision	±0,1 mT
Nominal current, actuated state	30 mA
Quiescent current (without load)	8 mA
Min./max. DC operating voltage	10 ... 30 V DC
Min./max. AC operating voltage	See table below
Hysteresis	≥ 0,2 mT
Switching logic	NO (make contact)
LED status display	Yellow
Vibration resistance	10 - 55 Hz, 1 mm
Shock resistance	30 g / 11 ms
Cable length L	0,3 m

Technical data

Part No.		for	Type of contact
R412022868		PRA, PRE, CCI, KPZ, SSI, GPC, CVI	Reed
R412027172		PRA, PRE, CCI, KPZ, SSI, GPC, CVI	Reed
R412022872		PRA, PRE, CCI, KPZ, SSI, GPC, CVI	Reed
R412022858		PRA, PRE, CCI, KPZ, SSI, GPC, CVI	electronic PNP
R412022851		PRA, PRE, CCI, KPZ, SSI, GPC, CVI	electronic NPN

Part No.	Cable length L	Min./max. AC operating voltage	Voltage drop U at Imax
R412022868	0,3 m	10 ... 30 V AC	≤ 3,5 V
R412027172	0,3 m	10 ... 30 V AC	≤ 3,5 V
R412022872	0,3 m	10 ... 30 V AC	≤ 0,1 V
R412022858	0,3 m	-	≤ 2,5 V
R412022851	0,3 m	-	≤ 2,5 V

Part No.	DC switching current, max.	AC switching current, max.
R412022868	0,13 A	0,13 A
R412027172	0,13 A	0,13 A
R412022872	0,3 A	0,5 A
R412022858	0,13 A	-

Part No.	DC switching current, max.	AC switching current, max.
R412022851	0,13 A	-

Part No.	Switching capacity	Max. switching frequency
R412022868	Reed, 2-pin: max. 10 W	400 Hz
R412027172	Reed, 2-pin: max. 10 W	400 Hz
R412022872	Reed, 3-pin: max. 6 W	400 Hz
R412022858	-	1000 Hz
R412022851	-	1000 Hz

Part No.	Operating current, not switched	Operating current, switched
R412022868	-	-
R412027172	-	-
R412022872	-	-
R412022858	8 mA	30 mA
R412022851	8 mA	30 mA

Part No.	Version	
R412022868	Protected against polarity reversal	1)
R412027172	Protected against polarity reversal	1)
R412022872	Protected against polarity reversal	1)
R412022858	short circuit resistant Protected against polarity reversal	-
R412022851	short circuit resistant Protected against polarity reversal	-

1) The product of operating voltage and continuous current must not exceed the maximum switching capacity.

Technical information

Material	
Housing	Polyamide
Cable sheath	Polyurethane
Locking screw	Stainless steel

Dimensions

Dimensions

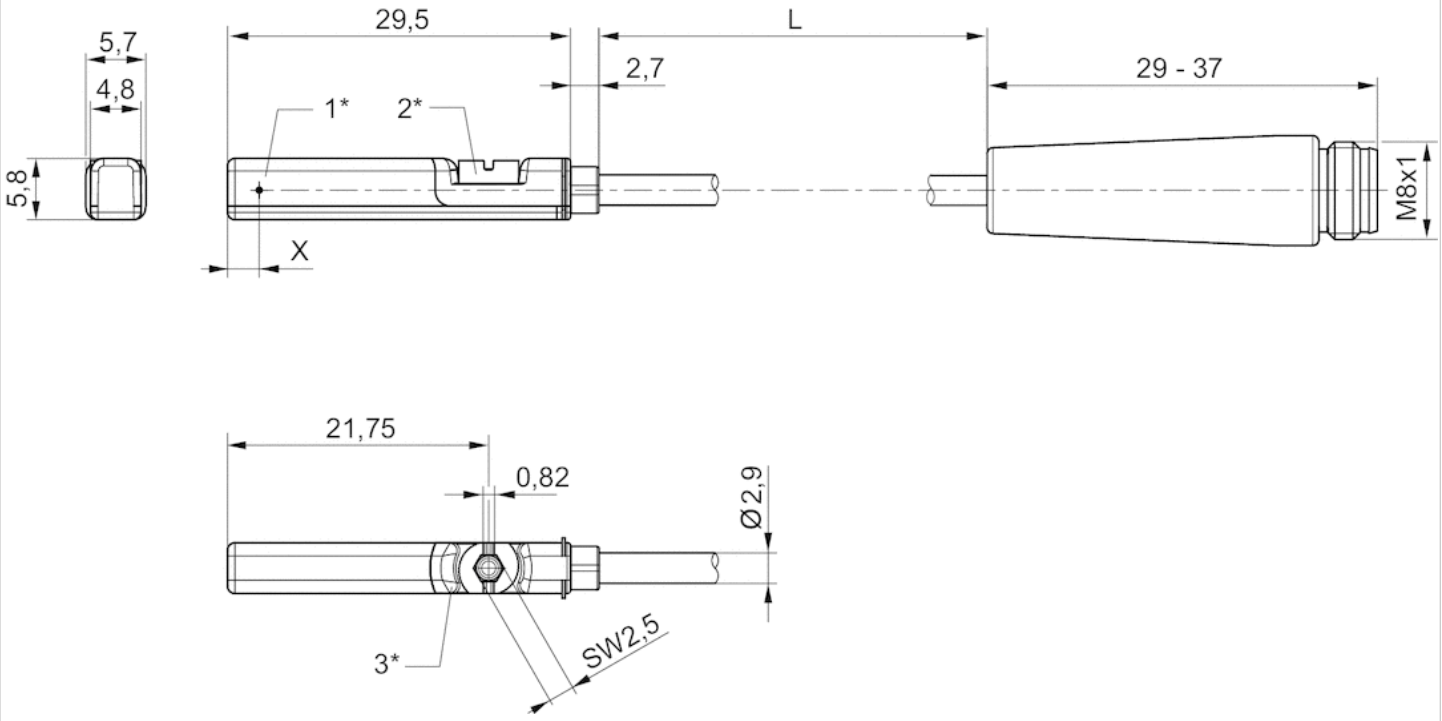

1* = switching point 2* = locking screw 3* = LED window, transparent
L = cable length
X = electronic: 11,6 mm, Reed: 8,3 mm

Sensor, Series ST6

- 6 mm T-slot
- with cable
- Plug, M12x1, 3-pin, with knurled screw
- ATEX
- UL certification, ATEX
- electronic PNP
- Direct mounting for series PRA, PRE, CCI, KPZ, SSI, GPC, CVI
- Indirect mounting for series TRB, ITS, CCL-IS, MNI, CSL-RD, RPC, ICS-D2, ICM, KHZ, TRR



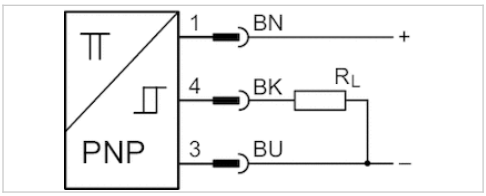

Certificates	ATEX CE declaration of conformity cULus RoHS
ATEX class G	II 3G Ex nA IIC T4 Gc X
ATEX class D	II 3D Ex tc IIIC T135°C Dc X
Ambient temperature min./max.	-20 ... 50 °C
Protection class	IP67
Switching point precision	±0,1 mT
Quiescent current (without load)	10 mA
Min./max. DC operating voltage	10 ... 30 V DC
Switching logic	NO (make contact)
LED status display	Yellow Yellow
Vibration resistance	10 - 55 Hz, 1 mm
Shock resistance	30 g / 11 ms
Cable length L	0,3 m

Technical data

Part No.	for	Type of contact	Cable length L
R412022864	PRA, PRE, CCI, KPZ, SSI, GPC, CVI	electronic PNP	0,3 m

Part No.	Voltage drop U at Imax	DC switching current, max.
R412022864	≤ 2,5 V	0,1 A

Part No.	Max. switching frequency
R412022864	1000 Hz

Part No.	Version
R412022864	short circuit resistant Protected against polarity reversal

Technical information

Material	
Housing	Polyamide
Cable sheath	Polyurethane
Locking screw	Stainless steel

Dimensions

Dimensions

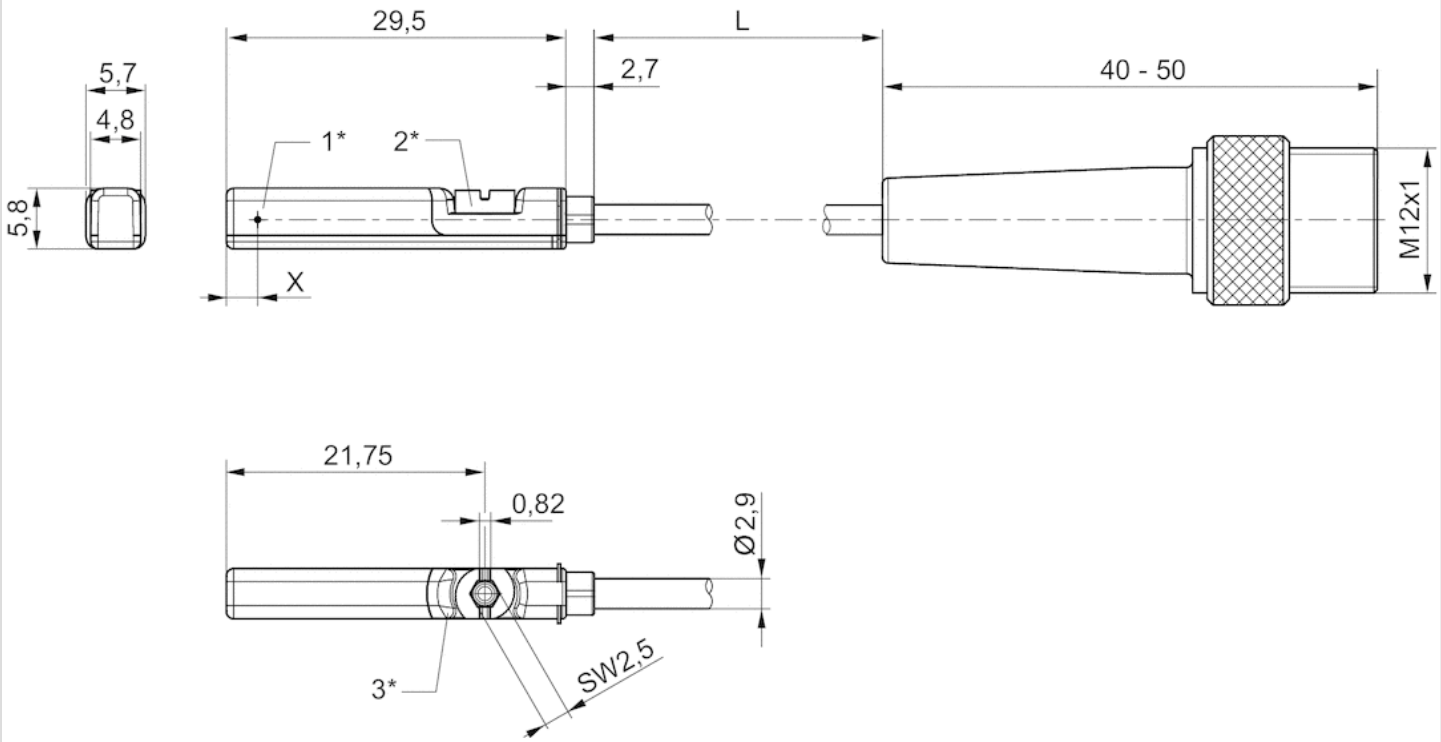

1* = switching point 2* = locking screw 3* = LED window, transparent
L = cable length
X = PNP: 11,6 mm, reed: 8,3 mm

Pin assignments

Pin assignments

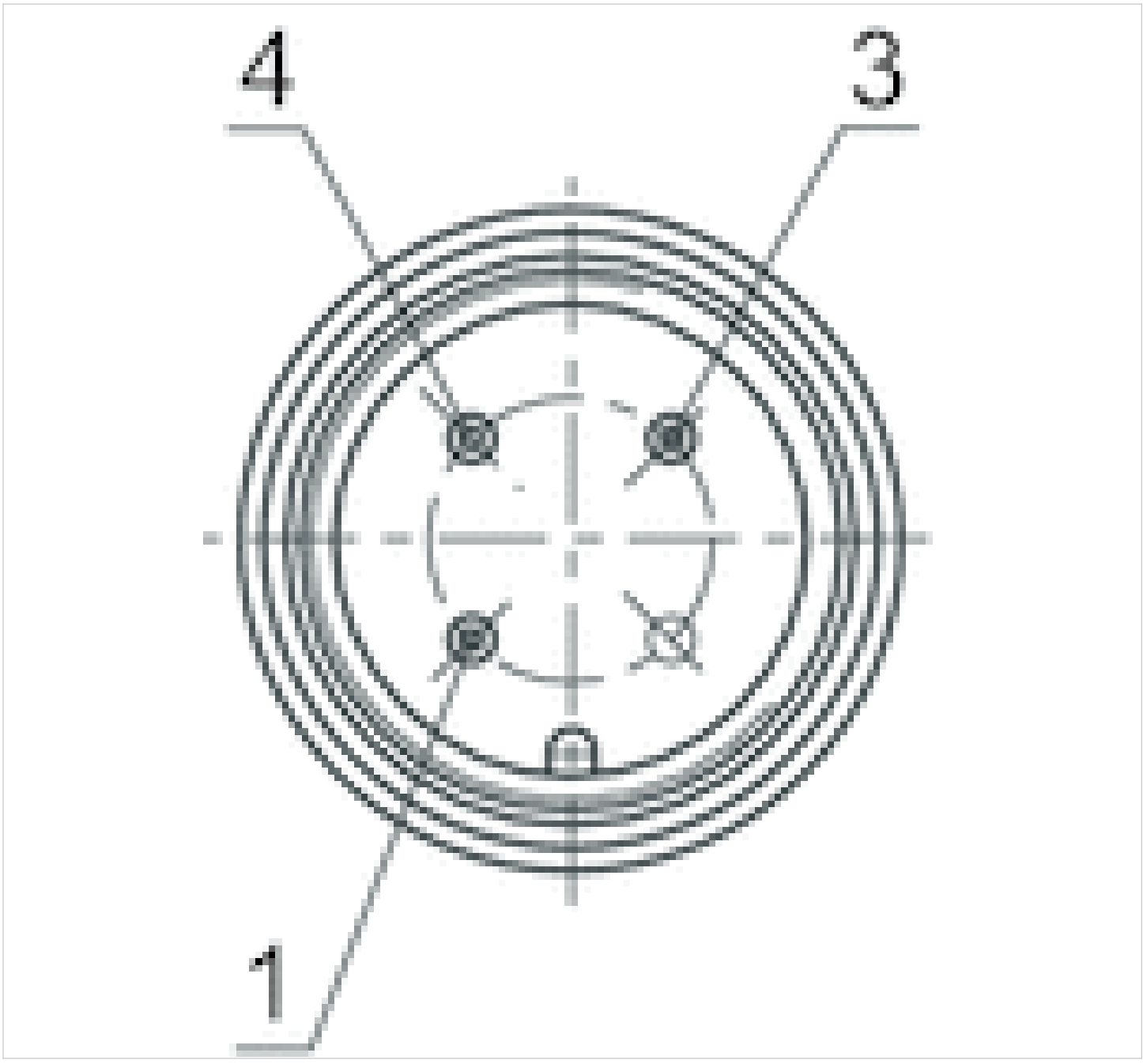

Pin	1	3	4
Allocation	(+)	(-)	(OUT)

Sensor, Series ST6

- 6 mm T-slot
- with cable
- Plug, M12x1, 2-pin, with knurled screw Plug, M12x1, 4-pin, with knurled screw
- UL certification
- Reed electronic PNP
- Direct mounting for series PRA, PRE, CCI, KPZ, SSI, GPC, CVI
- Indirect mounting for series TRB, ITS, CCL-IS, MNI, CSL-RD, RPC, ICS-D2, ICM, KHZ, TRR



Certificates	CE declaration of conformity cULus RoHS
Ambient temperature min./max.	-30 ... 80 °C
Protection class	See table below
Switching point precision	±0,1 mT
Nominal current, actuated state	30 mA
Quiescent current (without load)	8 mA
Min./max. DC operating voltage	10 ... 30 V DC
Min./max. AC operating voltage	See table below
Hysteresis	≥ 0,2 mT
Switching logic	NO (make contact)
LED status display	Yellow
Vibration resistance	10 - 55 Hz, 1 mm
Shock resistance	30 g / 11 ms
Cable length L	0,3 0,1 3 5 m

Technical data

Part No.		for	Type of contact
R412027171		PRA, PRE, CCI, KPZ, SSI, GPC, CVI	Reed
R412022876		PRA, PRE, CCI, KPZ, SSI, GPC, CVI	Reed
R412022879		PRA, PRE, CCI, KPZ, SSI, GPC, CVI	electronic PNP
R412022863		PRA, PRE, CCI, KPZ, SSI, GPC, CVI	electronic PNP
R412022877		PRA, PRE, CCI, KPZ, SSI, GPC, CVI	electronic PNP
R412022878		PRA, PRE, CCI, KPZ, SSI, GPC, CVI	electronic PNP

Part No.	Cable length L	Min./max. AC operating voltage	Voltage drop U at Imax
R412027171	0,3 m	10 ... 30 V AC	≤ 3,5 V
R412022876	0,3 m	10 ... 30 V AC	≤ 0,1 V
R412022879	0,1 m	-	≤ 2,5 V
R412022863	0,3 m	-	≤ 2,5 V
R412022877	3 m	-	≤ 2,5 V
R412022878	5 m	-	≤ 2,5 V

Part No.	DC switching current, max.	AC switching current, max.
R412027171	0,13 A	0,13 A
R412022876	0,3 A	0,5 A

Part No.	DC switching current, max.	AC switching current, max.
R412022879	0,13 A	-
R412022863	0,13 A	-
R412022877	0,13 A	-
R412022878	0,13 A	-

Part No.	Switching capacity	Max. switching frequency
R412027171	Reed, 2-pin: max. 10 W	400 Hz
R412022876	Reed, 3-pin: max. 6 W	400 Hz
R412022879	-	1000 Hz
R412022863	-	1000 Hz
R412022877	-	1000 Hz
R412022878	-	1000 Hz

Part No.	Operating current, not switched	Operating current, switched	Protection class
R412027171	-	-	IP65 IP67
R412022876	-	-	IP65 IP67
R412022879	8 mA	30 mA	IP65 IP67
R412022863	8 mA	30 mA	IP65 IP67 IP69K
R412022877	8 mA	30 mA	IP65 IP67
R412022878	8 mA	30 mA	IP65 IP67

Part No.	Version	
R412027171	Protected against polarity reversal	1)
R412022876	Protected against polarity reversal	1)
R412022879	short circuit resistant Protected against polarity reversal	-
R412022863	short circuit resistant Protected against polarity reversal	-
R412022877	short circuit resistant Protected against polarity reversal	-
R412022878	short circuit resistant Protected against polarity reversal	-

1) The product of operating voltage and continuous current must not exceed the maximum switching capacity.

Technical information

Material	
Housing	Polyamide
Cable sheath	Polyurethane
Locking screw	Stainless steel

Dimensions

Dimensions

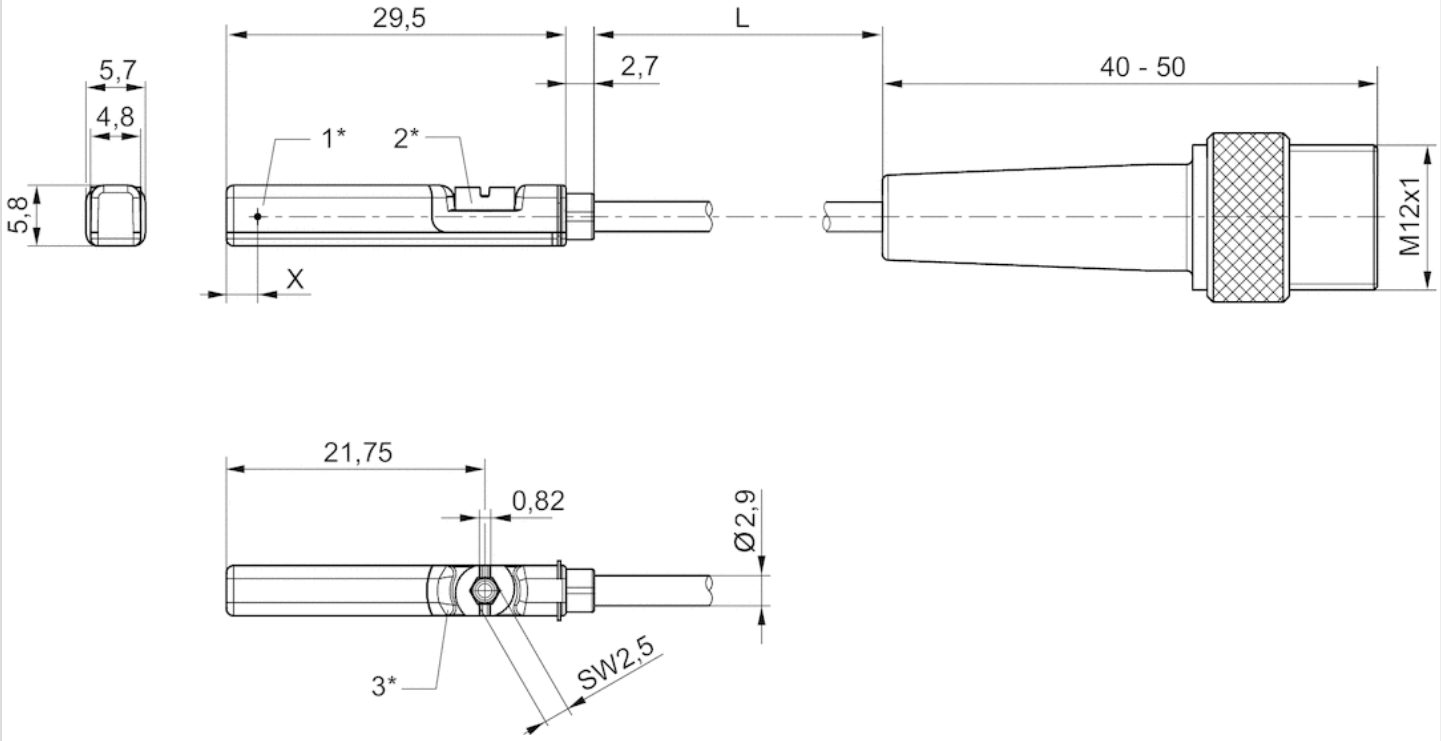

1* = switching point 2* = locking screw 3* = LED window, transparent
L = cable length
X = PNP: 11,6 mm, reed: 8,3 mm

Sensor, Series ST6

- 6 mm T-slot
- with cable
- Plug, M8x1, 3-pin, with knurled screw
- ATEX
- UL certification, ATEX
- electronic PNP
- Direct mounting for series PRA, PRE, CCI, KPZ, SSI, GPC, CVI
- Indirect mounting for series TRB, ITS, CCL-IS, MNI, CSL-RD, RPC, ICS-D2, ICM, KHZ, TRR



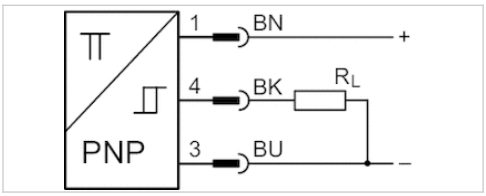

Certificates	ATEX CE declaration of conformity cULus RoHS
ATEX class G	II 3G Ex nA IIC T4 Gc X
ATEX class D	II 3D Ex tc IIIC T135°C Dc X
Ambient temperature min./max.	-20 ... 50 °C
Protection class	IP65 IP67
Switching point precision	±0,1 mT
Quiescent current (without load)	10 mA
Min./max. DC operating voltage	10 ... 30 V DC
Switching logic	NO (make contact)
LED status display	Yellow Yellow
Vibration resistance	10 - 55 Hz, 1 mm
Shock resistance	30 g / 11 ms
Cable length L	0,3 m

Technical data

Part No.	for	Type of contact	Cable length L
R412022860	PRA, PRE, CCI, KPZ, SSI, GPC, CVI	electronic PNP	0,3 m

Part No.	Voltage drop U at Imax	DC switching current, max.
R412022860	≤ 2,5 V	0,1 A

Part No.	Max. switching frequency
R412022860	1000 Hz

Part No.	Version
R412022860	short circuit resistant Protected against polarity reversal

Technical information

Material	
Housing	Polyamide
Cable sheath	Polyurethane
Locking screw	Stainless steel

Dimensions

Dimensions

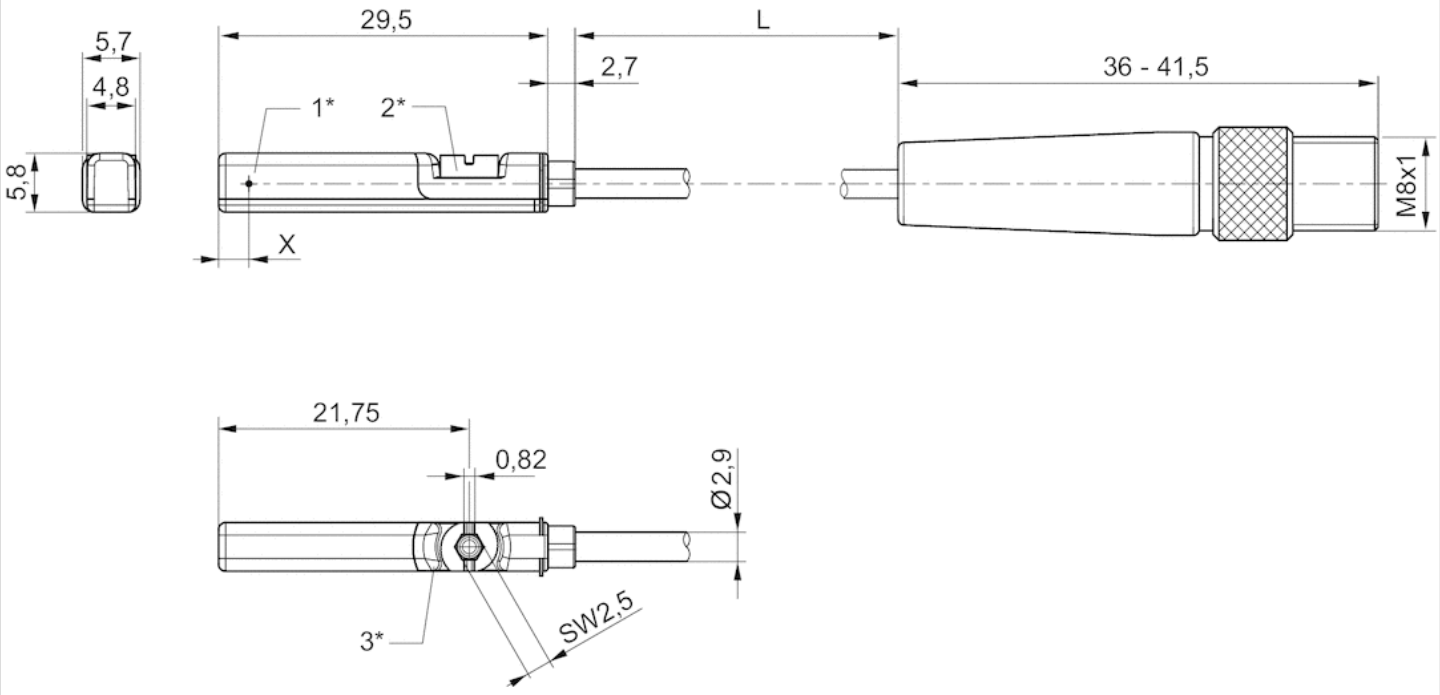

1* = switching point 2* = locking screw 3* = LED window, transparent
L = cable length
X = electronic: 11,6 mm, Reed: 8,3 mm

Pin assignments

Pin assignments

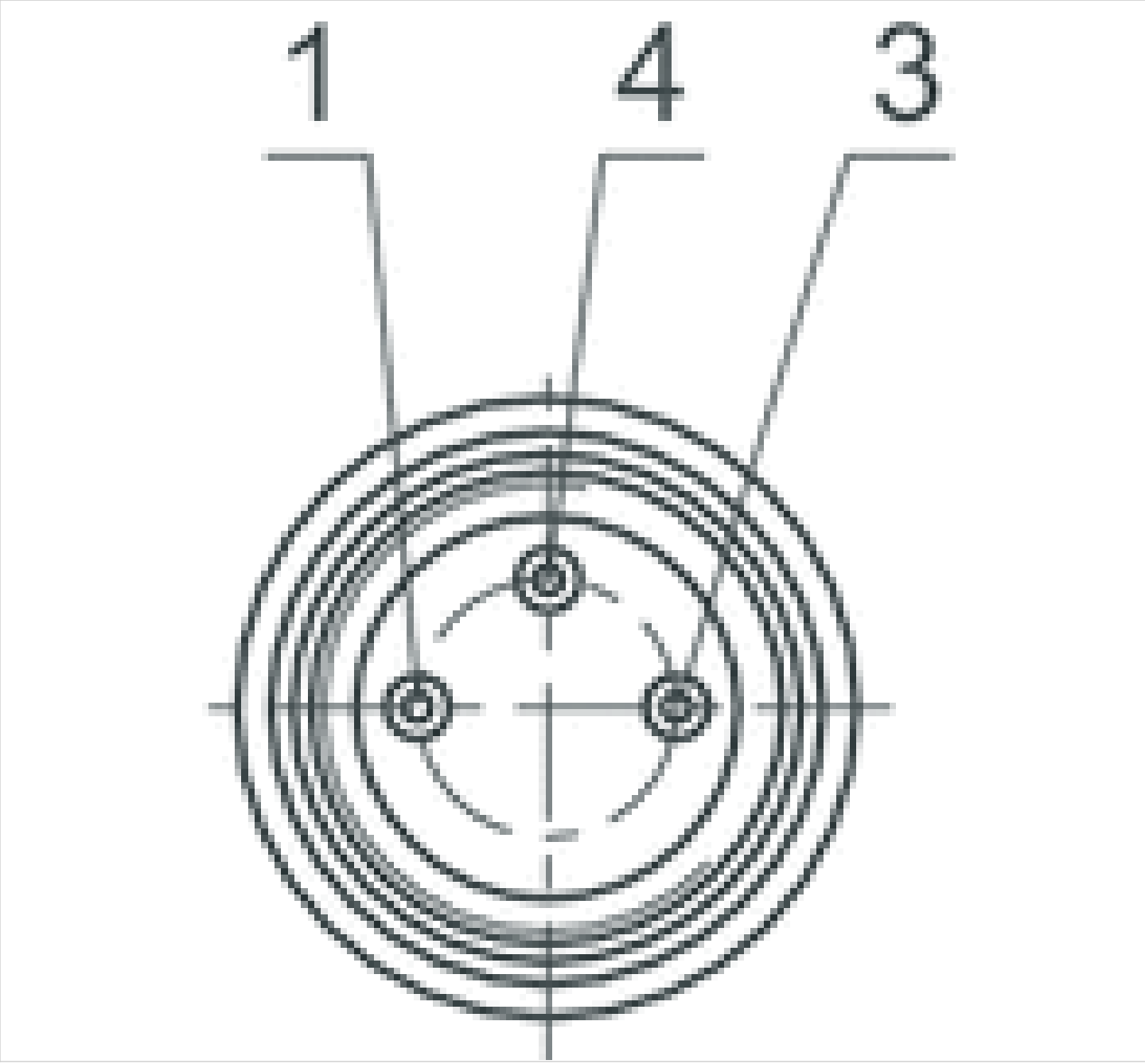

Pin	1	3	4
Allocation	(+)	(-)	(OUT)

Sensor, Series ST6

- 6 mm T-slot
- with cable
- Plug, M8x1, 3-pin, with knurled screw
- UL certification
- Reed electronic PNP electronic NPN
- Direct mounting for series PRA, PRE, CCI, KPZ, SSI, GPC, CVI
- Indirect mounting for series TRB, ITS, CCL-IS, MNI, CSL-RD, RPC, ICS-D2, ICM, KHZ, TRR



Certificates	CE declaration of conformity cULus RoHS
Ambient temperature min./max.	-30 ... 80 °C
Protection class	IP65 IP67
Switching point precision	±0,1 mT
Nominal current, actuated state	30 mA
Quiescent current (without load)	8 mA
Min./max. DC operating voltage	10 ... 30 V DC
Min./max. AC operating voltage	See table below
Hysteresis	≥ 0,2 mT
Switching logic	NO (make contact)
Switching capacity	Reed, 3-pin: max. 6 W
LED status display	Yellow
Vibration resistance	10 - 55 Hz, 1 mm
Shock resistance	30 g / 11 ms
Cable length L	0,3 0,5 m

Technical data

Part No.		for	Type of contact
R412022873		PRA, PRE, CCI, KPZ, SSI, GPC, CVI	Reed
R412022875		PRA, PRE, CCI, KPZ, SSI, GPC, CVI	Reed
R412022874		PRA, PRE, CCI, KPZ, SSI, GPC, CVI	Reed
R412022859		PRA, PRE, CCI, KPZ, SSI, GPC, CVI	electronic PNP
R412022862		PRA, PRE, CCI, KPZ, SSI, GPC, CVI	electronic PNP
R412022861		PRA, PRE, CCI, KPZ, SSI, GPC, CVI	electronic PNP
R412022852		PRA, PRE, CCI, KPZ, SSI, GPC, CVI	electronic NPN

Part No.	Cable sheath	Cable length L	Min./max. AC operating voltage
R412022873	Polyurethane	0,3 m	10 ... 30 V AC
R412022875	Polyvinyl chloride	0,3 m	10 ... 30 V AC
R412022874	Polyurethane	0,5 m	10 ... 30 V AC
R412022859	Polyurethane	0,3 m	-
R412022862	Polyvinyl chloride	0,3 m	-
R412022861	Polyurethane	0,5 m	-
R412022852	Polyurethane	0,3 m	-

Part No.	Voltage drop U at Imax	DC switching current, max.
R412022873	I*Rs	0,3 A
R412022875	I*Rs	0,3 A
R412022874	I*Rs	0,3 A
R412022859	≤ 2,5 V	0,13 A
R412022862	≤ 2,5 V	0,13 A
R412022861	≤ 2,5 V	0,13 A
R412022852	≤ 2,5 V	0,13 A

Part No.	AC switching current, max.	Max. switching frequency
R412022873	0,5 A	400 Hz
R412022875	0,5 A	400 Hz
R412022874	0,5 A	400 Hz
R412022859	-	1000 Hz
R412022862	-	1000 Hz
R412022861	-	1000 Hz
R412022852	-	1000 Hz

Part No.	Operating current, not switched	Operating current, switched
R412022873	-	-
R412022875	-	-
R412022874	-	-
R412022859	8 mA	30 mA
R412022862	8 mA	30 mA
R412022861	8 mA	30 mA
R412022852	8 mA	30 mA

Part No.	Version
R412022873	Protected against polarity reversal
R412022875	Protected against polarity reversal
R412022874	Protected against polarity reversal
R412022859	short circuit resistant Protected against polarity reversal
R412022862	short circuit resistant Protected against polarity reversal
R412022861	short circuit resistant Protected against polarity reversal
R412022852	short circuit resistant Protected against polarity reversal

Technical information

Material	
Housing	Polyamide
Cable sheath	Polyurethane Polyvinyl chloride
Locking screw	Stainless steel

Dimensions

Dimensions

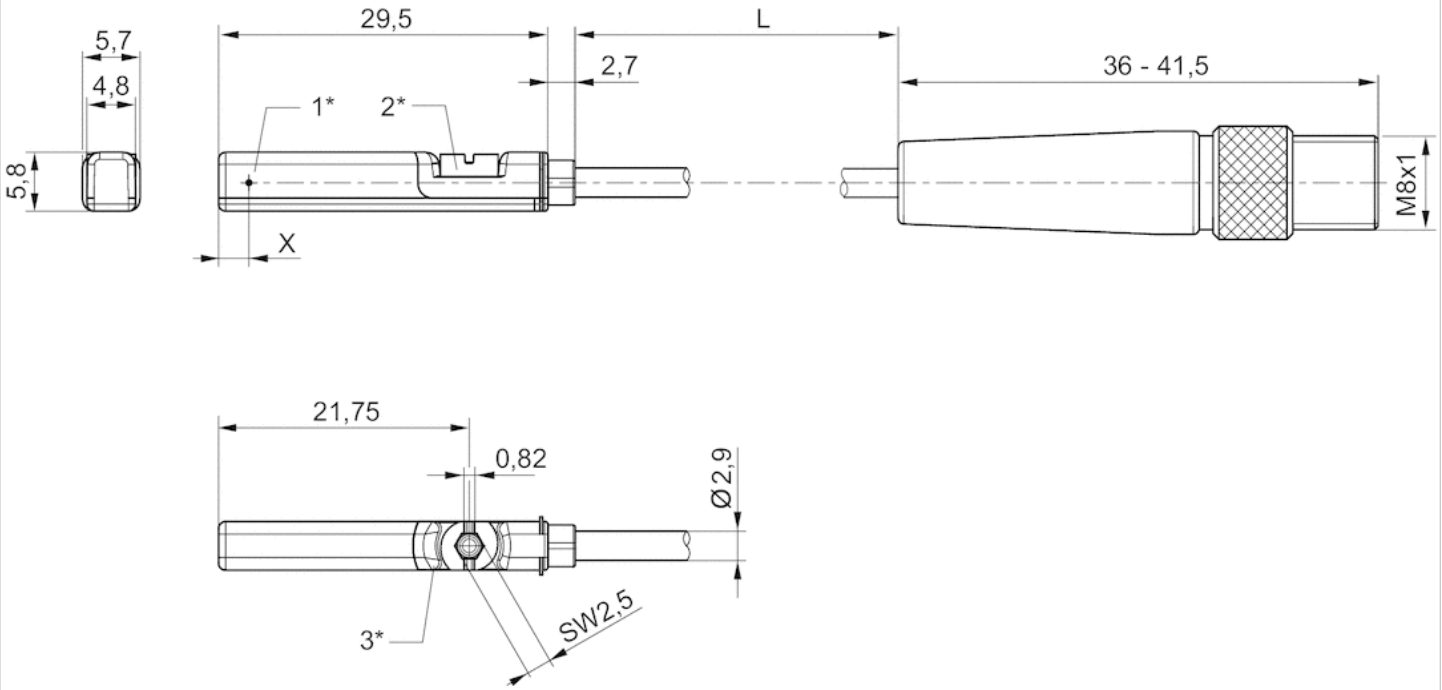

1* = switching point 2* = locking screw 3* = LED window, transparent
L = cable length
X = electronic: 11,6 mm, Reed: 8,3 mm

Pin assignments

Pin assignments

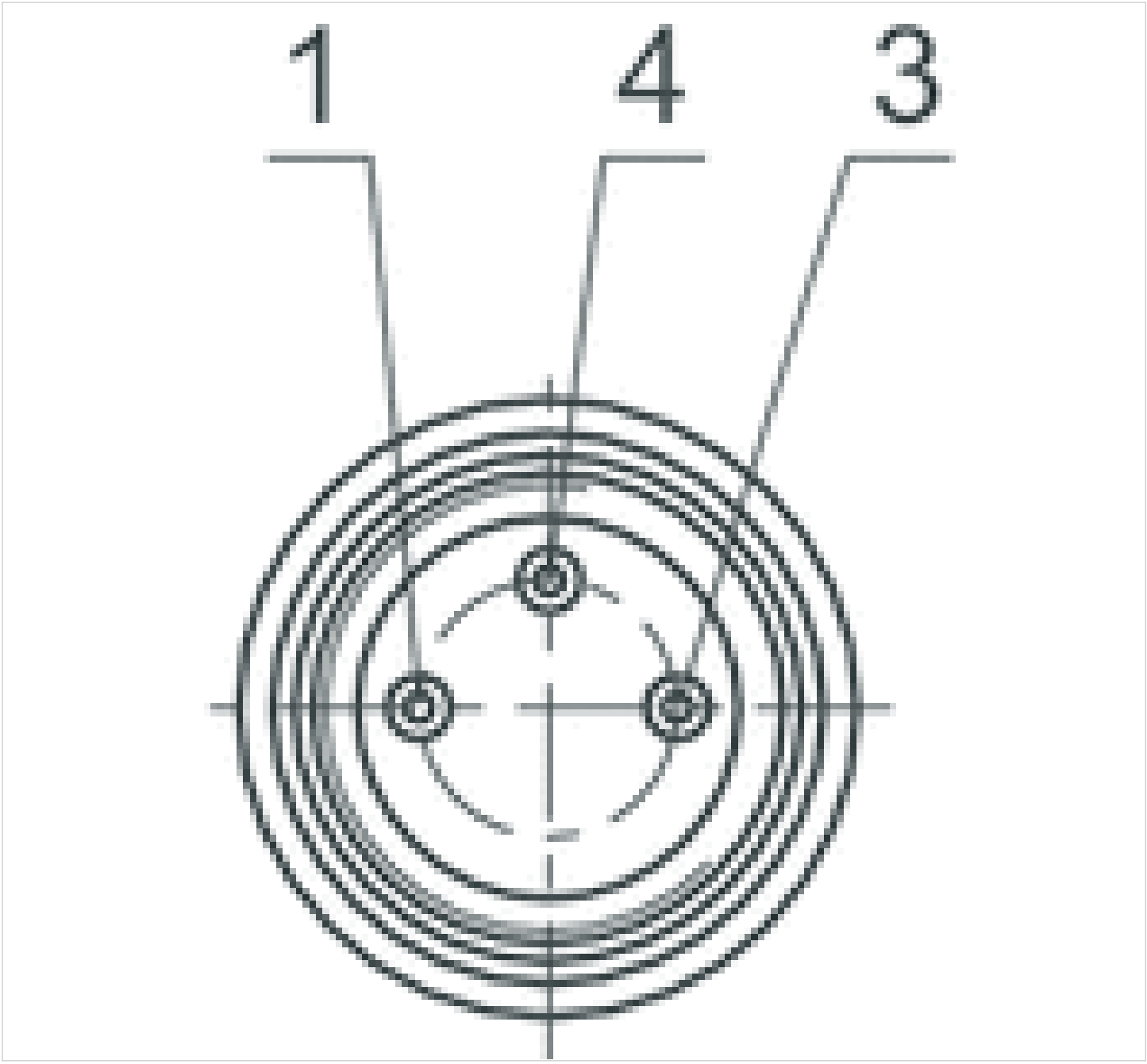

Pin	1	3	4
Allocation	(+)	(-)	(OUT)

Sensor mounting, Series CB1

- for series ST6
- to mount on cylinder CCL-IS



Weight 0,006 kg

Technical data

Part No.	for series
R402000040	ST6

Scope of delivery: incl. threaded pin

Technical information

Material	
	Aluminum

Dimensions

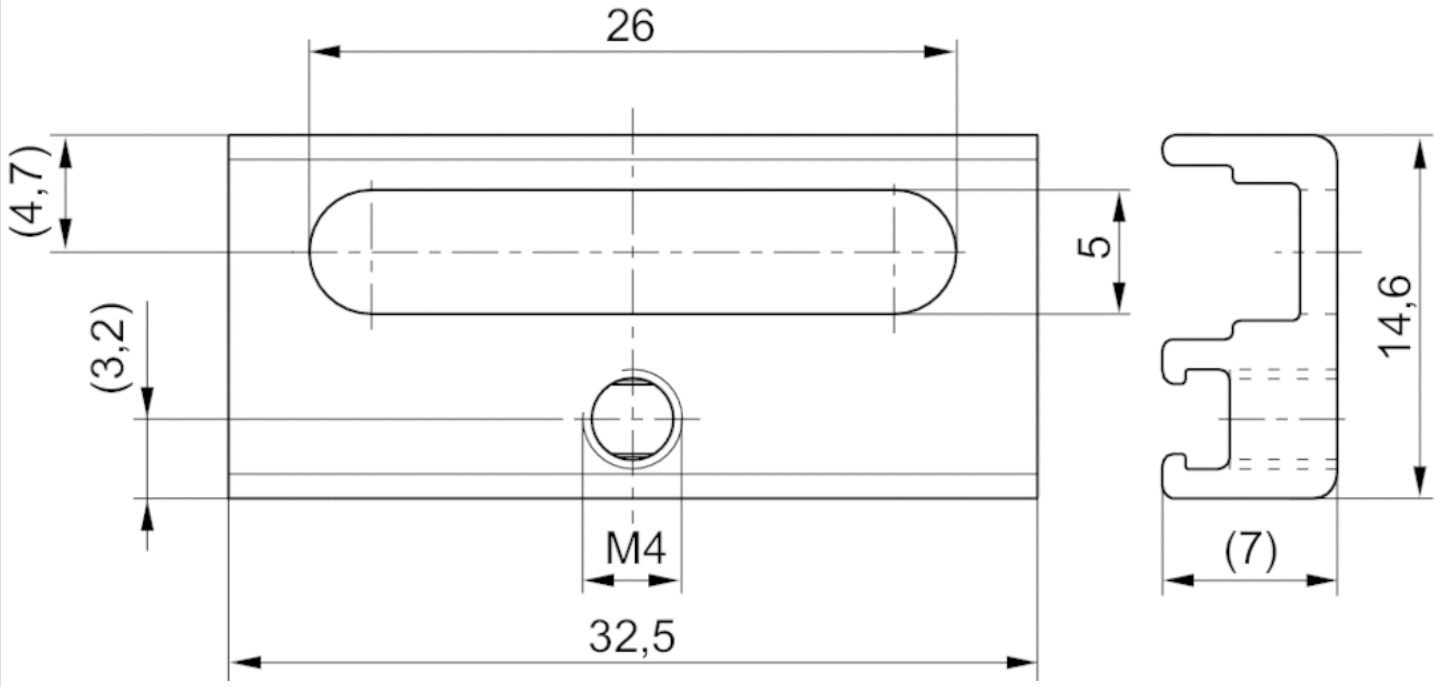

Sensor, Series ST6-HT

- 6 mm T-slot
- with cable
- open cable ends, 2-pin
- Heat resistant
- UL certification
- Reed
- Direct mounting for series PRA, PRE, CCI, KPZ
- Indirect mounting for series TRB, ITS, MNI, CSL-RD, RPC



Certificates	CE declaration of conformity RoHS
Ambient temperature min./max.	-20 ... 120 °C
Protection class	IP65 IP67
Switching point precision	±0,1 mT
Min./max. DC operating voltage	0 ... 30 V DC
Min./max. AC operating voltage	0 ... 30 V AC
Switching logic	NO (make contact)
Switching capacity	Reed, 2-pin: max. 10 W
Vibration resistance	10 - 55 Hz, 1 mm
Shock resistance	30 g / 11 ms
Cable length L	3 10 m

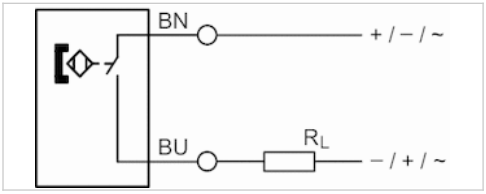

Technical data

Part No.	for	Type of contact	Cable length L	Voltage drop U at Imax
R412022865	PRA, PRE, CCI, KPZ	Reed	3 m	≤ 3,5 V
R412022867	PRA, PRE, CCI, KPZ	Reed	10 m	≤ 3,5 V

Part No.	DC switching current, max.	AC switching current, max.
R412022865	0,13 A	0,13 A
R412022867	0,13 A	0,13 A

Part No.	Max. switching frequency	Version
R412022865	400 Hz	Protected against polarity reversal
R412022867	400 Hz	Protected against polarity reversal

Part No.	Temperature resistance
R412022865	Heat resistant

Part No.	Temperature resistance
R412022867	Heat resistant

Technical information

Material	
Housing	Polyamide
Cable sheath	Polyurethane
Locking screw	Stainless steel

Dimensions

Dimensions

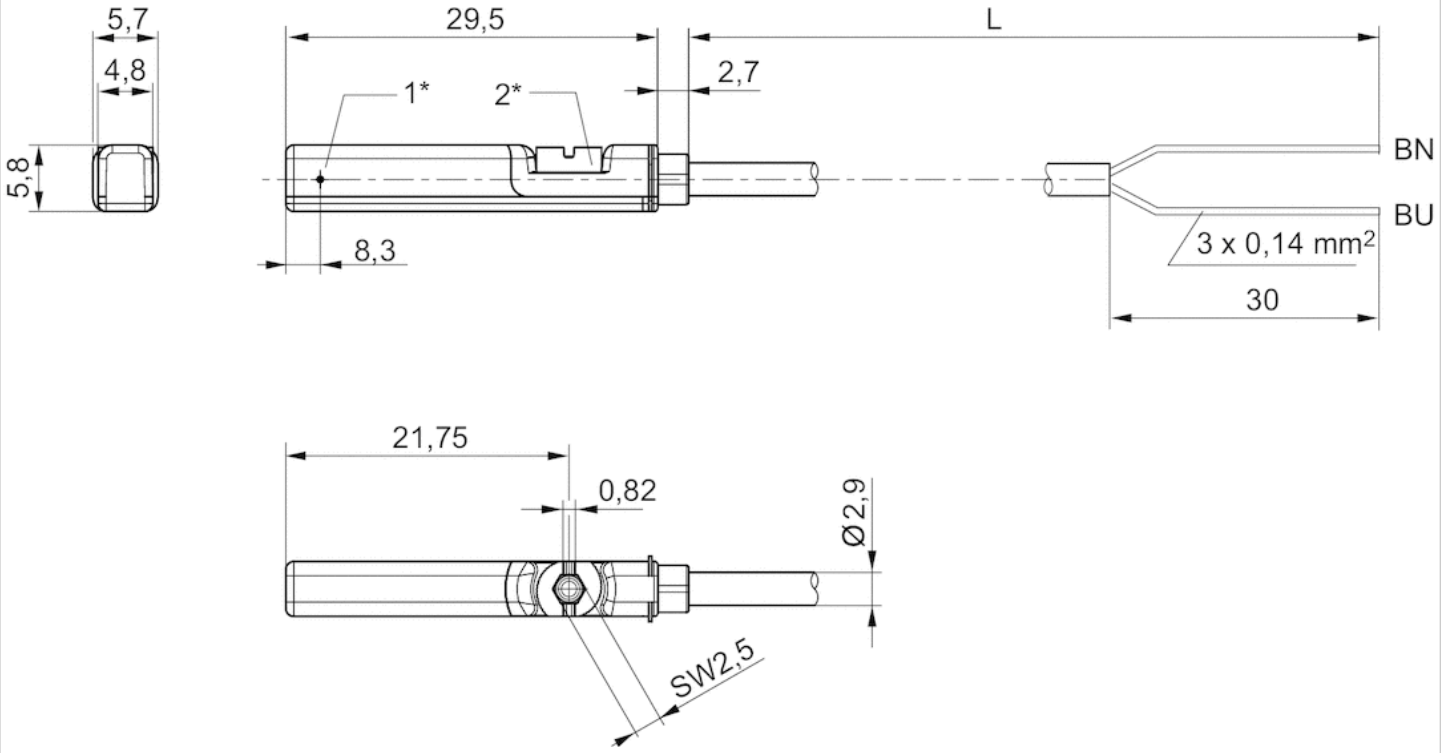

1* = switching point 2* = locking screw
L = cable length
BN=brown, BU=blue

Round plug connector, Series CON-RD

- Socket, M8x1, 3-pin, A-coded, straight, 180°
- UL (Underwriters Laboratories)
- unshielded



Connection type	Soldering
Ambient temperature min./max.	-25 ... 80 °C
Operational voltage	48 V AC/DC
Protection class	IP67
Weight	0,009 kg

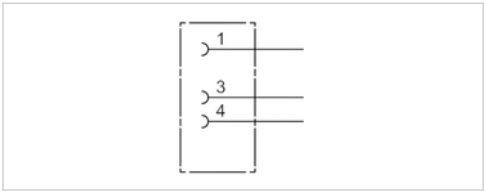

Technical data

Part No.	Max. current	suitable cable-Ø min./max
1834484173	4 A	3,5 / 5 mm

Technical information

The specified protection class is only valid in assembled and tested state.

Technical information

Material	
Housing	Polyamide

Dimensions

Dimensions

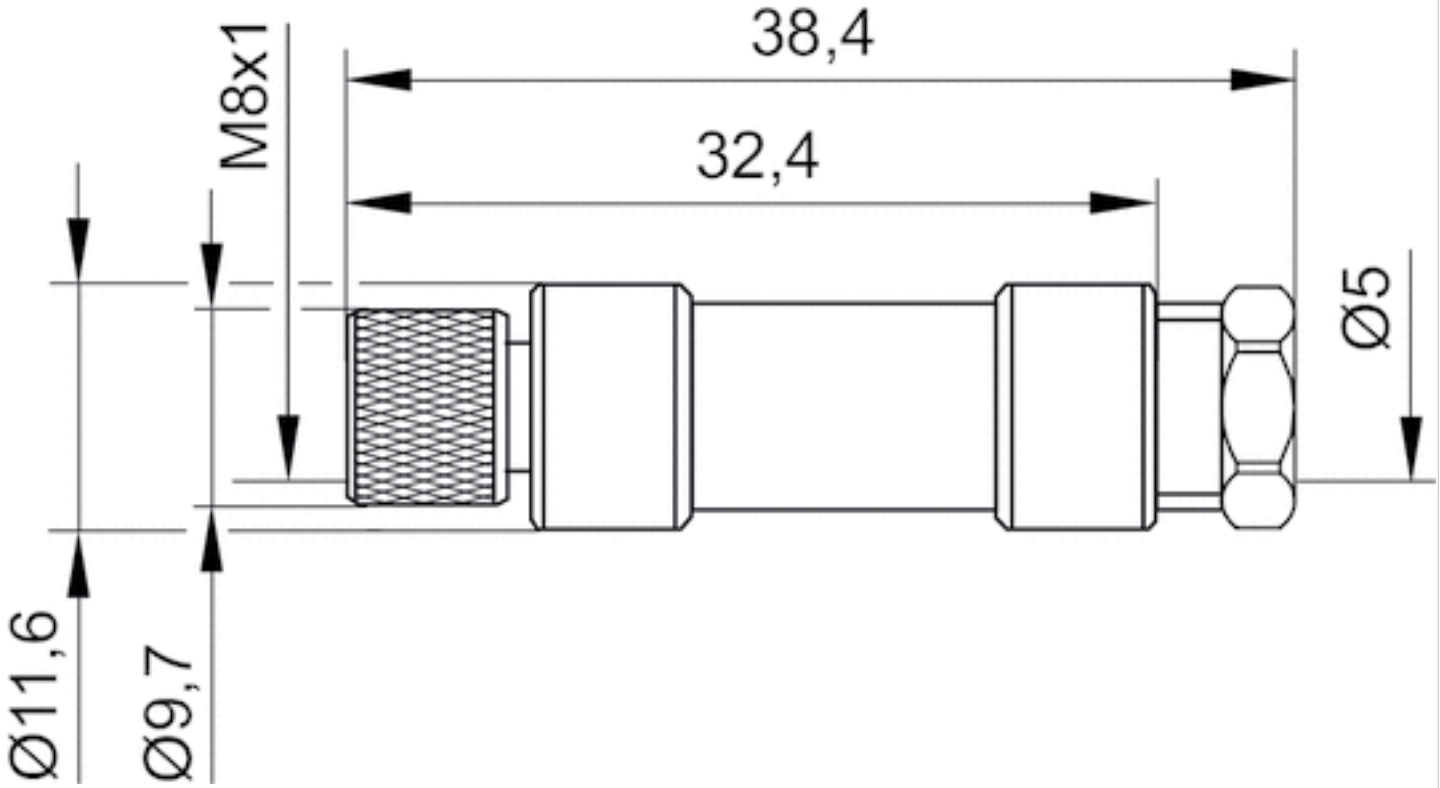

Pin assignments

Pin assignment, socket

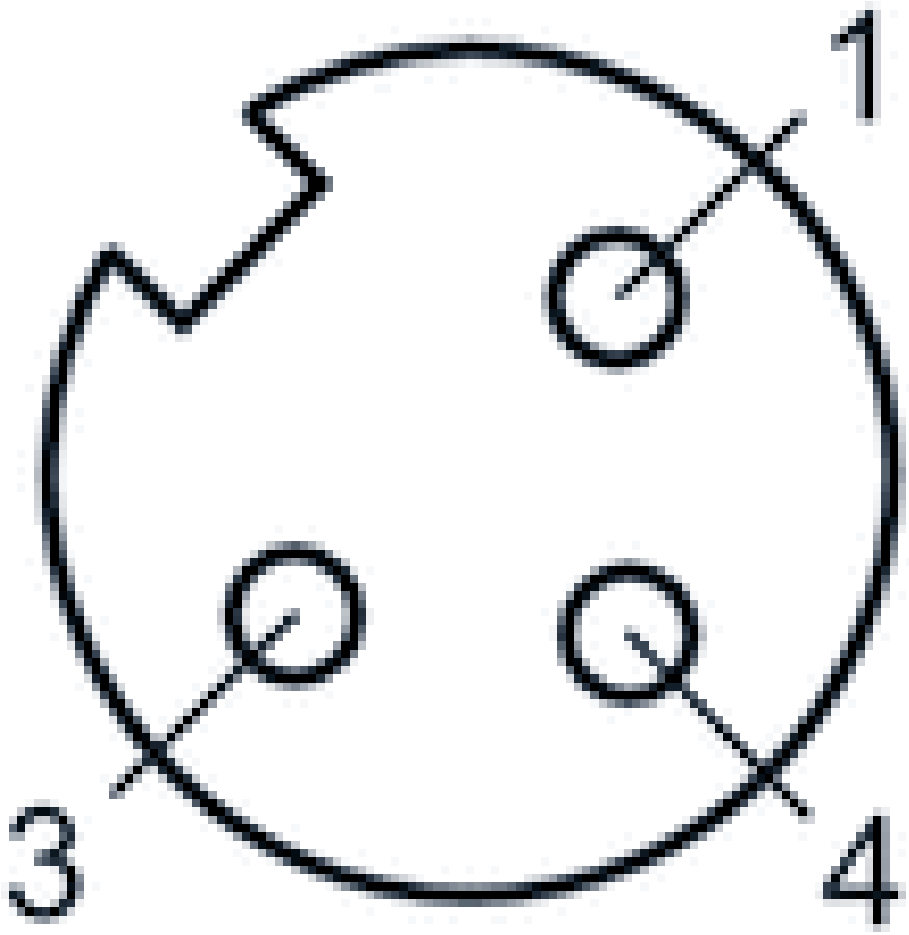

Round plug connector, Series CON-RD

- Socket, M8x1, 3-pin, A-coded, angled, 90°
- UL (Underwriters Laboratories)
- unshielded



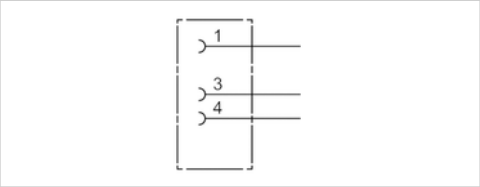

Connection type	Soldering
Ambient temperature min./max.	-40 ... 85 °C
Operational voltage	48 V AC/DC
Protection class	IP67
Weight	0,01 kg

Technical data

Part No.	Max. current	Contact assignment	suitable cable-Ø min./max
1834484174	4 A	3	3,5 / 5 mm

Technical information

The specified protection class is only valid in assembled and tested state.

Technical information

Material	
Housing	Polyamide

Dimensions

Dimensions

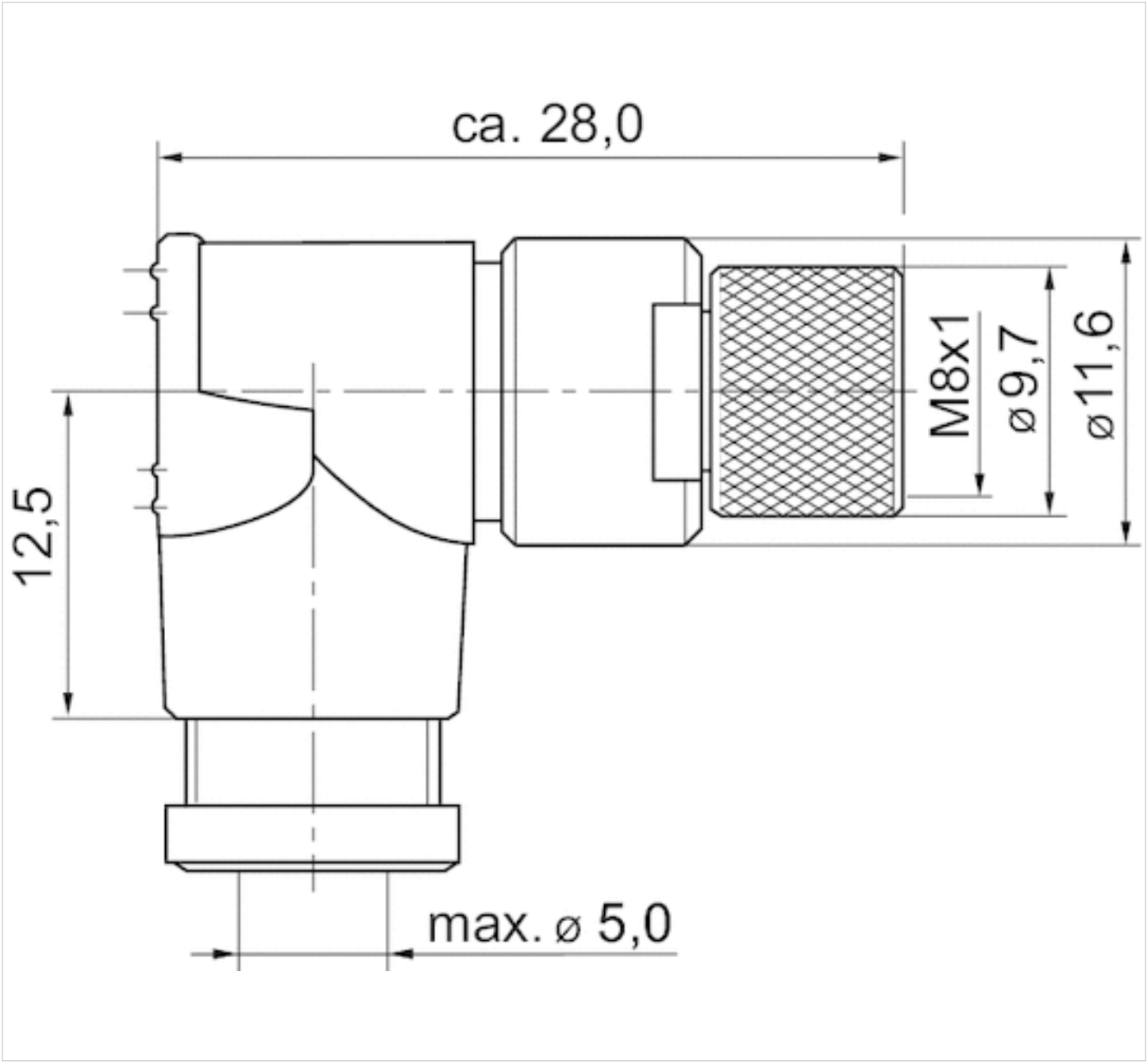

Pin assignments

Pin assignment, socket

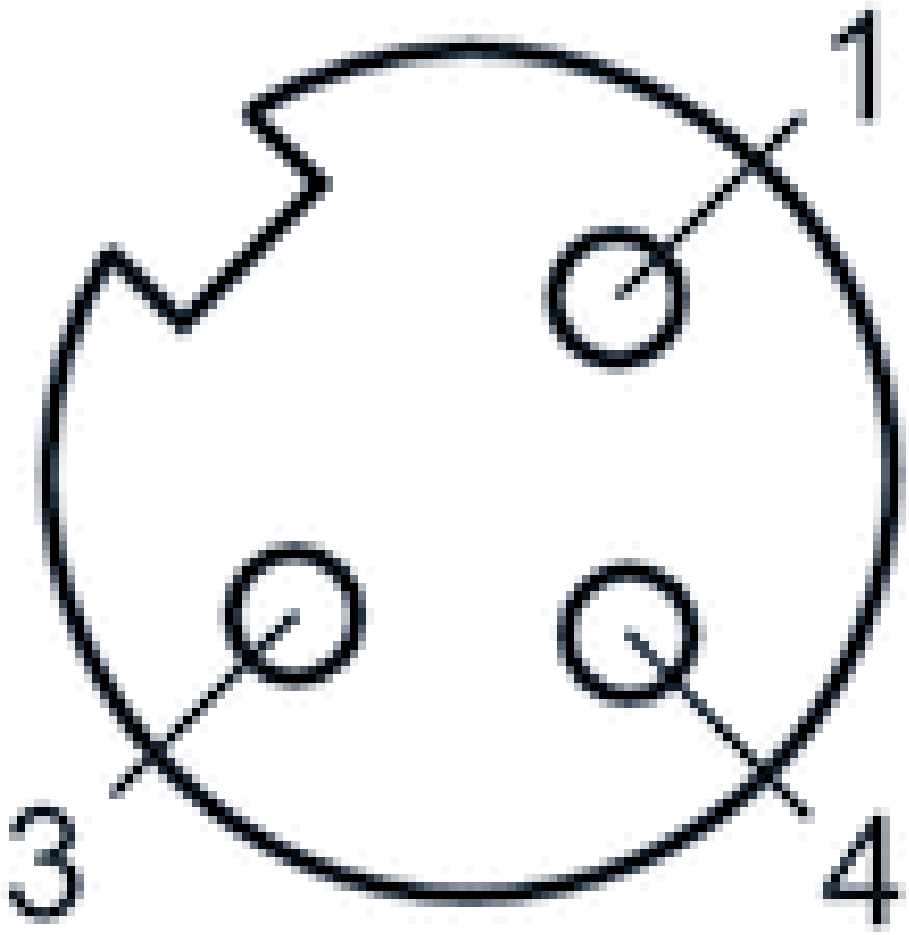

Round plug connector, Series CON-RD

- Socket M8x1 3-pin A-coded straight 180°
- open cable ends
- with cable
- UL (Underwriters Laboratories)
- unshielded



Ambient temperature min./max.	-25 ... 85 °C
Operational voltage	48 V AC/DC
Protection class	IP67
Wire cross-section	0,24 mm²
Weight	See table below

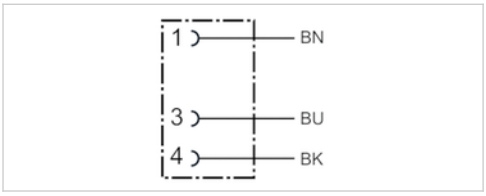

Technical data

Part No.	Max. current	Number of wires	Cable-Ø	Cable length	Certification	Weight
1834484166	4 A	3	4,5 mm	3 m	UL (Underwriters Laboratories)	0,087 kg
1834484168	4 A	3	4,5 mm	5 m	UL (Underwriters Laboratories)	0,141 kg
1834484247	4 A	3	4,5 mm	10 m	UL (Underwriters Laboratories)	0,277 kg

Technical information

The specified protection class is only valid in assembled and tested state.

Technical information

Material	
Housing	Polyurethane
Cable sheath	Polyurethane

Dimensions

Dimensions

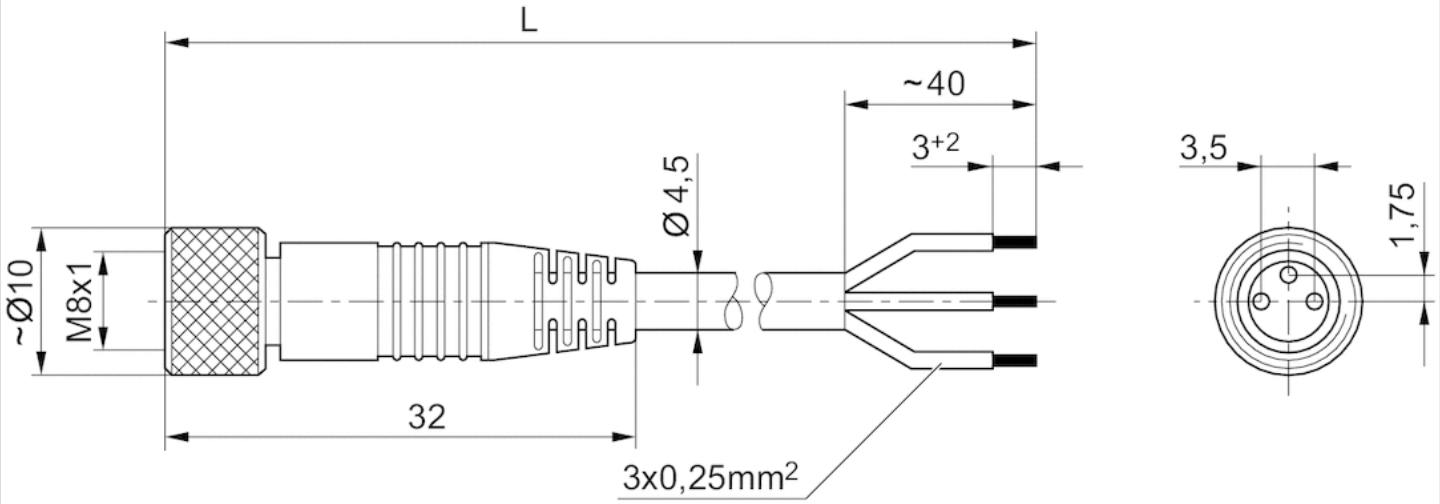

L = length

Pin assignments

Pin assignment, socket

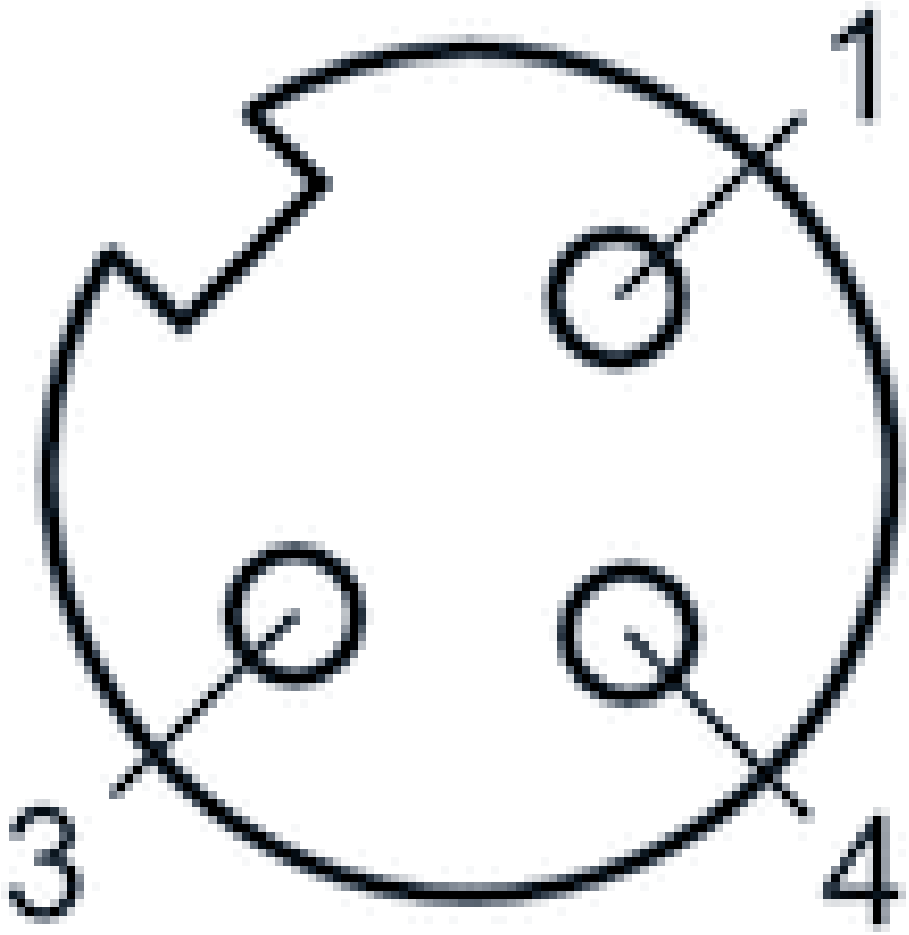

(1) BN=brown
(3) BU=blue
(4) BK=black

Round plug connector, Series CON-RD

- Socket M8x1 3-pin A-coded angled 90°
- open cable ends
- with cable
- unshielded



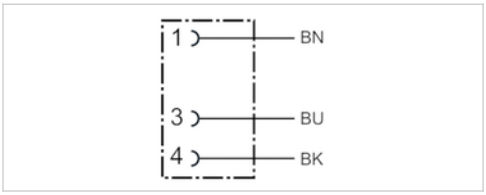

Ambient temperature min./max.	-40 ... 85 °C
Operational voltage	48 V AC/DC
Protection class	IP67
Wire cross-section	0,24 mm²
Weight	See table below

Technical data

Part No.	Max. current	Number of wires	Cable-Ø	Cable length	Weight
1834484167	4 A	3	4,5 mm	3 m	0,087 kg
1834484169	4 A	3	4,5 mm	5 m	0,139 kg
1834484248	4 A	3	4,5 mm	10 m	0,279 kg

Technical information

The specified protection class is only valid in assembled and tested state.

Technical information

Material	
Housing	Polyurethane
Cable sheath	Polyurethane

Dimensions

Dimensions

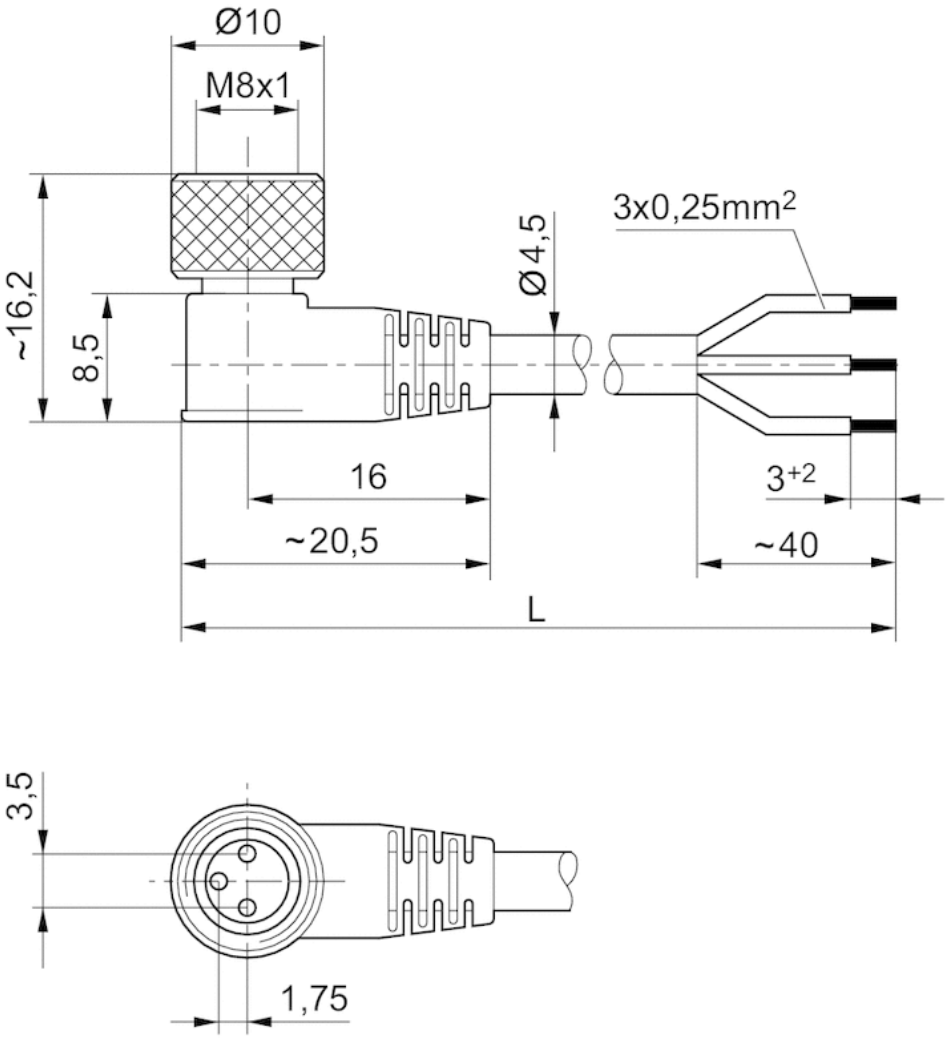

L = length

Pin assignments

Pin assignment, socket

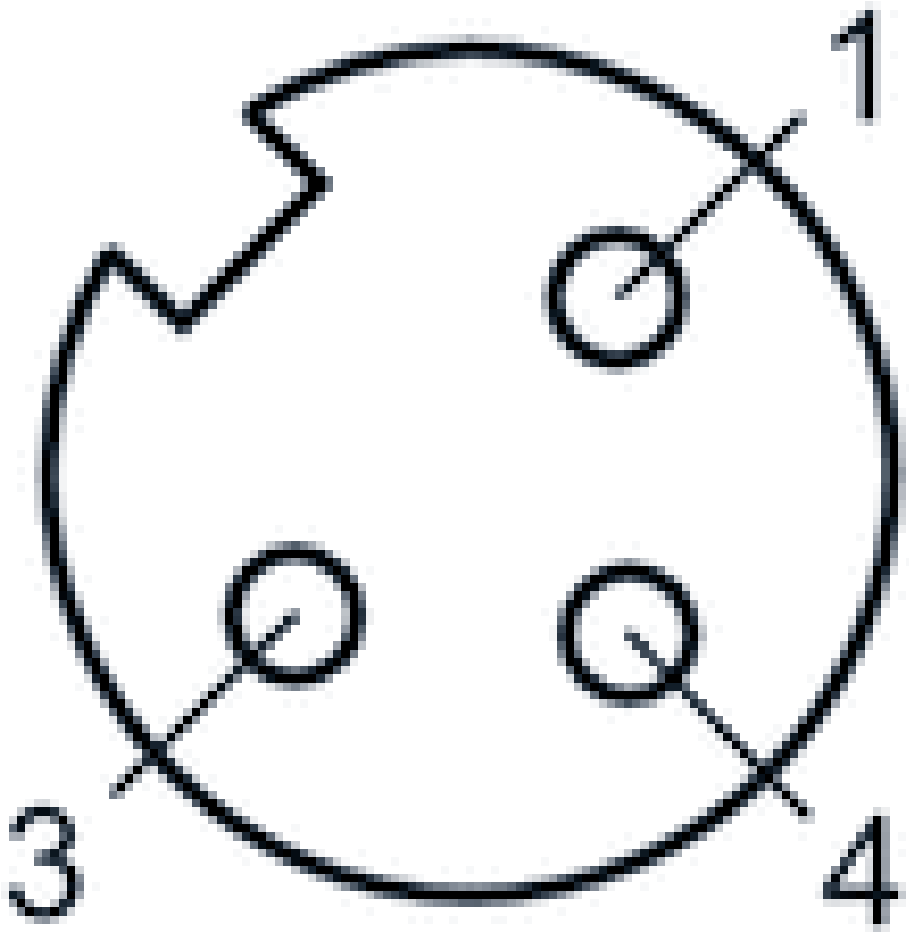

(1) BN=brown
(3) BU=blue
(4) BK=black

Silencers, series SI1

- M5 G 1/8
- Stainless steel



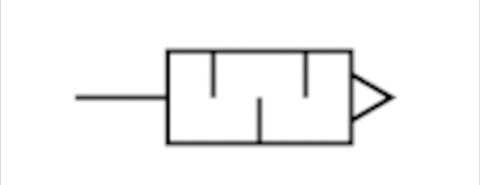

Working pressure min./max.	0 ... 12 bar
Ambient temperature min./max.	-20 ... 150 °C
Medium	Compressed air
Sound pressure level	See table below
Weight	See table below
Comment	Flow characteristic curves can be found under “Diagrams”.

Technical data

Part No.	Compressed air connection	Sound pressure level	Flow	Delivery unit	Weight	
			Qn			
R412010686	M5	68 dB	-	10 piece	0,006 kg	-
R412010687	G 1/8	73 dB	1218 l/min	10 piece	0,01 kg	1)

Weight per piece

1) Nominal flow Qn at p1 = 6 bar (absolute) freely discharged. Sound pressure level measured at 6 bar against atmosphere at 1 m distance.

Technical information

Material	
Silencer	Stainless steel
Thread	Stainless steel

Dimensions

Dimensions

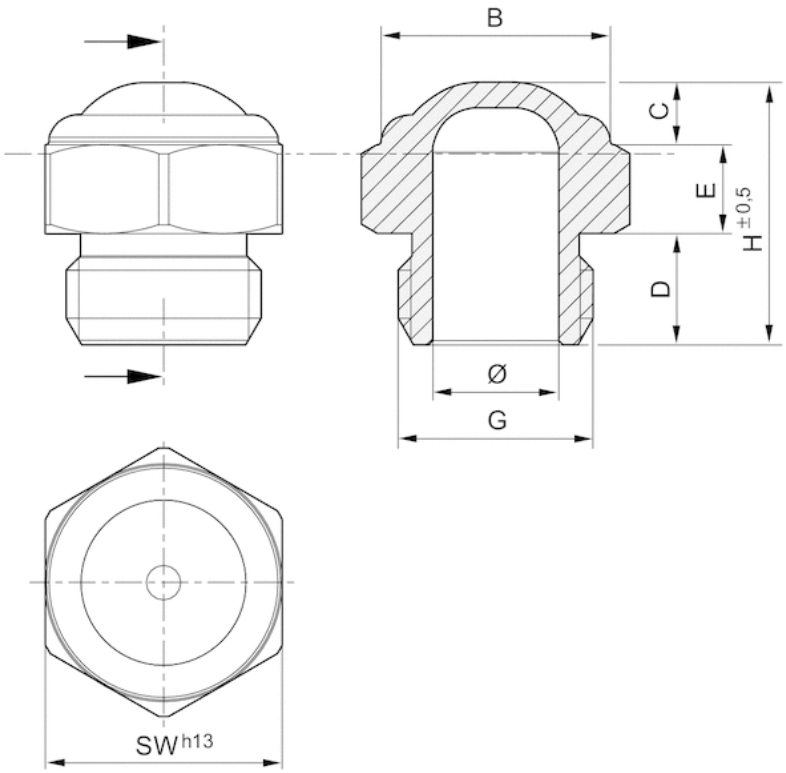

Dimensions

Part No.	Port G	Ø	B	D	E	H	SW
R412010686	M5	2.5	6.5	4	3	8	8
R412010687	G 1/8	6	11	6	4	15	13

Diagrams

Flow diagram, R412010687

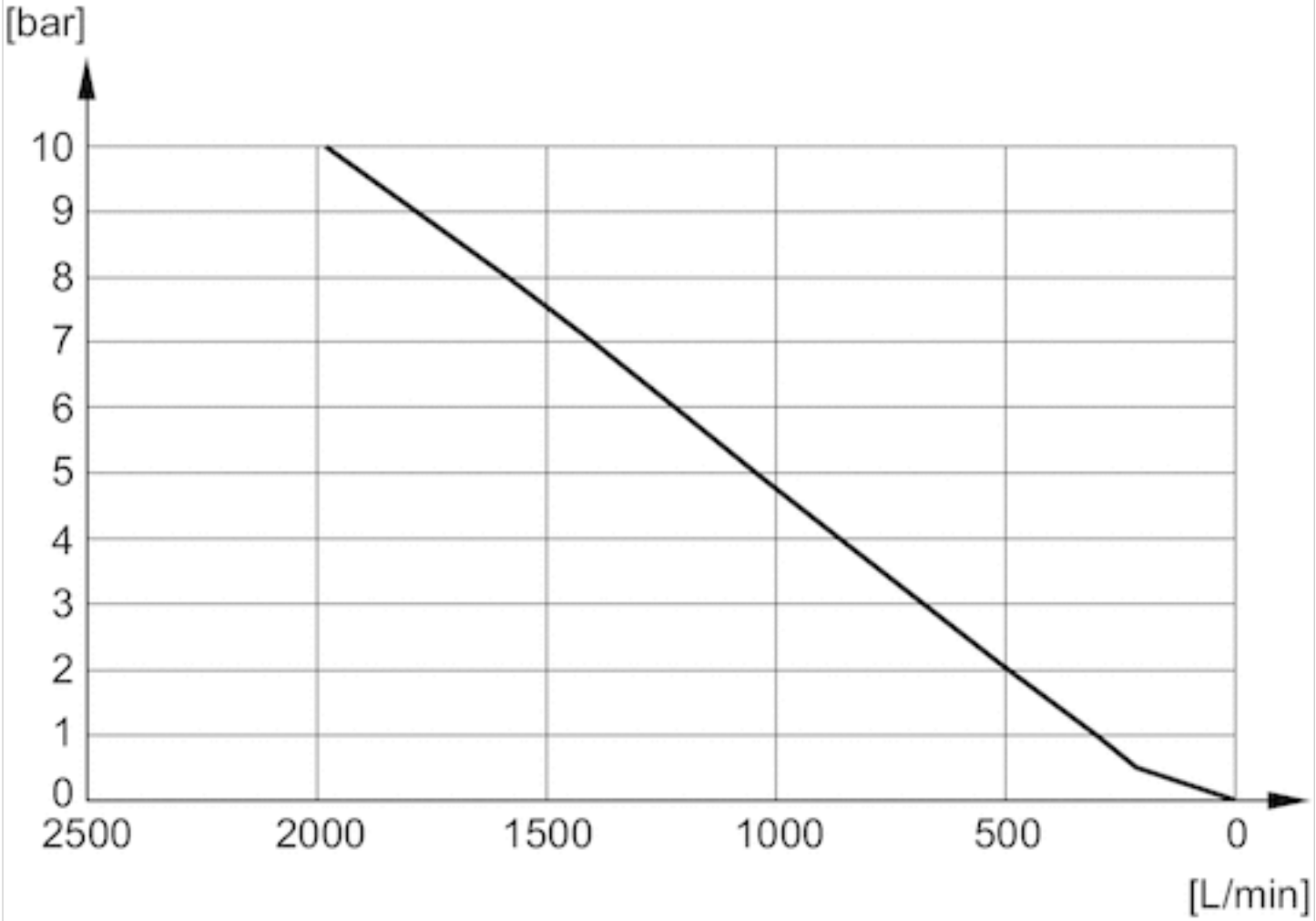

Flow diagram, R412007817

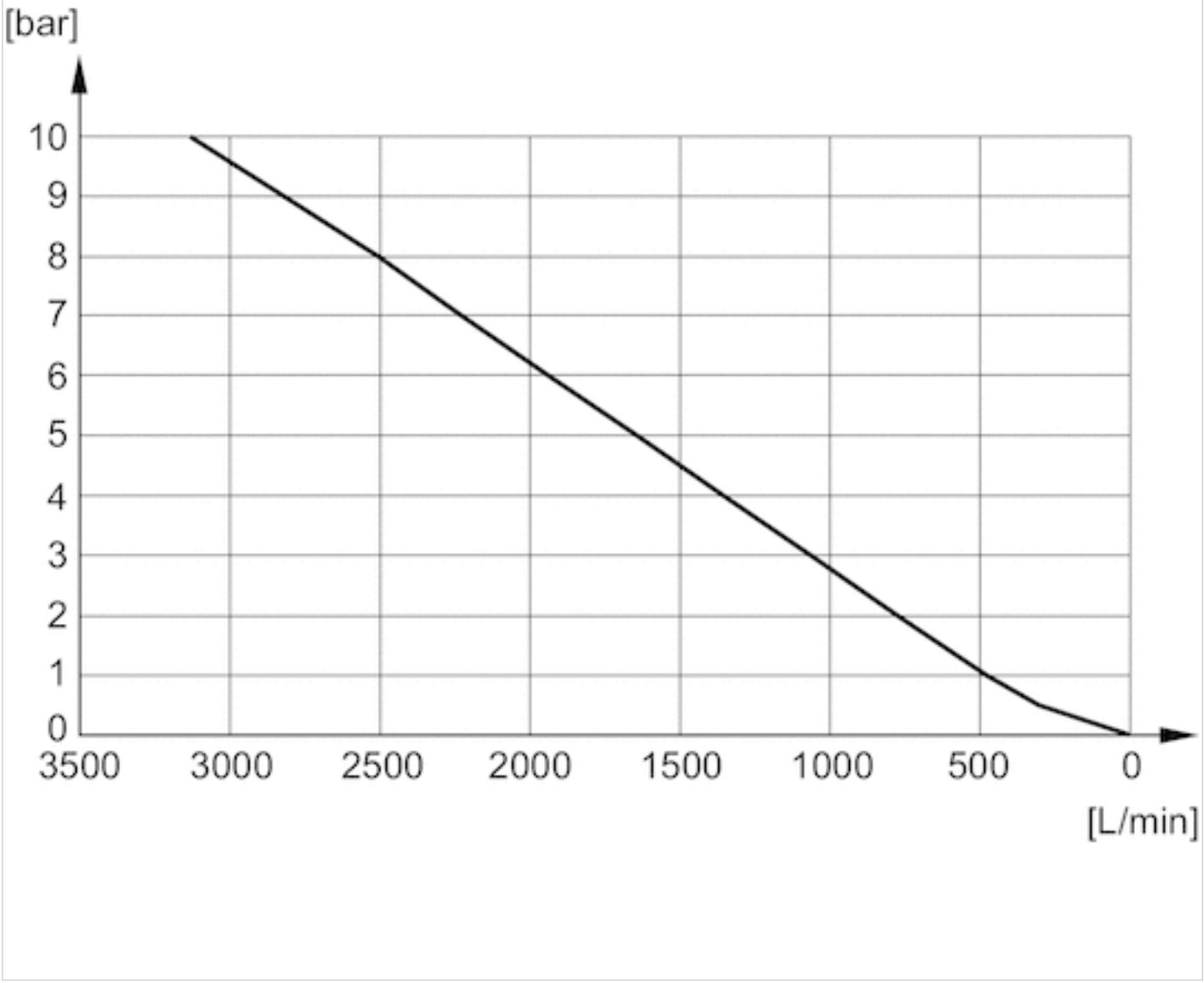

Silencers, series SI1

- M5 G 1/8
- Stainless steel



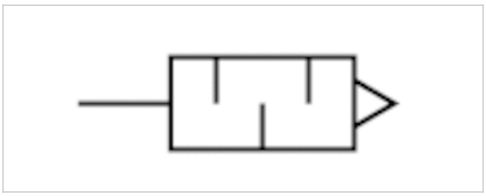

Working pressure min./max.	0 ... 12 bar
Ambient temperature min./max.	-20 ... 150 °C
Medium	Compressed air
Sound pressure level	See table below
Weight	See table below
Comment	Flow characteristic curves can be found under “Diagrams”.

Technical data

Part No.	Compressed air connection	Sound pressure level	Flow	Delivery unit	Weight
			Qn		
R412010090	M5	85 dB	73 l/min	1 piece	0,003 kg
R412010081	G 1/8	90 dB	1312 l/min	1 piece	0,011 kg

Weight per piece

Nominal flow Qn at p1 = 6 bar (absolute) freely discharged. Sound pressure level measured at 6 bar against atmosphere at 1 m distance.

Technical information

Material	
Silencer	Stainless steel
Thread	Stainless steel

Dimensions

Dimensions

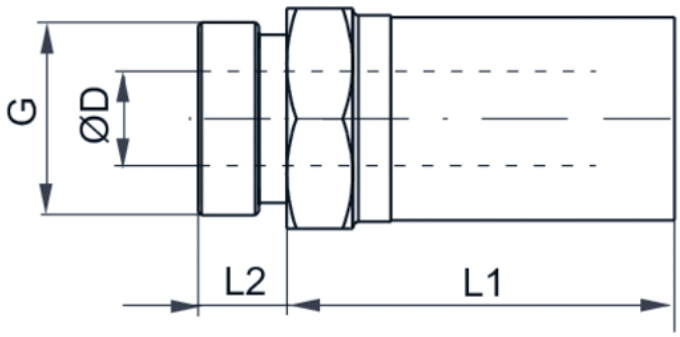

Dimensions

Part No.	Port G	SW	Ø D	L1	L2
R412010090	M5	8	3.1	10.5	3.5
R412010081	G 1/8	13	6.6	20	6

Diagrams

Flow diagram, R412010090

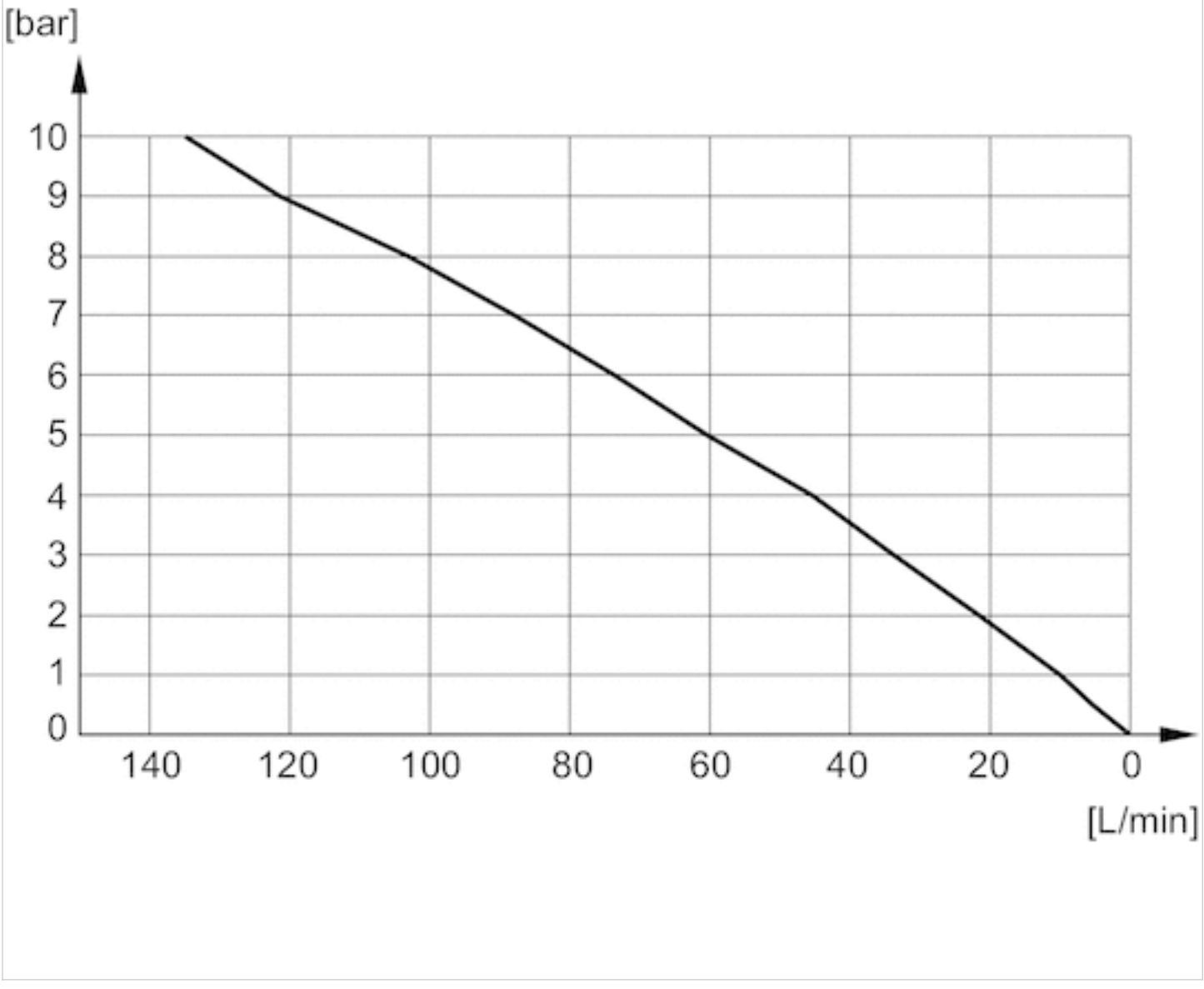

Flow diagram, R412010081

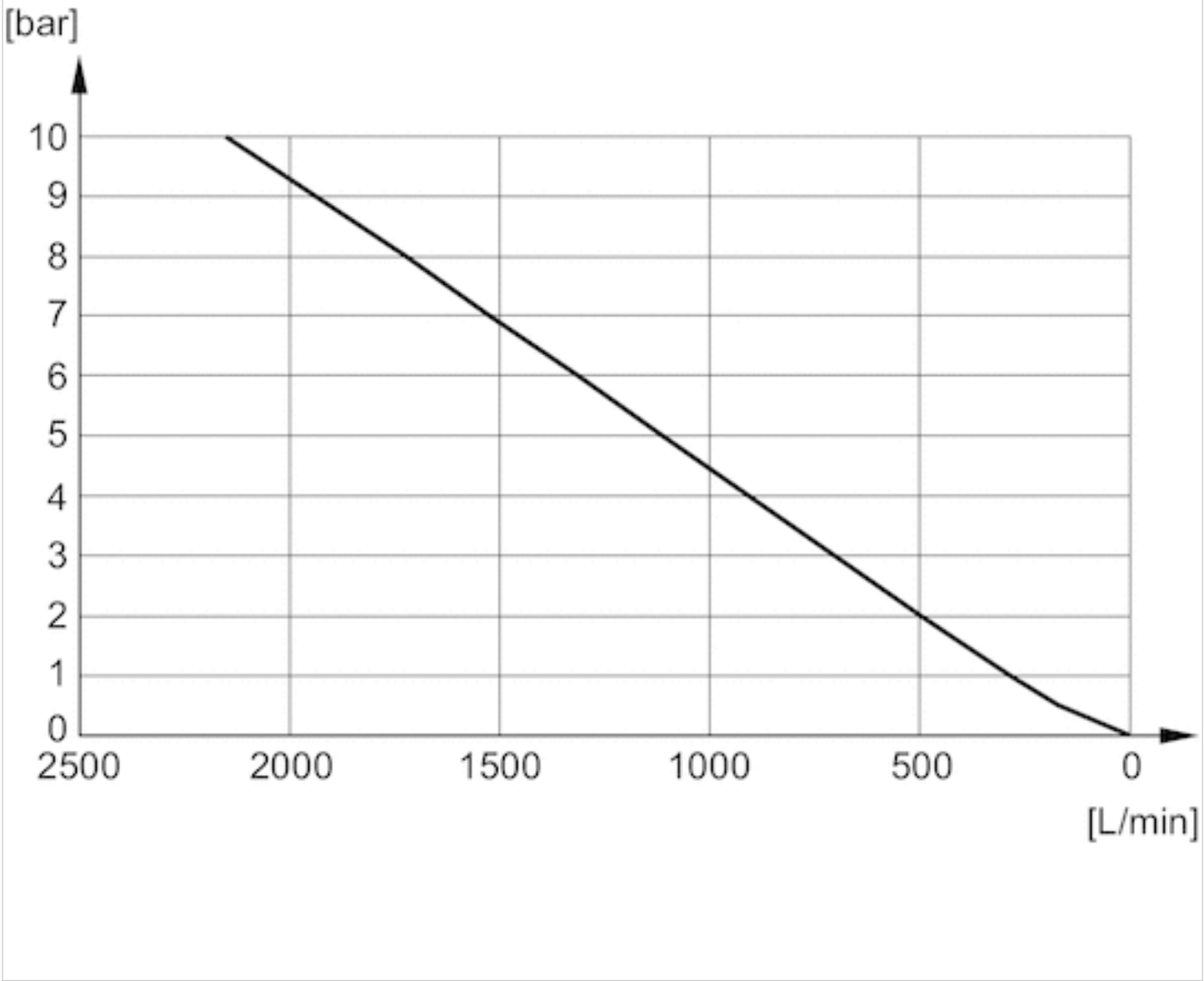

Flow diagram, R412010082

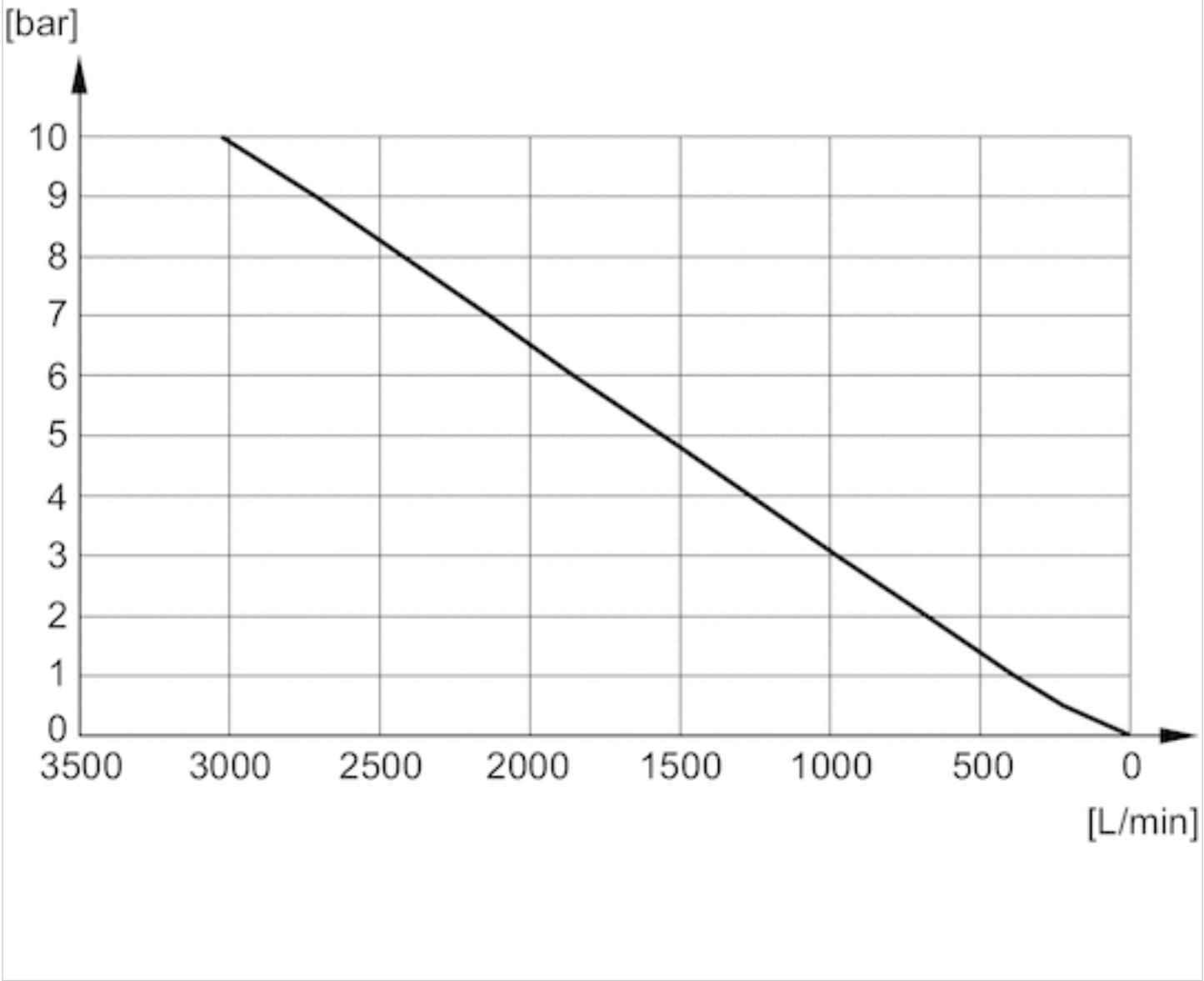

Flow diagram, R412010083

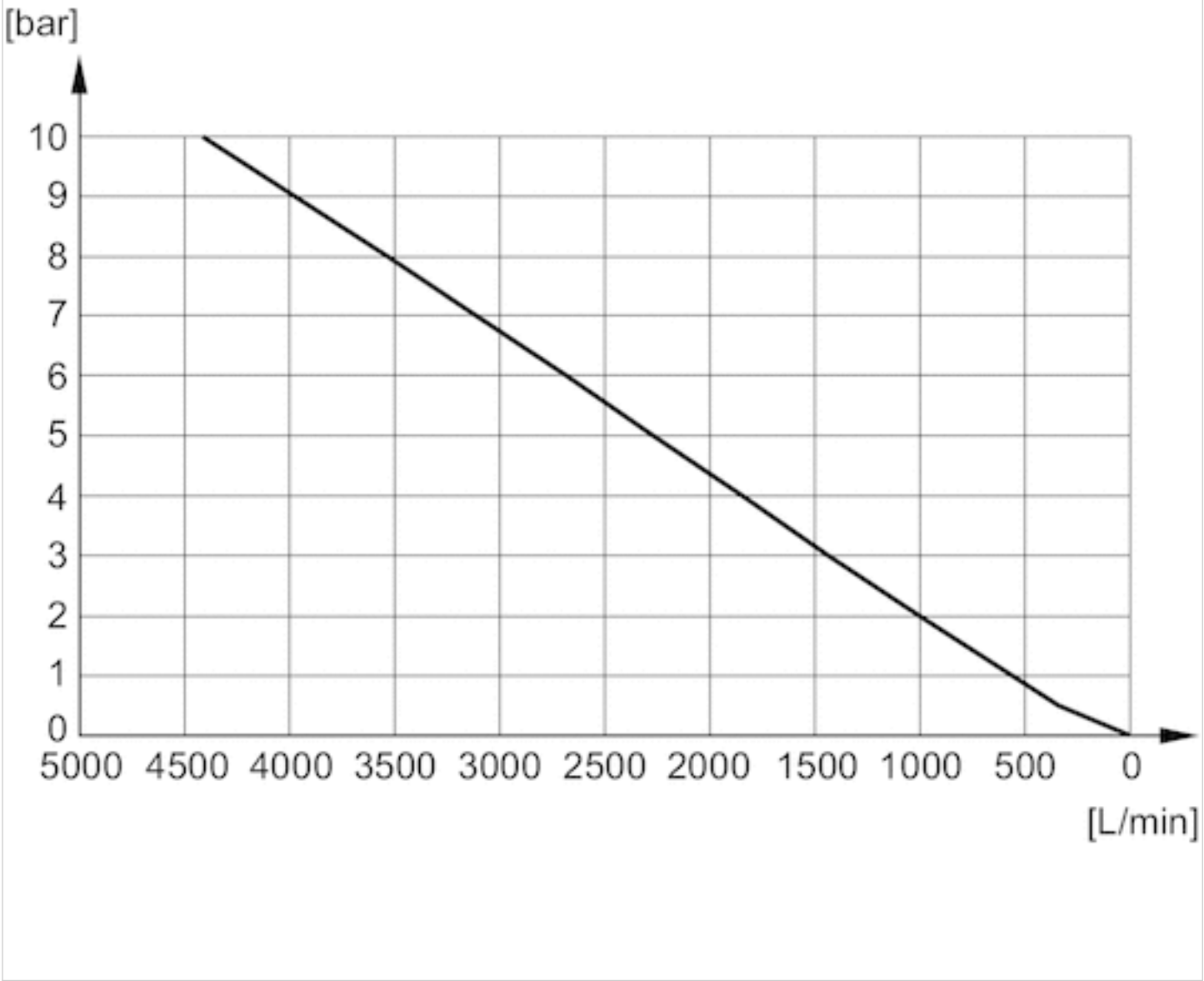

Flow diagram, R412010084

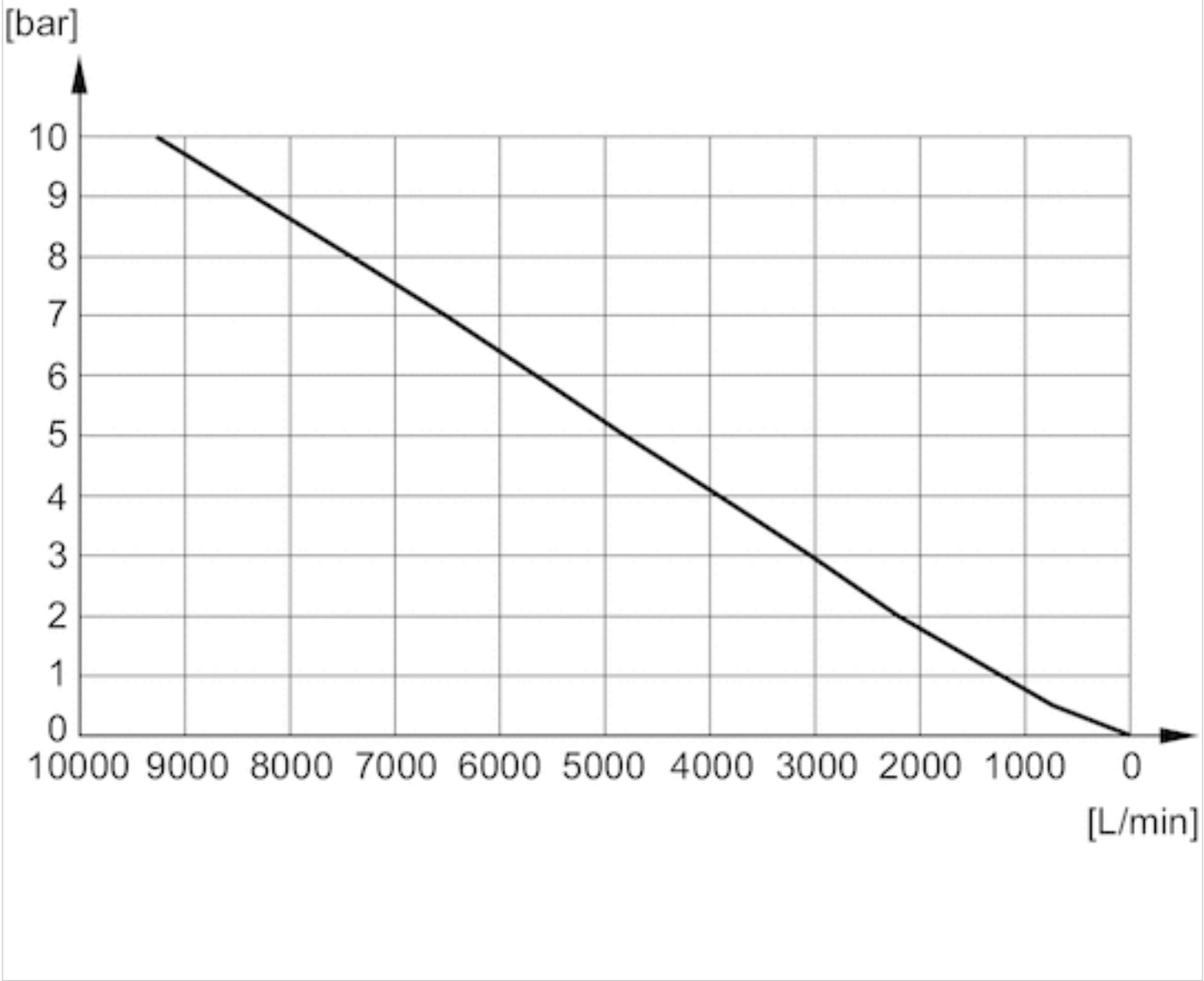

Flow diagram, R412010085

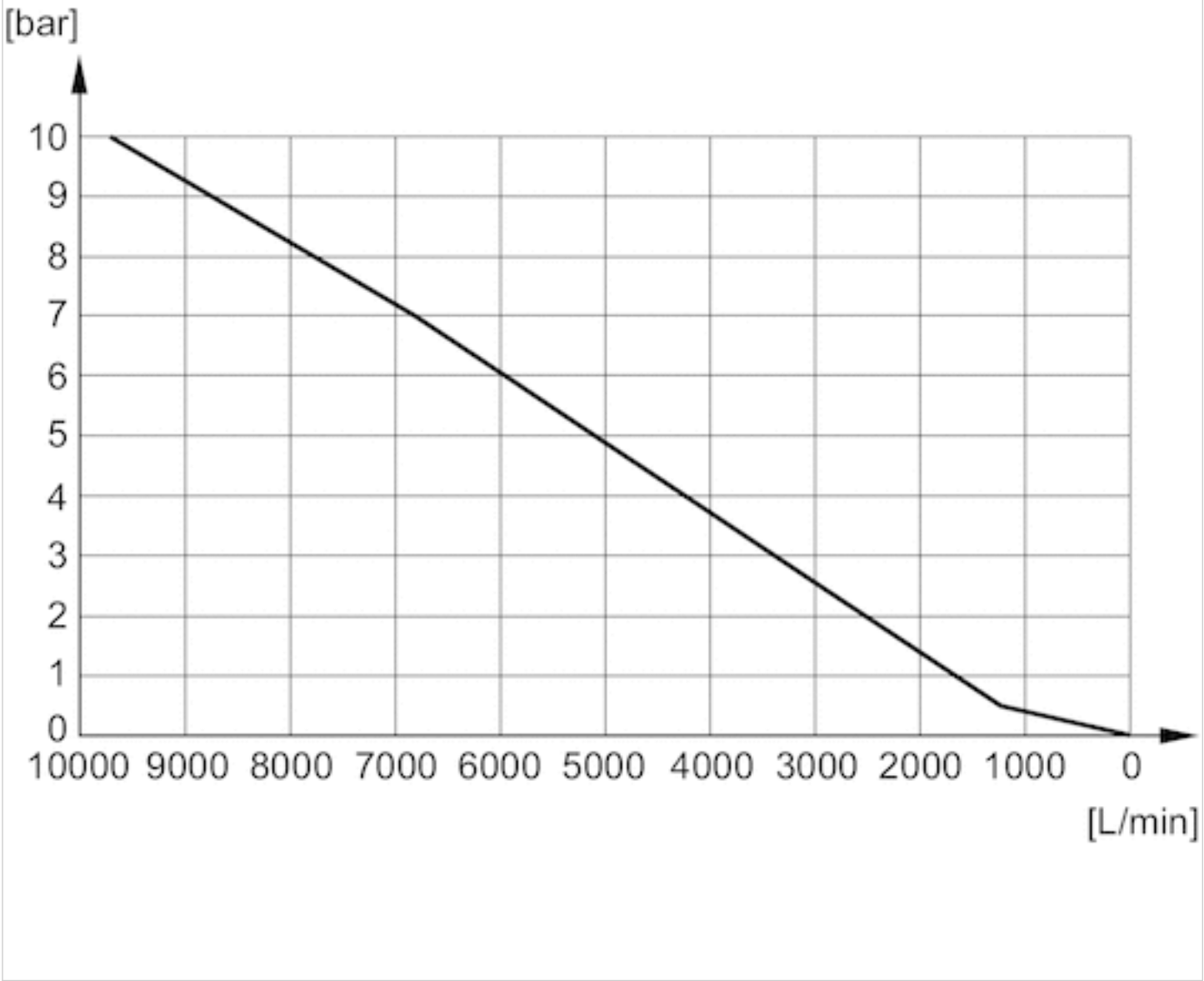

Flow diagram, R412010086

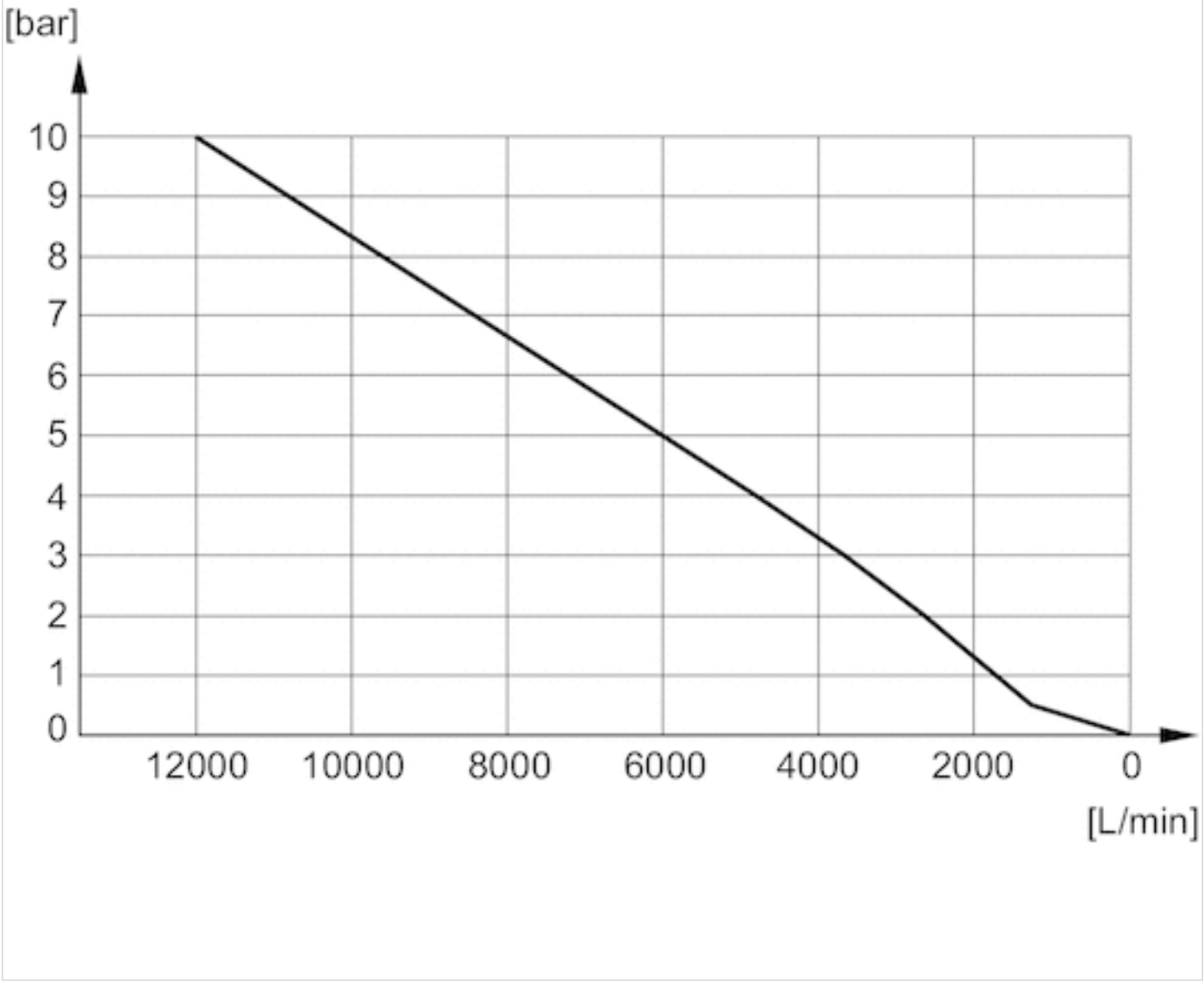

Efficient pneumatic solutions, our program: cylinders and drives, valves and valve systems, air supply management



Visit us: Emerson.com/Aventics

Your local contact: Emerson.com/contactus

Emerson.com

Facebook.com/EmersonAutomationSolutions

LinkedIn.com/company/Emerson-Automation-Solutions

Twitter.com/EMR_Automation

An example configuration is depicted on the title page. The delivered product may thus vary from that in the illustration. Subject to change. This Document, as well as the data, specifications and other information set forth in it, are the exclusive property of AVENTICS GmbH. It may not be reproduced or given to third parties without its consent. Only use the AVENTICS products shown in industrial applications. Read the product documentation completely and carefully before using the product. Observe the applicable regulations and laws of the respective country. When integrating the product into applications, note the system manufacturer's specifications for safe use of the product. The data specified only serve to describe the product. No statements concerning a certain condition or suitability for a certain application can be derived from our information. The information given does not release the user from the obligation of own judgement and verification. It must be remembered that the products are subject to a natural process of wear and aging.

The Emerson logo is a trademark and service mark of Emerson Electric Co. Brand logotype are registered trademarks of one of the Emerson family of companies. All other marks are the property of their respective owners. © 2021 Emerson Electric Co. All rights reserved.
2021-05

EMERSON

CONSIDER IT SOLVED™