GEFRAN

# GRZ-H from 10 to 75A

*ULTRA-COMPACT THREE-PHASE STATIC POWER UNITS WITH DC / AC LOGIC CONTROL*

### *MAIN APPLICATIONS*

- Extrusion, injection, blow moulding, thermoforming of plastics
- Vulcanization of rubber
- Synthetic fibre production and polymerisation
- Packing and packaging
- Dryers for ceramics and building elements
- Industrial electric ovens
- Food processing plants
- Chemical and pharmaceutical industry




### *MAIN FEATURES*

- Wide current range from 10A to 75A per phase
- Ultra-compact size
- Optimized dissipation with 2 controlled phases
- Thermal protection always present
- Input command from logic signal Vdc/ Vac
- Leds signaling
- Cage terminals for power cables
- Load voltage 480V, 600Vac
- Thermal alarm and load fault option with LED and alarm output
- Internal overvoltage protections
- DIN rail and panel fixing
- Switching at Zero Crossing of Voltage
- Compact versions with increased $I^2t$
- Push-in connectors for command signals
- Integrated power supply option for smart cooling fan

### *PROFILE*

Correct management of electrical heating elements for industrial heating applications
requires robust, safe, interference-free, fast and diagnostically capable static contactors.
The range of static contactors with GRZ-H heatsink meets all these requirements, with current ratings from 10 to 75 Amperes for single phase and voltages up to 600 V AC, with extremely compact size in every single current level.
The thermal design of all models guarantees the continuous supply of the rated current at an ambient temperature of 40°C through high efficiency heat sinks, assisted by cooling fans for the higher sizes.The derating curves show how higher current values can also be achieved, at lower temperatures, and illustrates the possibility of mounting various devices in contact with each other on the DIN rail.

### *GRZ COMMAND SIGNAL CONNECTION*

The GRZ-H series can be controlled by DC and AC logical signals managed through push-in connectors for a faster and easier connection, even without tools.
The ON / OFF status of the static device is always displayed by a green LED on the front panel, for an immediate view of its operation.

### *POWER CONNECTIONS*

Both the line voltage terminals available on the upper part of the device and the load terminals on the lower part are of the “cage” type, which offer the best and safest seal even for cables of different cross-sections, whether mounted with a cable lug or simply stripped.

### *DIAGNOSTICS AND ALARMS*

It is increasingly vital for operators and maintainers to recognize possible anomalies in the system immediately and solve them quickly in order to ensure the efficiency and profitability of machinery and plants. The GRZ-H series offers a series of diagnostic information associated with a physical alarm output with voltage-free or PNP-type isolated contact.
The thermal alarm is triggered if heat dissipation exceeds a critical threshold, signalling it with a yellow led on the front panel, interrupting the power supply and triggering the alarm output. Alarm functions are available for all sizes as an option.
The absence of current on the load or line voltage is signaled by a red LED on the front and by the activation of the alarm output.
The absence of current is verified for each single phase, it is therefore possible to detect even a partial failure of one of the three load parts (check the models and conditions of use).
Alarm output status is memorized: in the presence of a 24 V DC auxiliary power supply, the alarm will be memorized even in the event of an OFF command.
The alarm is reset when normal operating conditions are restored, or when the 24 V DC auxiliary power supply is switched off and on again.

## DIMENSIONS AND MOUNTING MEASUREMENTS

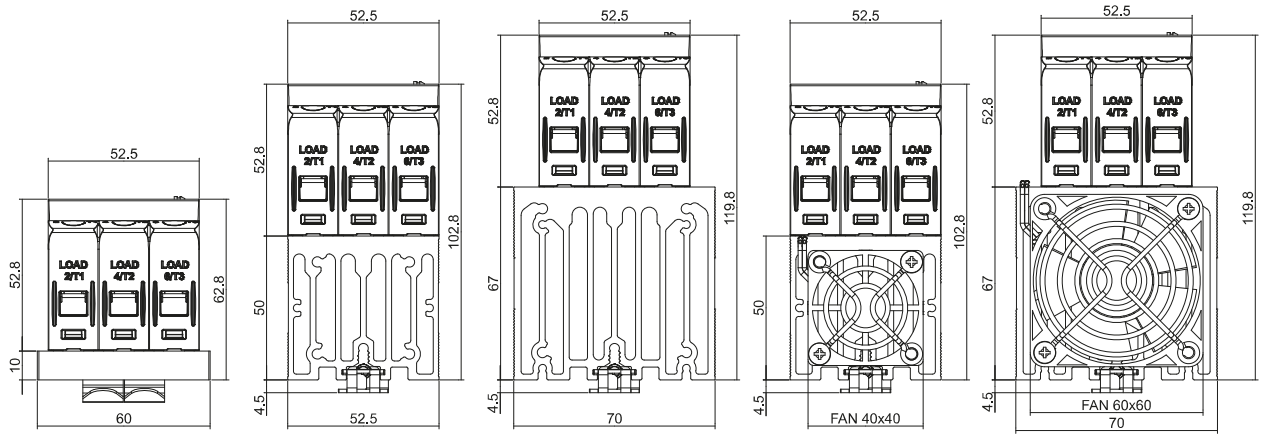


SIZE 1
2S 15
3S 10

SIZE 2
2S 25 25I
3S 20 20I

SIZE 3
2S 30A 30I 40I
3S 25 25I 30I

SIZE 4
2S 40 50
3S 40 40I

SIZE 5
2S 75
3S 65

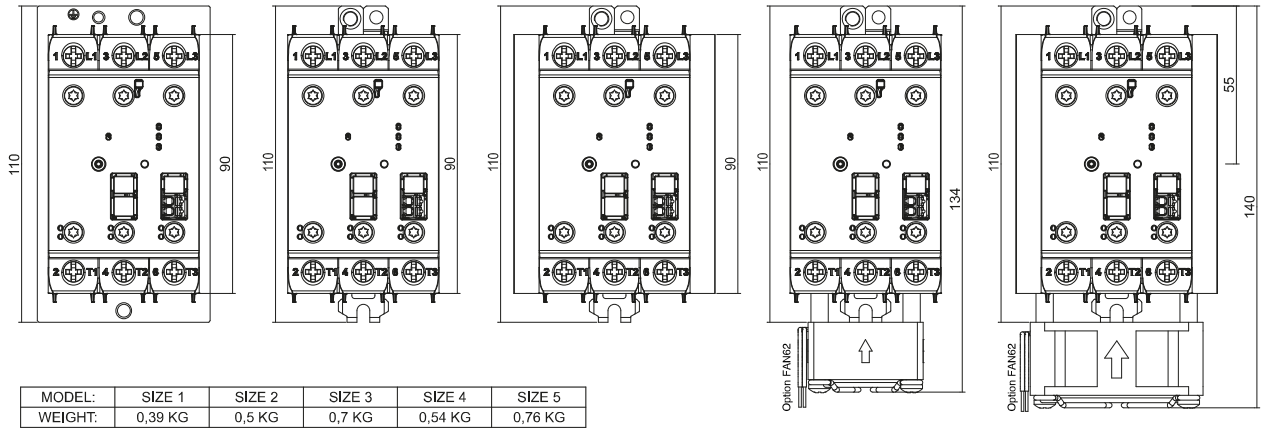


| MODEL: | SIZE 1 | SIZE 2 | SIZE 3 | SIZE 4 | SIZE 5 |
|---|---|---|---|---|---|
| WEIGHT: | 0,39 KG | 0,5 KG | 0,7 KG | 0,54 KG | 0,76 KG |

Option FAN63
(24Vdc pre-wire smart fan)

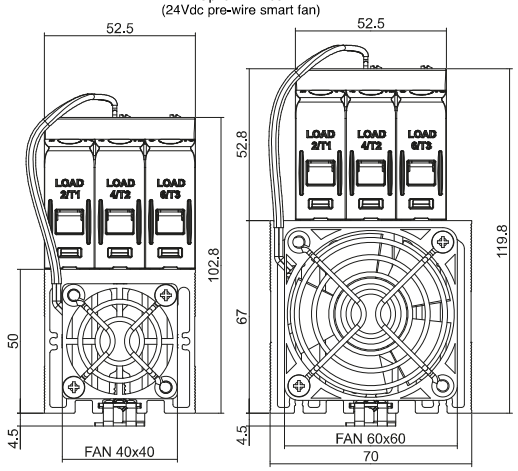


Option FAN64
(230Vac pre-wire smart fan)

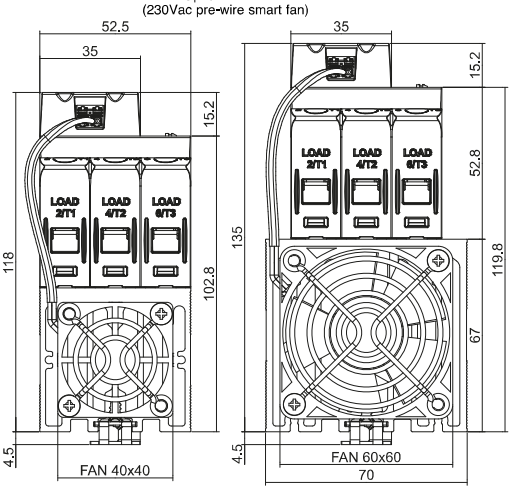


SIZE 4
2S 40 50
3S 40 40I

SIZE 5
2S 75
3S 65

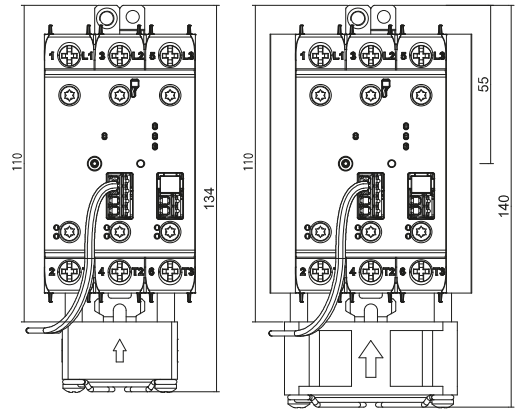


SIZE 4
2S 40 50
3S 40 40I

SIZE 5
2S 75
3S 65

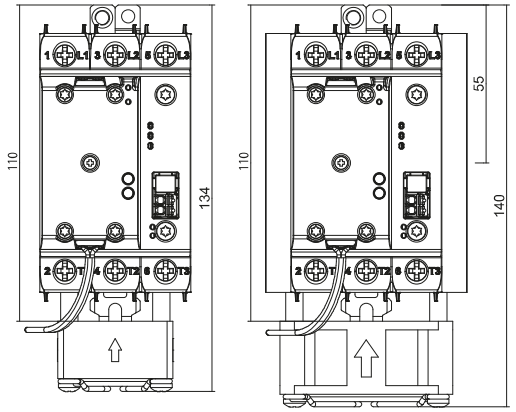


Notes:

## *INSTALLATION*

Use the extra-rapid fuse shown in the catalogue according to the connection example supplied.
Applications with uninterruptible power supply units must also include a safety circuit breaker for disconnecting the power line from the load.
To obtain high device reliability, it is essential to install it correctly inside the panel in order to obtain adequate heat exchange between the heat sink and the surrounding air under conditions of natural convection.
Mount the device vertically (maximum 10° inclination from the vertical axis).
Make sure that the cable ducts do not reduce these distances; in this case, mount the units overhanging the panel, so that the air can flow vertically on the heat sink without hindrance.

**Minimum mounting distance**

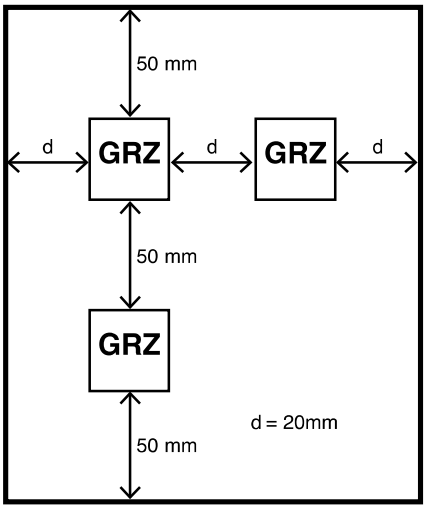


**Limitations of use**

- Ambient temperature limits, depending on derating curves.
- Need for air exchange with the outside or an airconditioner to transfer the dissipated power tothe outside of the panel.
- Installation limits (distances between devicesto ensure dissipation under natural convectionconditions)
- Maximum voltage limits and derivative of thetransients present on the line, for which thestatic unit provides internal protection devices(depending on the models).
- Presence of leakage current < 3mA (max.value with nominal voltage and junction temperatureof 125°C / 257°F).

## *DIN RAIL FIXING*

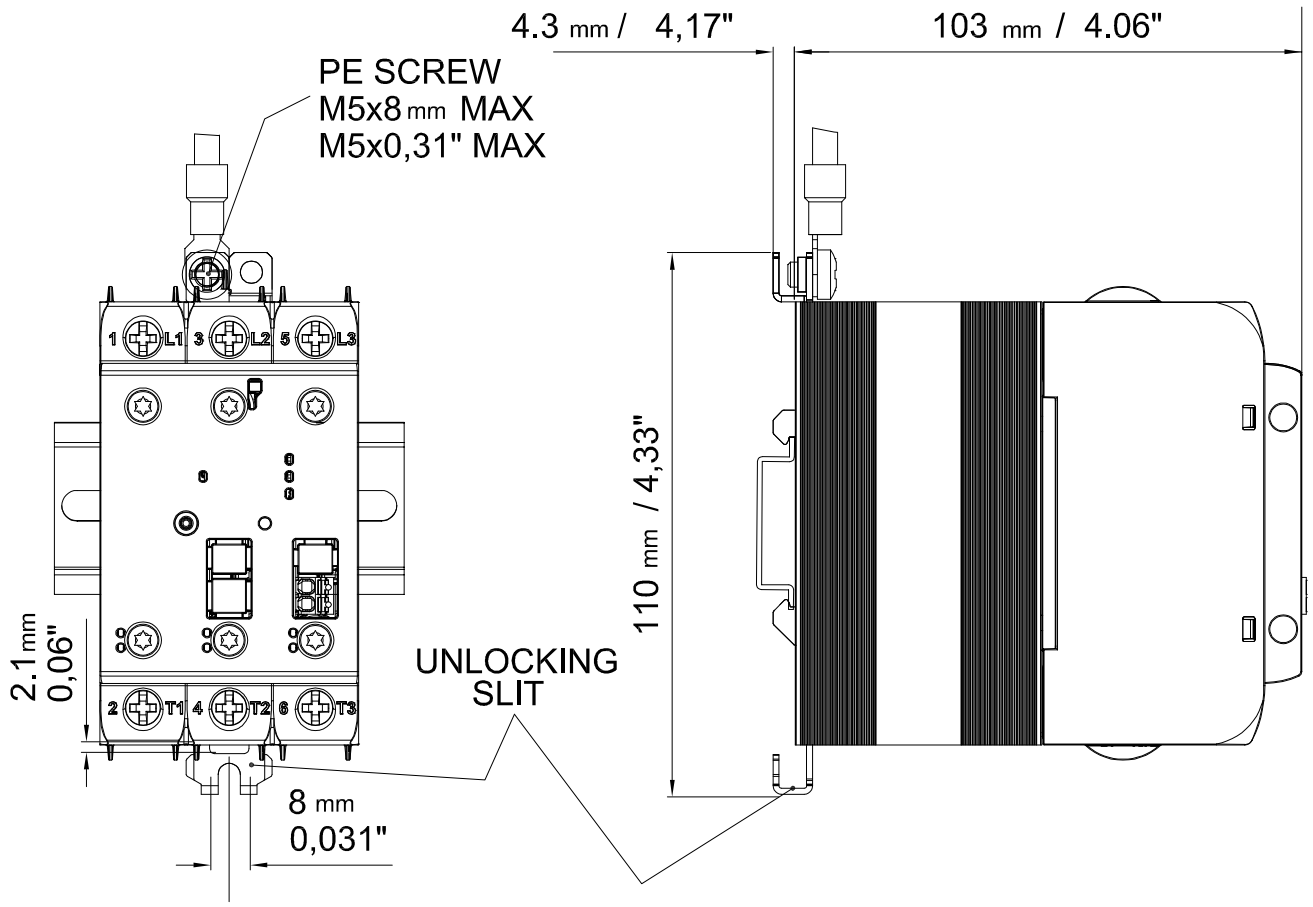


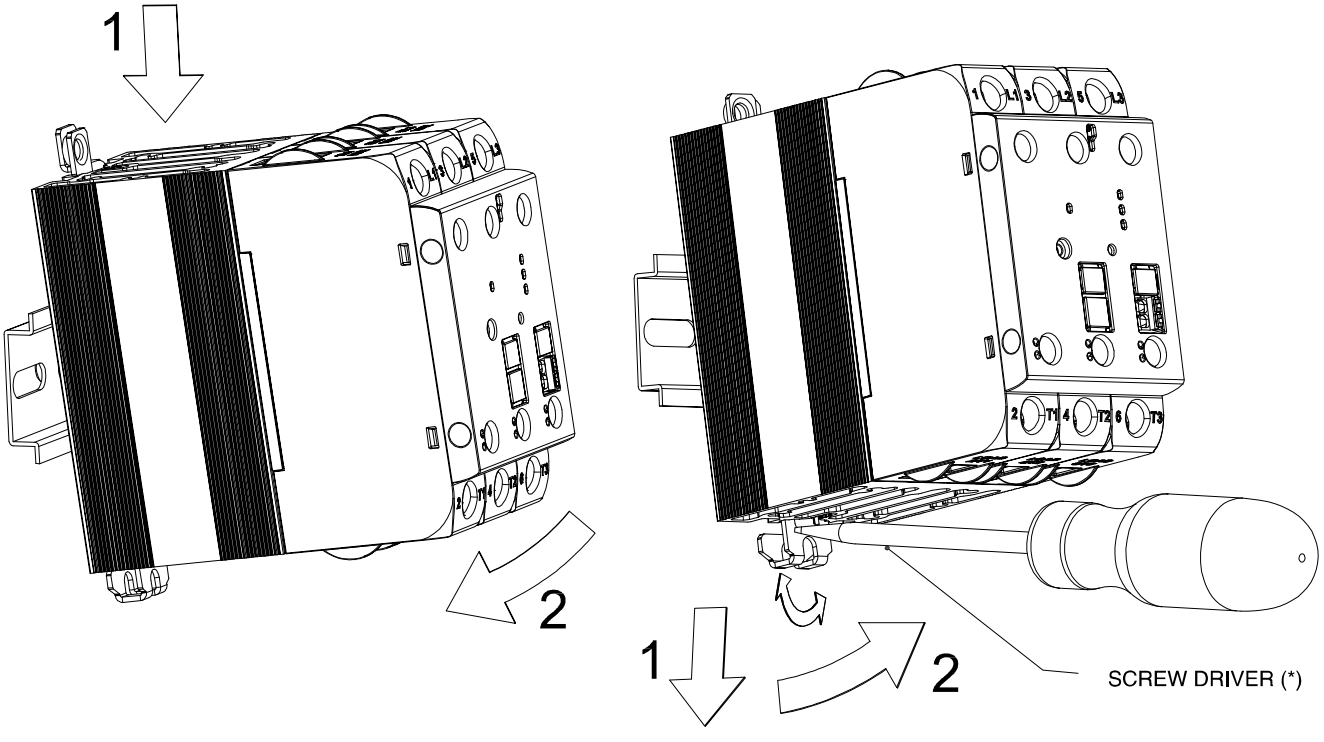


(*) Use of a slotted screwdriver with a max. diameter of 6mm is recommended

## *PANEL FIXING*

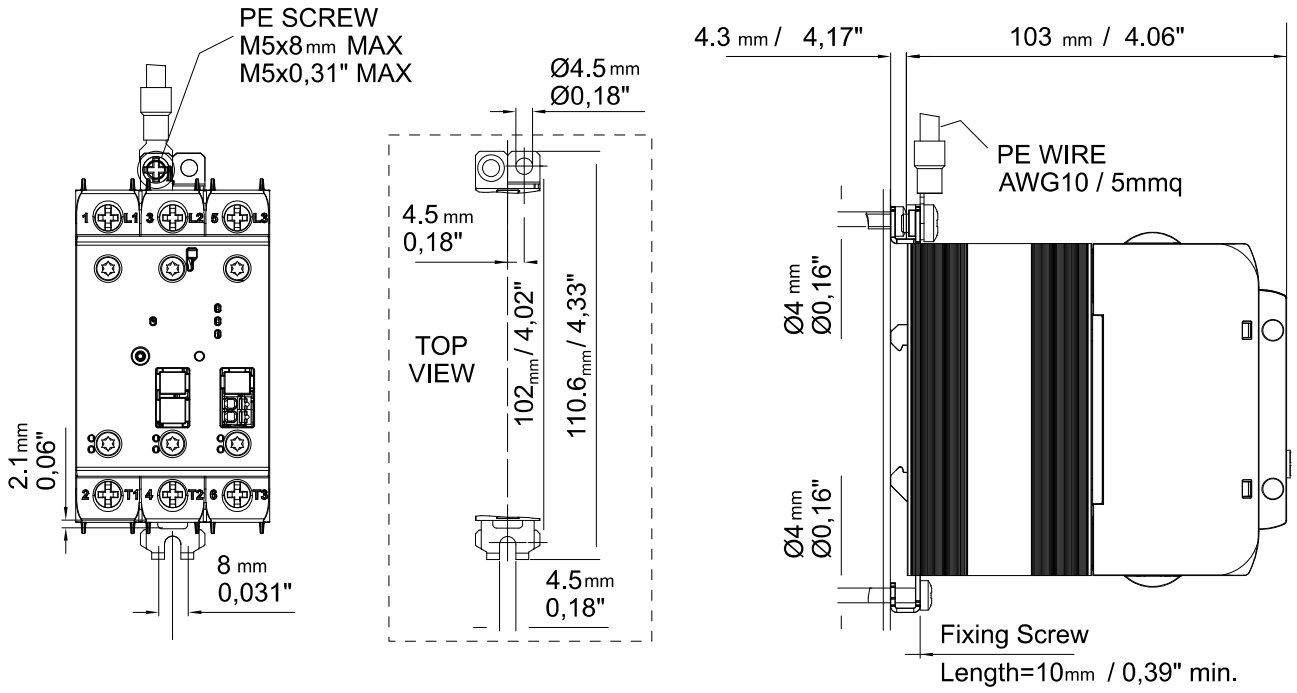

## *DESCRIPTION OF CONNECTIONS*

### Command D without diagnostic option (GRZ…D-0)

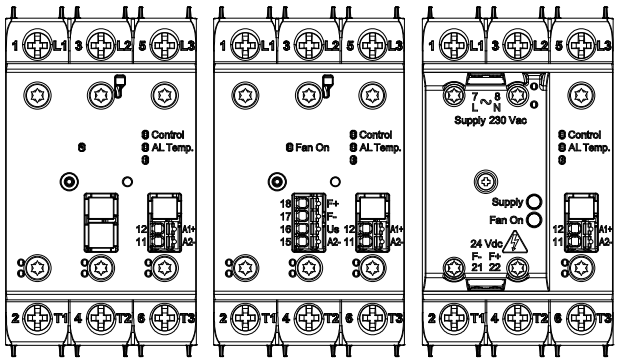


D-0
NO FAN /FAN62

D-0
FAN-63

D-0
FAN-64

### Command D with diagnostic option (GRZ…D-1/2/3)

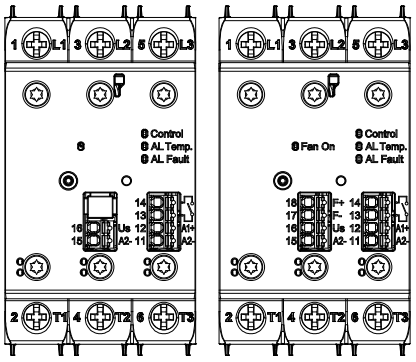


D-1
NO FAN / FAN-62

D-1
FAN-63

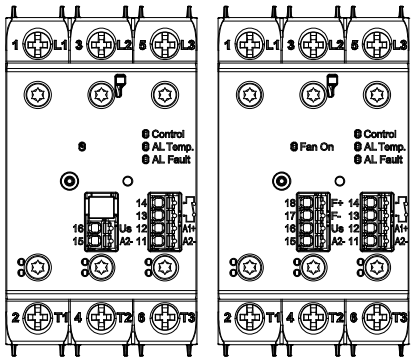


D-2
NO FAN / FAN-62

D-2
FAN-63

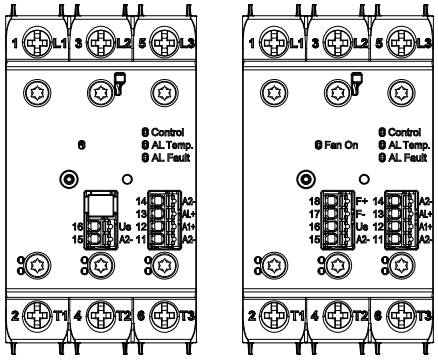


D-3

D-3

| | |
|---|---|
| **1/L1, 2/L2, 3/L3** | Mains power line connections |
| **2/T1, 4/T2, 6/T3** | Load connections |
| **7/L** | Vac Fan Supply FAN64 |
| **8/N** | Vac Fan Supply FAN64 |
| **11/A2-** | Ground On/Off Control signal |
| **12/A1+** | Positive On/Off signal command Vdc |
| **13/A2-** | Ground (common with 11/A2-) |
| **14/AL+** | Alarm output (D-3 version; PNP output) |
| **13**  **14** | Alarm output (D-1,D-2 version; NO,NC contacts) |
| **15/A2-** | Ground (common with 11/A2-) |
| **16/Us** | Power supply, positiv signal |
| **17/F-** | Ground of output power supply fan (pre-wired) FAN63 |
| **18/F+** | Positive of output power supply fan (pre-wired) FAN63 |
| **21/F-** | Ground of output power supply fan (pre-wired) FAN64 |
| **22/F+** | Positive of output power supply fan (pre-wired)FAN64 |
|  | Remove the power supply in case of replacement or maintenance of pre-wired fans |
| **Control (Green led)** | Status of the command signal |
| **Al Fault (Red led)** | Power Fault alarms (No Voltage, No current) |
| **Al Temp. (Yellow led)** | Over-temperature status |
| **Fan On (Yellow led)** | Cooling fan activated |
| **Supply (Green led)** | presence of Vac power supply for fan |

## *DESCRIPTION OF CONNECTIONS*

### Command A without diagnostic option (GRZ…A-0)

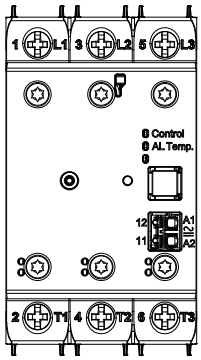


A-0
NO FAN / FAN-62

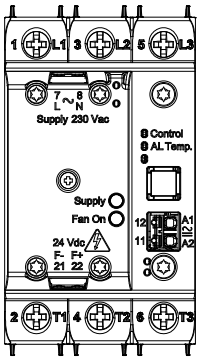


A-0
FAN-64

### Command A with diagnostic option (GRZ…A-2)

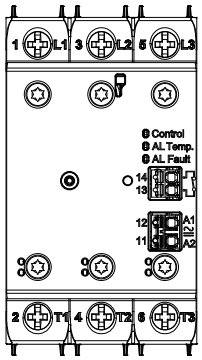


A-2
NO FAN / FAN-62

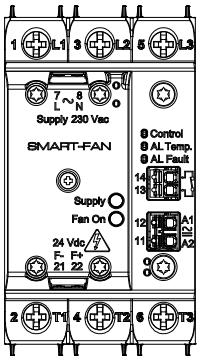


A-2
FAN-64

| | |
|---|---|
| **1/L1 , 2/L2 , 3/L3** | Mains power line connections |
| **2/T1 , 4/T2 , 6/T3** | Load connections |
| **7/L** | Vac Fan Supply FAN64 |
| **8/N** | Vac Fan Supply FAN64 |
| **11/A2 ~** | On/Off signal command Vac |
| **12/A1~** | On/Off signal command Vac |
| **13**<br>**14** | Alarm output |
| **21/F-** | Ground of output power supply fan FAN64 (pre-wired) |
| **22/F+** | Positive of output power supply fan FAN64 (pre-wired) |
| ⚠ | Remove the power supply in case of replacement or maintenance of pre-wired fans |
| **Control (Green led)** | Status of the command signal |
| **Al Fault (Red led)** | Power Fault alarms (No Voltage, No current) |
| **Al Temp. (Yellow led)** | Over-temperature status |
| **Fan On (Yellow led)** | Cooling fan activated |
| **Supply (Green led)** | presence of Vac power supply for fan |

## *COMAND INPUT*

| Control Type | Type D | | Type A |
|---|---|---|---|
| Pin | 11/A2- , 12/A1+ | | 11/A2 , 12/A1~ |
| Diagnostic options | D-0 | D-1/2/3 | A-0/2 |
| Control voltage | 4,9V...32Vdc | 3...32Vdc | 20...260 Vac/Vdc |
| Max. command absorption | < 15mA @32V | <5mA @32V | < 8 mAac/dc @260 Vac/Vdc |
| Maximum reverse voltage | 36Vdc | 36Vdc | - |
| Voltage of guaranteed ON | ≥4,9Vdc | ≥ 3Vdc | ≥ 15Vac/Vdc |
| Voltage of guaranteed OFF | ≤4,3Vdc | ≤ 1,8Vdc | ≤ 6Vac/ |
| Impedance input | 500 kΩ | 7,26 kΩ | - |

## *POWER SUPPLY AND FAN*

| **Smart fan** | |
|---|---|
| Power supply (needed with diagnostic options D-1/2/3)<br>(pin 15/A2-,16/Us) | 6..32 Vdc, Imax <15 mA @32V |
| Power supply with FAN63<br>(pin 15/A2-,16/Us) | 20..27 Vdc, Imax <100 mA @24V (FAN ON)<br>For 2S-50, 3S-40/40I<br><br>20..27 Vdc, Imax <150 mA @24V (FAN ON)<br>For 2S-75, 3S-65 |
| Power supply with FAN64<br>(pin 7/L, 8/N) | 110-230Vac<br>Imax<20mA @ 230Vac<br>Imax<40mA @110Vac |
| **Fan directly powered** | |
| FAN6 2 fan direct power supply<br>(FAN62 option fan must be connected via the two supplied 30cm power cables) | 20..27 Vdc, Imax <100 mA @24V (FAN ON)<br>For 2S-50, 3S-40/40I<br><br>20..27 Vdc, Imax <150 mA @24V (FAN ON)<br>For 2S-75, 3S-65 |

## *ALARM OUTPUT (Diagnostics option)*

| Function | No Voltage OR No Current OR Overtemperature | | | |
|---|---|---|---|---|
| Command+Diagnostics option | D-1 | D-2 | D-3 | A-2 |
| Pin | 13,14 | 13,14 | 13/A2-, 14/AL+ | 13,14 |
| Output Type | Contact | Contact | PNP | Contact |
| State | Normally open (NO) | Normally Close (NC) | Normally Inactive (NO) | Normally Close (NC) |
| Rated voltage | 30Vdc/25Vac | 30Vdc/25Vac | Us - 0.7Vdc | 30Vdc/25Vac |
| Conduction impedance | ≤ 1Ω | ≤ 15Ω | - | <=1Ohm |
| Maximum current | 150mA | 50mA | Iout max. = 15mA | 150mA |
| Maximum alarm intervention delay | < 400ms | | | |
| OR combination of multiple alarm signals | A single alarm signal equivalent to the logical OR of alarms of multiple GRZ devices can be obtained.<br>Connect the alarm outputs (pins 13 and 14) in parallel (in the case of diagnostic option «1» and «3», NO) or in series (in the case of option «2», NC). | | | |

## *TECHNICAL SPECIFICATIONS*

| **POWER OUTPUT** | | |
|---|---|---|
| Controlled phases | 3 controlled phases in the 3S version<br>2 controlled phases and one passing trought in the 2S version | |
| Category of use<br>(Tab. 2 EN60947-4-3) | AC 51: resistive or low-inductance loads | |
| Trigger modes | Zero crossing | |
| Activation time | 1/2 cycle | |
| Deactivation time | 1/2 cycle | |
| Potential drop at rated current | < 1,2Vrms | |
| Power factor | 1 | |
| Rated working voltage | 480 Vac | 600 Vac |
| Working voltage range | 24...530Vac | 24 ... 660Vac |
| Non-repetitive voltage<br>(Surge protection level) | 1200 Vp | 1400 Vp |
| Switching voltage for zero | < 20V | |
| Rated frequency | 50/60 Hz | |
| critical dv/dt with output disabled | 1000 V/µs | |
| Nominal insulation voltage input/output | 4kVac rms for 1 minut | |
| Rated current in short circuit condition | 5kA | |
| Minimum load current | 150 mA | |
| Potential drop at rated current | = < 1,2Vrms | |
| Presence of leakage current | < 3mA<br>(Maximun value with nominal Voltage and Junction temperature of 125°C / 257°F). | |
| Calculation of power dissipation | Pd = 1,2 * Irms[W]*n<br>Irms = single-phase load current.<br>n=number of controlled phases, 2 for 2S models, 3 for 3S models | |
| Thermal protection | The temperature of the SCR module is constantly monitored inside the device.<br>When the maximum temperature threshold of the internal SCR is exceeded, current conduction to the load is interrupted and the yellow thermal protection LED comes on to signal the condition. | |

| Model | Nominal current (@40°C) for each phase[A] | Non-repetitive overcurrent (t=20msec) [A] | I2t for blowout (t=1…10msec) [A2s] | Dimensions [mm] See drawings for details and FAN64 versions | | |
|---|---|---|---|---|---|---|
| | | | | Width | Height | Depth |
| **2S** | | | | | | |
| 15 | 15 | 620 | 1800 | 60 | 110 | 62,8 |
| 25 | 25 | 620 | 1800 | 52,5 | 90 | 102,8 |
| 25I | 25 | 1600 | 12800 | 52,5 | 90 | 102,8 |
| 30 | 30 | 620 | 1800 | 70 | 90 | 119,8 |
| 30I | 30 | 1600 | 12800 | 70 | 90 | 119,8 |
| 40 | 40 | 620 | 1800 | 52,5 | 134 (w. fan) | 102,8 |
| 40I | 40 | 1600 | 12800 | 70 | 90 | 119,8 |
| 50 | 50 | 1600 | 12800 | 52,5 | 134 (w. fan) | 102,8 |
| 75 | 75 | 1600 | 12800 | 70 | 140 (w. fan) | 119,8 |
| **3S** | | | | | | |
| 10 | 10 | 620 | 1800 | 60 | 110 | 62,8 |
| 20 | 20 | 620 | 1800 | 52,5 | 90 | 102,8 |
| 20I | 20 | 1600 | 12800 | 52,5 | 90 | 102,8 |
| 25 | 25 | 620 | 1800 | 70 | 90 | 119,8 |
| 25I | 25 | 1600 | 12800 | 70 | 90 | 119,8 |
| 30I | 30 | 1600 | 12800 | 70 | 90 | 119,8 |
| 40 | 40 | 620 | 1800 | 52,5 | 134 (w. fan) | 102,8 |
| 40I | 40 | 1600 | 12800 | 52,5 | 134 (w. fan) | 102,8 |
| 65 | 65 | 1600 | 12800 | 70 | 140 (w. fan) | 119,8 |

| **GENERAL CHARACTERISTICS** | | |
|---|---|---|
| Protection rating | IP20 | |
| Working temperature | 0…70°C (32 ... 158°F) (see deratIng curves) | |
| Storage temperature | -20°C - +85°C (-4 ... 185°F)<br>average temperature in a period of 24H not higher than 35°C (95°F)(according to EN 60947-4-3 § 7.1.1) | |
| Maximum relative humidity | 90% non-condensing a 40°C | |
| Environmental conditions of use | Indoor use, maximum altitude 2000m<br>For higher altitudes consider:<br>- Derating of 1% of the rated current every 100m above 2000m altitude.<br>- Derating of the maximum voltage by correction factor:<br>0.88 from 2000 to 3000m<br>0.77 from 3001 to 4000m<br>0.68 from 4001 to 5000m<br><br>Example for GRZ-..25-60.. at 2800 masl<br>- 25A nominal derated by 1%*8-->23A<br>- 600Vac nominal, maximum voltage 660Vac derated to 660*0,88=580,8Vac. | |
| Installation | DIN EN50022 bar or panel mount by screws | |
| Installation requirements | Installation category II, pollution degree 2<br><br>Maximum air temperature around the device 40°C / 104°F (for Temperature >40°C / 104°F see derating curves) | |
| Weight | GRZ-H 2S 15A, 3S 10A | 390 g / 13,76 Oz |
| | GRZ-H 2S 25/25I , 3S 20/20I | 500 g / 17,64 Oz |
| | GRZ-H 2S 25/25I , 3S 20/20I | 700 g / 24,69 Oz |
| | GRZ-H 2S 30/30I/40I, 3S 25/25I/30I | 540 g / 19,05 Oz |
| | GRZ-H 2S 75, 3S 65 | 760 g / 26,81 Oz |
| | GRZ-H 10,15A | 796 g / 28,09 Oz |

## *OPERATION*

### Logic voltage output command

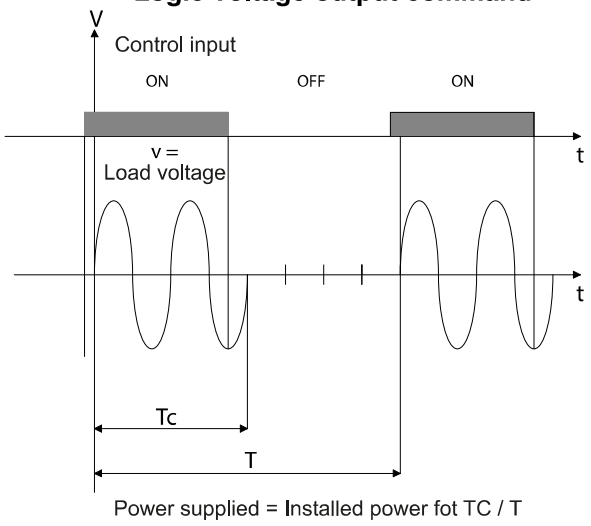


Power supplied = Installed power fot TC / T

### OVER TEMPERATURE PROTECTION AND SMART FANS

#### All Models

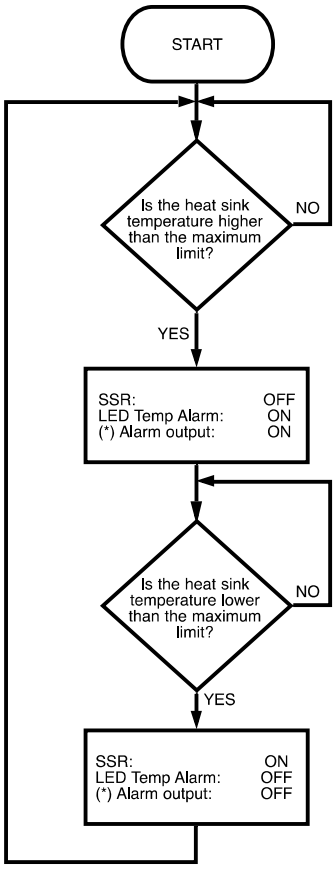


#### Models with FAN63 / FAN64 option

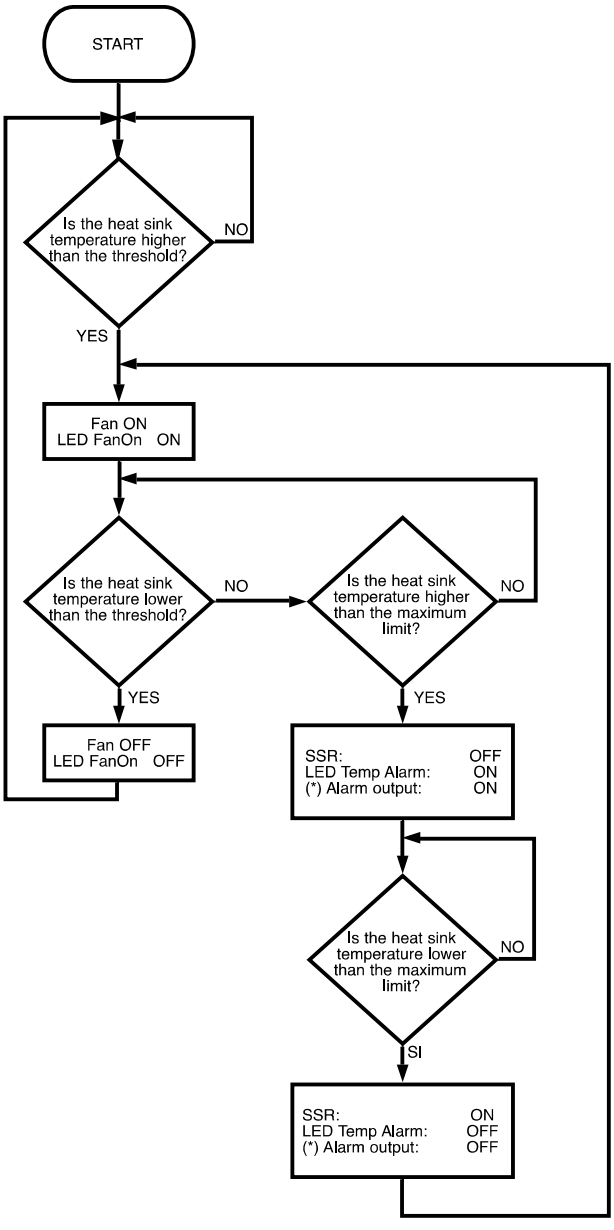

## *ALARMS*

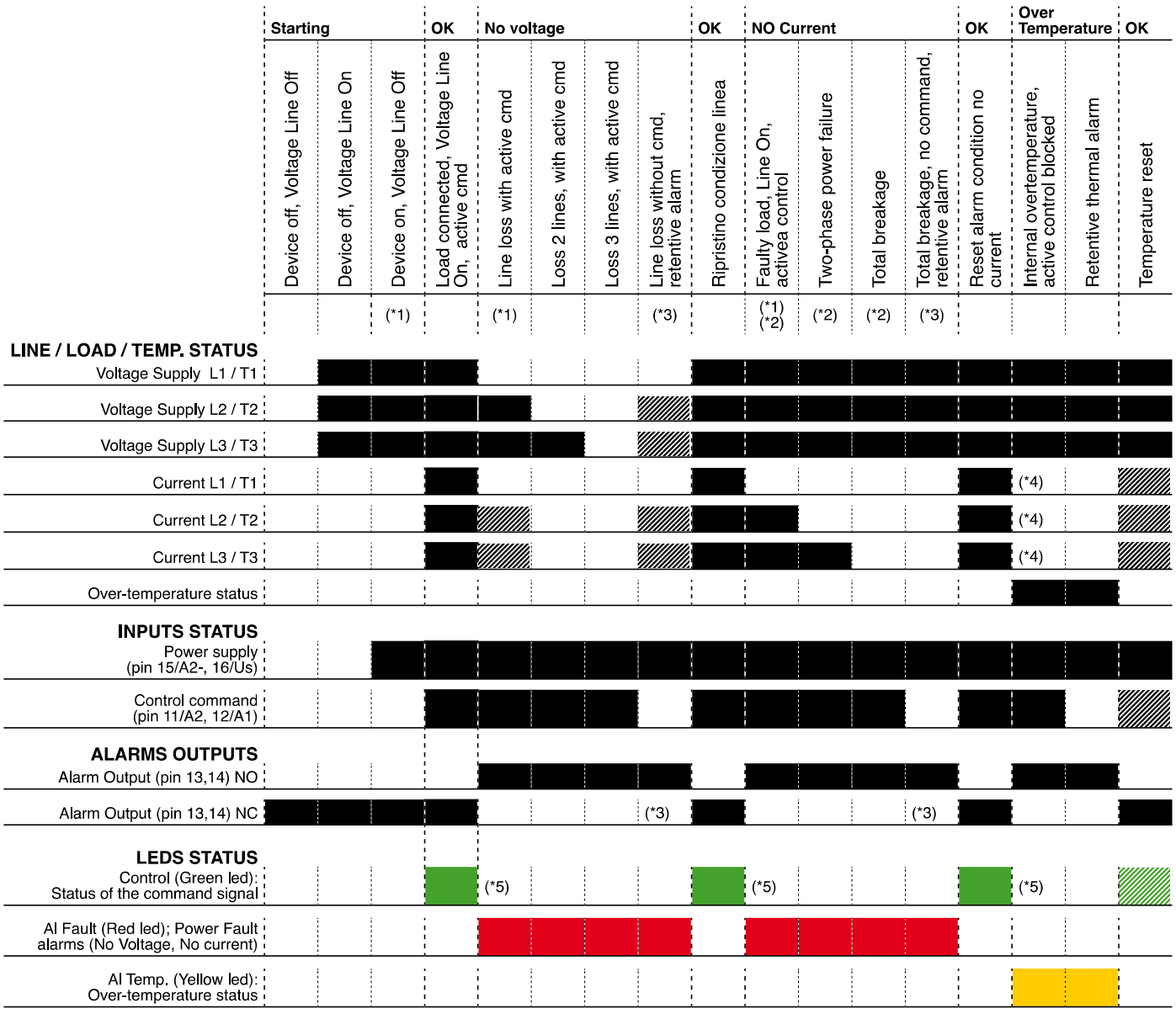


**(*1)** The GRZ..2S models detect the current or voltage fault only on the 2 controlled phases (L2/T2, L3/T3). GRZ..3S detects the faults on all three (L1/T1,L2/T2, L3/T3).

**(*2)** Each GRZ-H controlled phase is able to monitor the presence of current. In the case of star connection(with or without neutral) or open delta, it is sufficient for one of the 3 load branches to fail to detect total absence of current. For close delta type loads, it is necessary that at least two sides of the delta are faulty in order to detect the total absence of current on at least one branch.

**(*3)** Only for D-1/2/3 versions (which needs power supply) the alarm is kept active even in conditions in which there is no command signal. For the A-2 versions (which do not have a power supply) the alarms are managed only with the command active.

**(*4)** When the internal overtemperature condition is detected, the device goes into protection condition and does not actuate the command, avoiding further overheating

**(*5)** In alarm conditions, the green Control LED goes off, even in the presence of an active command.

## *CONNECTION EXAMPLES*

*Three-phase Triangle or Star connection without neutral on Three phases - GRZ with V DC or AC command input ("D" or "A" type input)*
*Valid for 2S (3PH, 2 controlled 1 pass through) models and for 3S (3PH, 3 controlled) models*

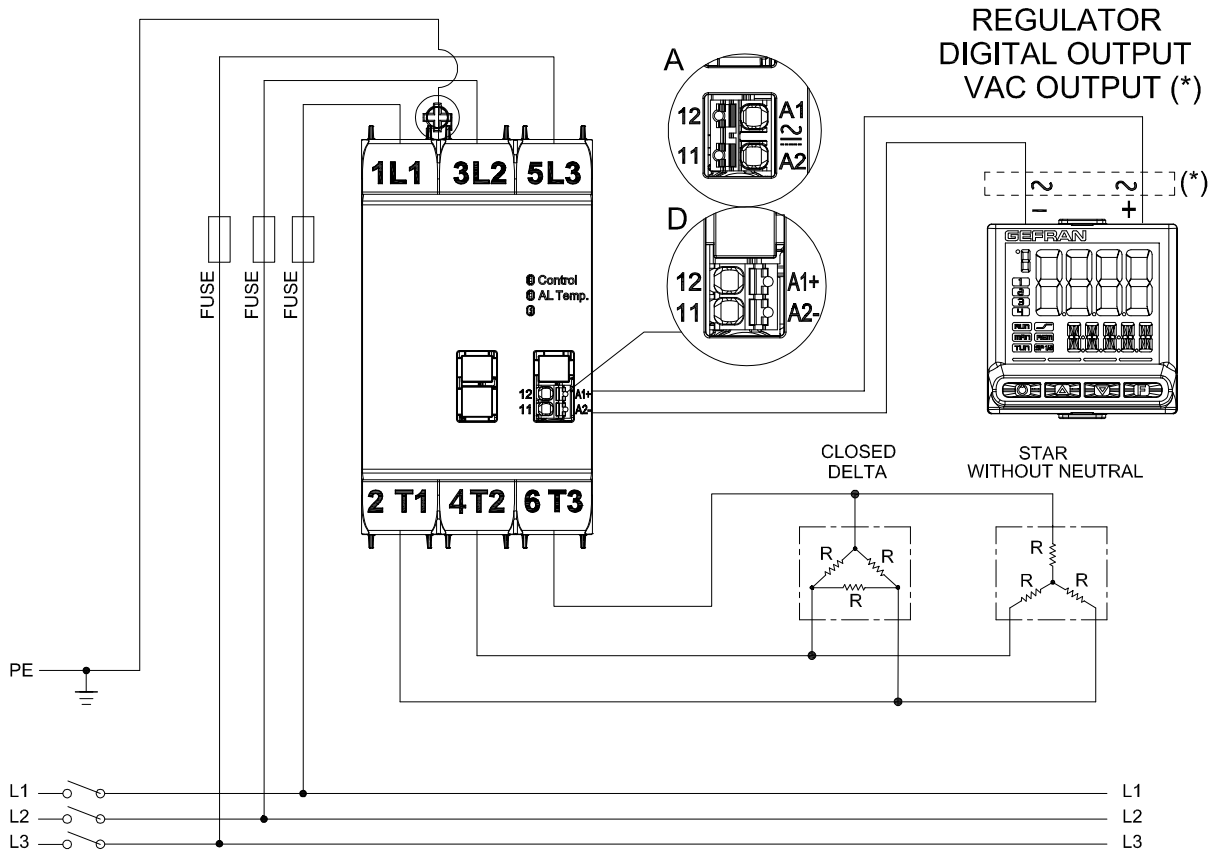


*Three-phase Wye connection with neutral - GRZ with V DC or AC command input ("D" or "A" type input).*
*Valid **ONLY** for models 3S (3PH, 3 controlled) models.*
***NOT FOR** GRZ 2S type (3ph, 2 leg controlled and 1 pass through)*

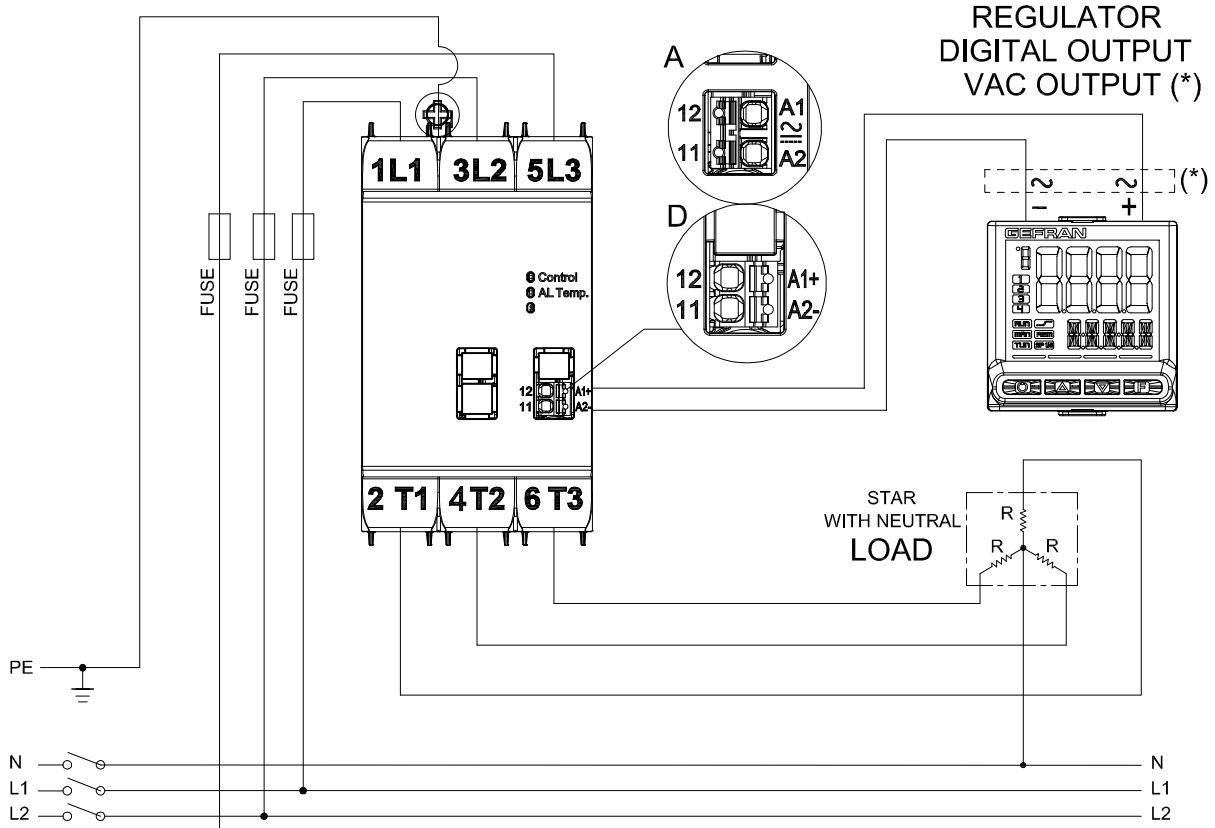

## *CONNECTION EXAMPLES*

*Open Delta connection with neutral - GRZ with V DC or AC command input ("D" or "A" type input).*
*Valid **ONLY** for models 3S (3PH, 3 controlled) models.*
***NOT FOR** GRZ 2S type (3ph, 2 leg controlled and 1 pass through)*

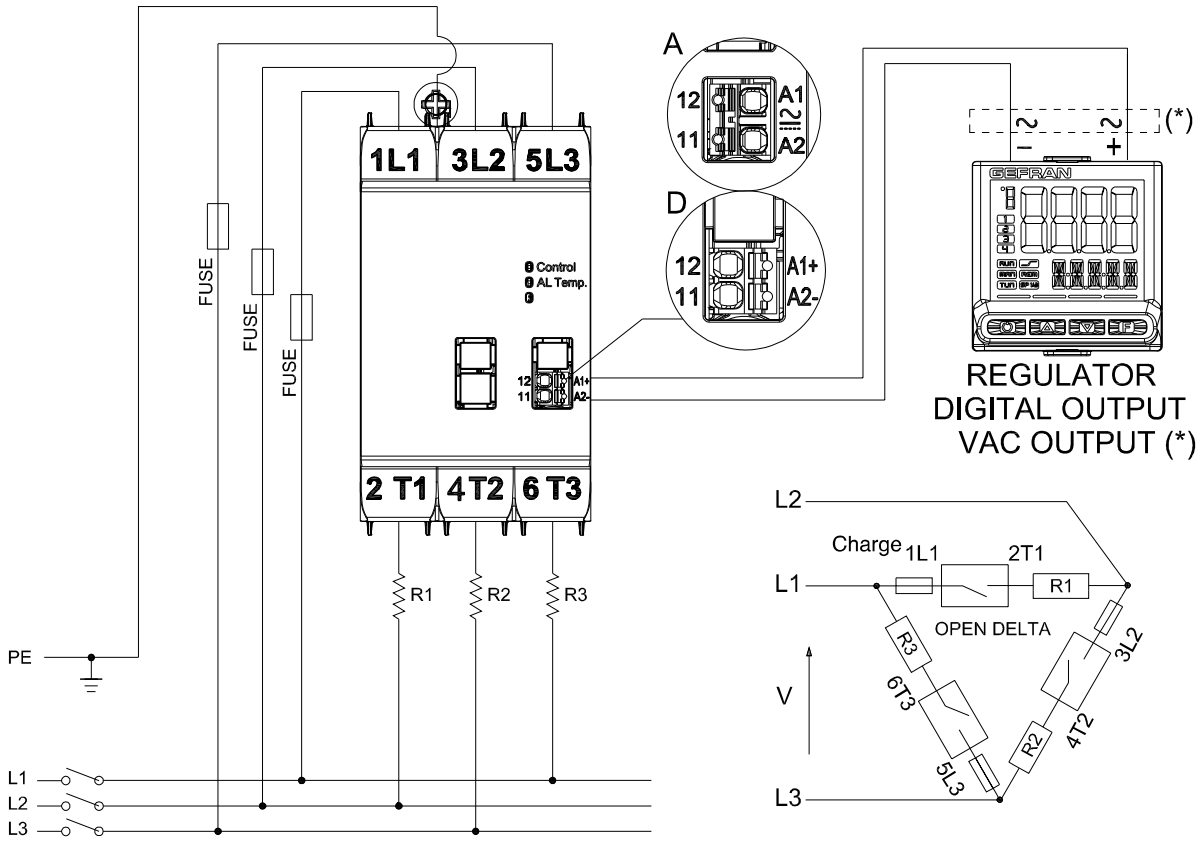

## *TABLE OF TERMINALS AND CONDUCTORS*

| POWER TERMINALS | | | | | | | |
|---|---|---|---|---|---|---|---|
| **Rated load current** | **10/15A** | **20/25A** | **30A** | **40A** | **50A** | **60/65A** | **75A** |
| **Contact area (WxD) screw type** | 9,2 x 8 mm M5 | | | | | | |
| **Stripping length** | 11 mm | | | | | | |
| **1 Conductor section** | 1 x 2.5 $mm^2$ / 2 x 1.5 $mm^2$ | 1 x 6 $mm^2$ / 2 x 4 $mm^2$ | | 1 x 10 $mm^2$ / 2 x 6 $mm^2$ | 1 x 16 $mm^2$ / 2 x 10 $mm^2$ | 1 x 25 $mm^2$ / 2 x 16 $mm^2$ | |
| **2 Conductors section (minimum section)** | 1 x 14 AWG / 2 x 17 AWG | 1 x 10 AWG / 2 x 12 AWG | | 1 x 8 AWG / 2 x 10 AWG | 1 x 6 AWG / 2 x 8 AWG | 1 x 4 AWG / 2 x 6 AWG | 1 x 3 AWG / 2 x 6 AWG |
| **Maximum allowed section** | 1 x 25 $mm^2$ /2 x 16 $mm^2$ 1 x 3 AWG /2 x 6 AWG | | | | | | |
| **Tightening torque** | 2,5-3 Nm (22-26,6lb-in) | | | | | | |
| *Note: Use 75°C (167°F) copper (CU), multi-stranded conductors* | | | | | | | |

| **CONTROL/SIGNAL TERMINALS** Rigid/flexible / cable lug conductor cross section | |
|---|---|
| **1 Conductor section 2 Conductors section** | 1 x 0.2-0.75 $mm^2$ 2 x 0.1-0.5 $mm^2$ |
| | 1 x 24-18 AWG 2 x 27-20 AWG |
| **Stripping length** | 8 mm |
| Nota: Usare conduttori in rame (CU) 60/75°C (140/167°F), rigidi o multifilari | |

| **GROUND TERMINAL (*)** | |
|---|---|
| **Contact area (WxD) screw type** | 9 x 9 mm M5 |
| **Tightening torque** | 1,5-2,5 Nm (13.3 lb-in – 22 lb-in) |

(*) The screw terminals are only suitable for on-site wiring connection when the wire is equipped with a tube terminal with eyelet.
It is possible to make ground connection using a copper bar suitably ground connected and fixed to the heatsink of more GRZ-H.

## *EXTRARAPID FUSES*

| GRZ Model | Nominal current | Model and fuse size (manufacturer Bussmann Div Cooper (UK) Ltd) | Fuse order code (descr.) | Fuse holder order code (descr.) |
|---|---|---|---|---|
| 10 | 10 | FWC-10A10F 10x38 | 338238 (FUS-010-L) | 337132 (PF-10x38) |
| 15 | 16 | FWC-16A10F 10x38 | 338470 (FUS-016) | |
| 20,20I | 20 | FWC-20A10F 10x38 | 338469 (FUS-020) | |
| 25,25I | 25 | FWC-25A10F 10x38 | 338474 (FUS-025) | |
| 30,30I | 32 | FWC-32A10F 10x38 | 338483 (FUS-032) | |
| 40,40I | 40 | FWP-40A14F 14x51 | 338147 (FUS-040) | 337131 (PF-14x51) |
| 50 | 50 | FWP-50A14F 14x51 | 338079 (FUS-051) | |
| 65 | 63 | FWP-63A22F 22x58 | 338191 (FUS-063) | 337130 (PF-22x58) |
| 75 | 80 | FWP-80A22F 22x58 | 338199 (FUS-080) | |

## *PROTECTION WITH MCB*

| **Protection co-ordination (Type 2) with Siemens Miniature Circuit Breaker (MCB / Thermal-Magnetic) 5SY4 series, curve A, 3P** | | | |
|---|---|---|---|
| **Current size model (I2t)** | **3P MCB model (MCB Nominal current in A) at 400Vac** | **Wire cross sectional area (mm2)** | **Minimum length *of copper wire conductor (m)** |
| GRZ(-H)-… 2S-15 2S-25 2S-30 3S-10 3S-20 3S-25 3S-40 (1800 A2s) | 5SY4310-5 (10) | 1,0 | 6,0 |
| | | 1,5 | 10,0 |
| | | 2,5 | 14,0 |
| | 5SY4316-5 (16) | 1,0 | 6,0 |
| | | 1,5 | 10,0 |
| | | 2,5 | 14,0 |
| | | 4,0 | 25,0 |
| | 5SY4320-5 (20) | 1,5 | 10,0 |
| | | 2,5 | 21,0 |
| | | 4,0 | 30,0 |
| | 5SY4325-5 (25) | 2,5 | 18,0 |
| | | 4,0 | 30,0 |
| | 5SY4332-5 (32) | 2,5 | 36,0 |
| GRZ(-H)-… 2S-25I 2S-30I 2S-40I 2S-50 2S-75 3S-20I 3S-25I 3S-30I 3S-40I 3S-65 (12800 A2s) | For MCBs smaller than those indicated in the lines below, there are no section and length constraints. | | |
| | 5SY4332-5 (32) | 2,5 | 2,0 |
| | | 4,0 | 4,0 |
| | | 6,0 | 7,0 |
| | 5SY4340-5 (40) | 4,0 | 4,0 |
| | | 6,0 | 7,0 |
| | | 10,0 | 10,0 |
| | 5SY4350-5 (50) | 6,0 | 7,0 |
| | | 10,0 | 10,0 |
| | | 16,0 | 18,0 |
| | 5SY4363-5 (63) | 6,0 | 7,0 |
| | | 10,0 | 10,0 |
| | | 16,0 | 18,0 |

*The sizing is valid for a 400Vac phase-to-phase line with an assumed short-circuit current of 5KA
** Between MCB and Load plus return path which goes back to MCB.

Example, for a GRZ-H-…2S-50-…, with line voltage of 400Vac, controlled load of 45 A nominal for each leg, with a section of 6mm2 of cable, an MCB 5SY4350-5 (50 A) the minimum length of the cables is 7m (cable length is intended between MCB and load, including return to MCB).

## *COOLING FANS*

| **GRZ-H Model** | **Type of fan** | **Spare part code** |
|---|---|---|
| 3S-40, 3S-40I, 2S-40, 2S-50 | 24 Vdc 40mm x 40mm x 20mm | F095133 |
| 3S-65, 2S-75 | 24 Vdc 60mm x 60mm x 25mm | F095132 |

## *FAN REPLACEMENT*

*Caution: make sure that the arrow showing the direction of the air flow on the fan is pointing toward the heat sink*

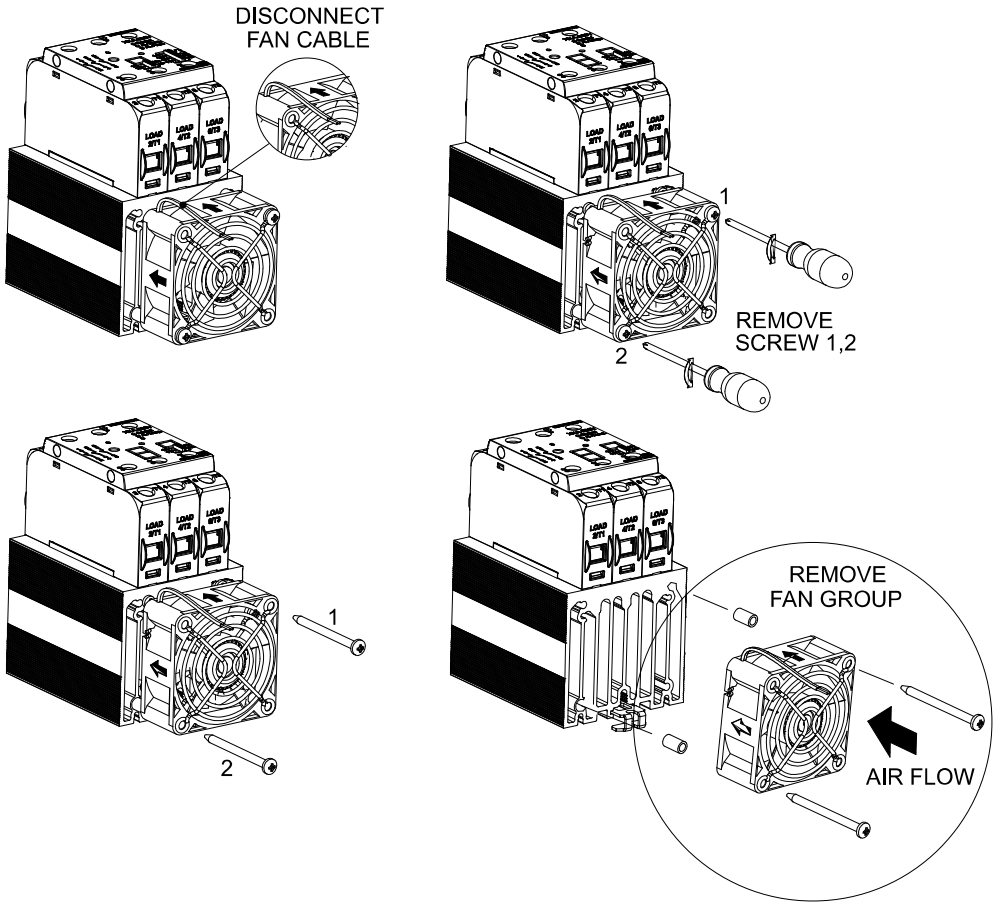


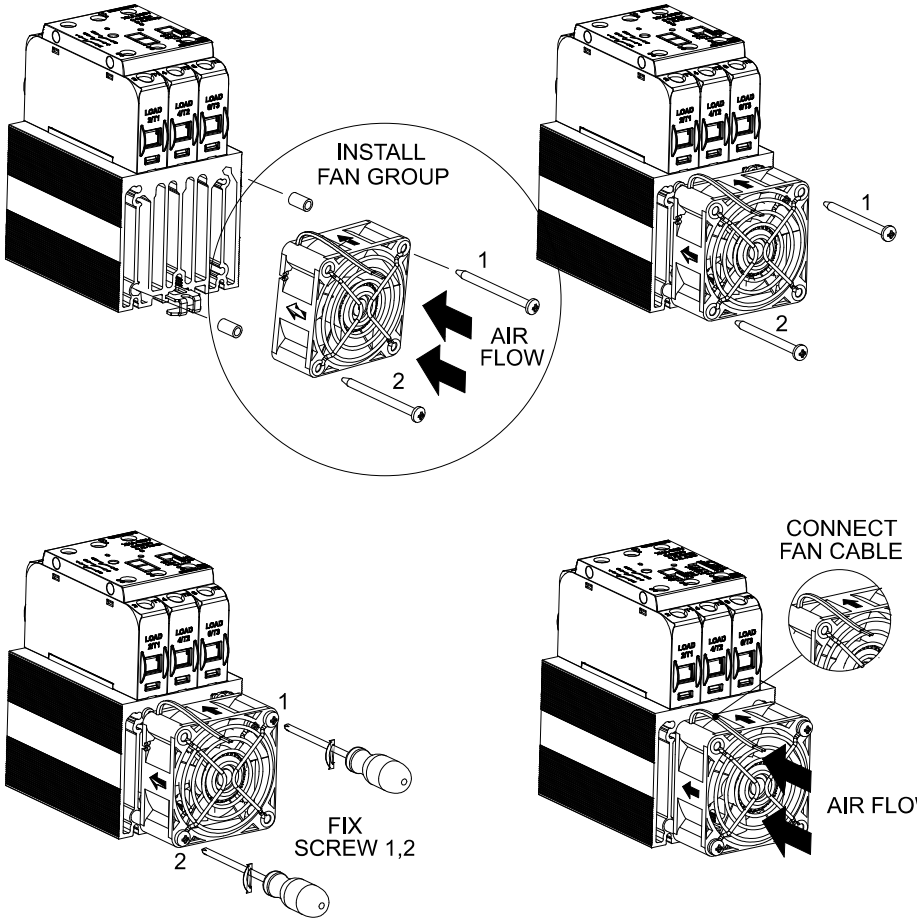

## *DERATING CURVES*

*Rated current curves as a function of ambient temperature (minimum distance between GRZ-H of 20mm).*

**DERATING CURVES GRZ-H-3P-2S**

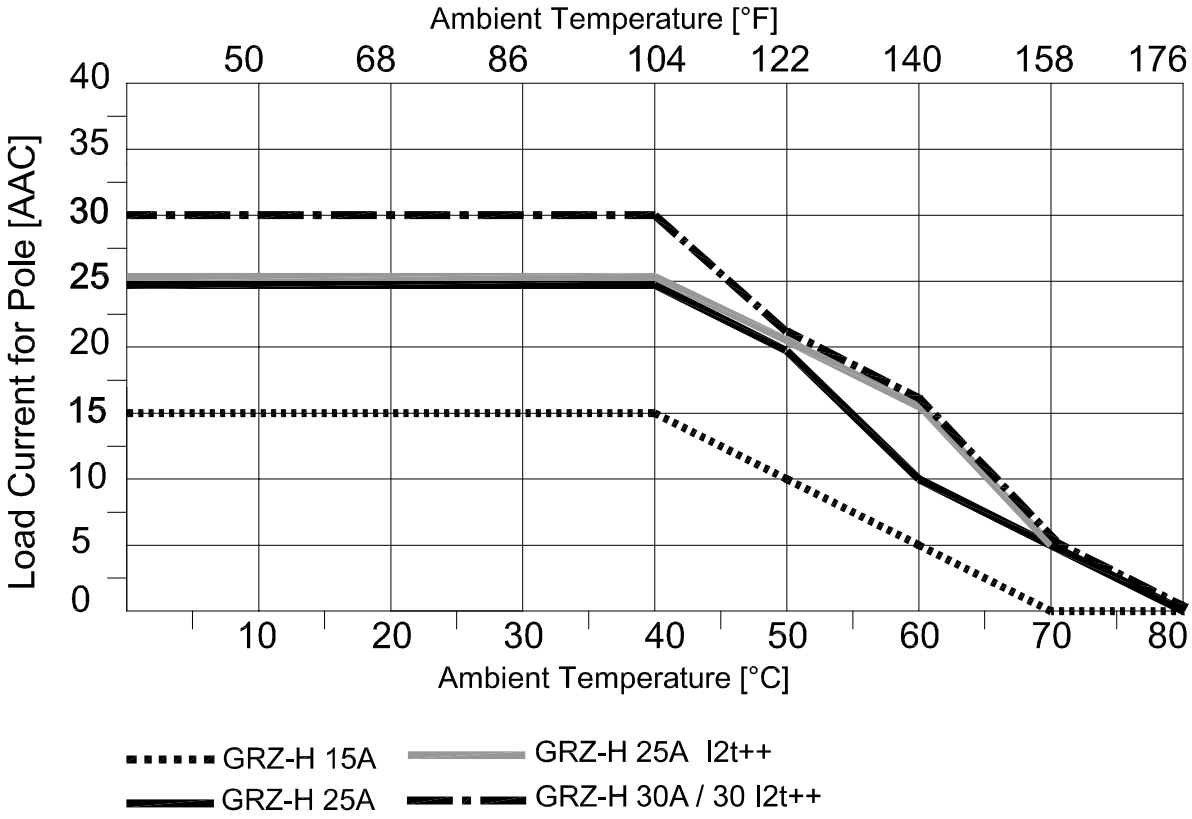


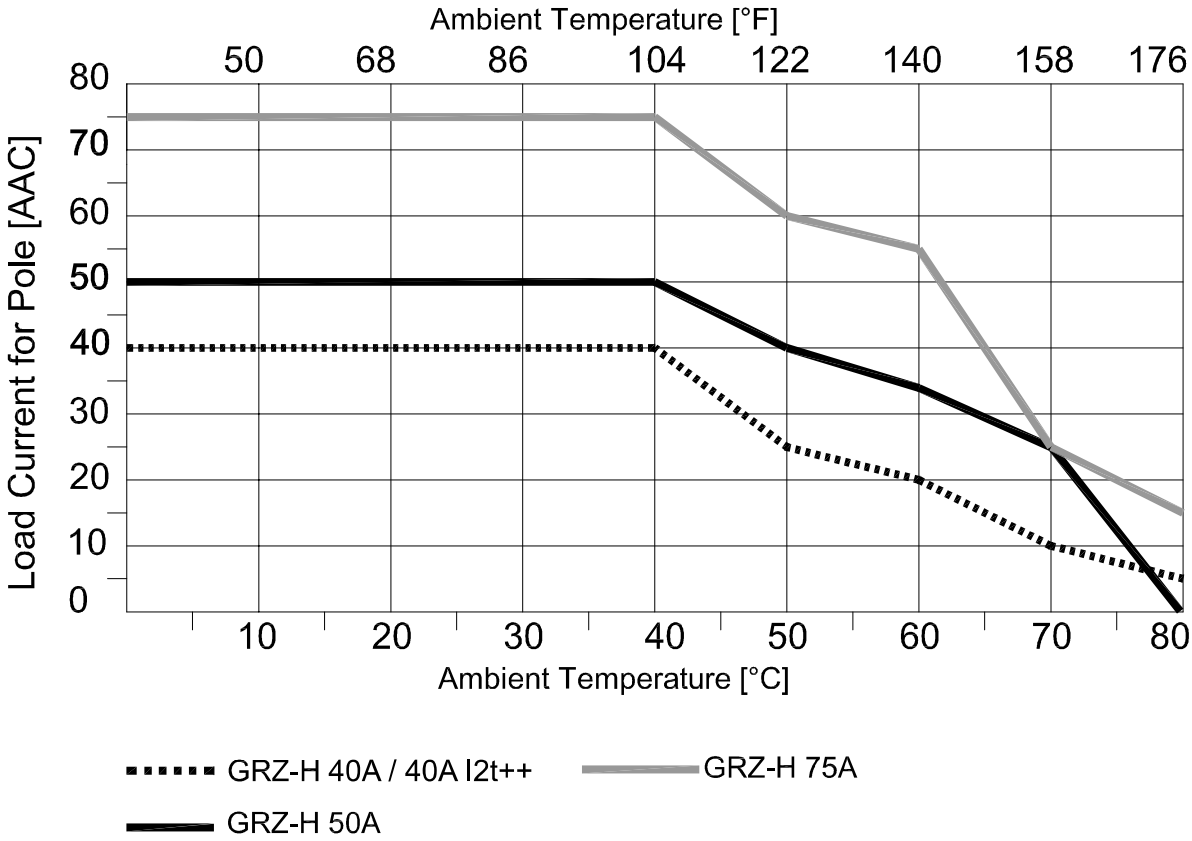


Note: The curves of the GRZ-H 50A/75A refer to the device complete with a working specified fan.

## *DERATING CURVES*

*Rated current curves as a function of ambient temperature (minimum distance between GRZ-H of 20mm).*

**DERATING CURVES GRZ-H-3P-3S**

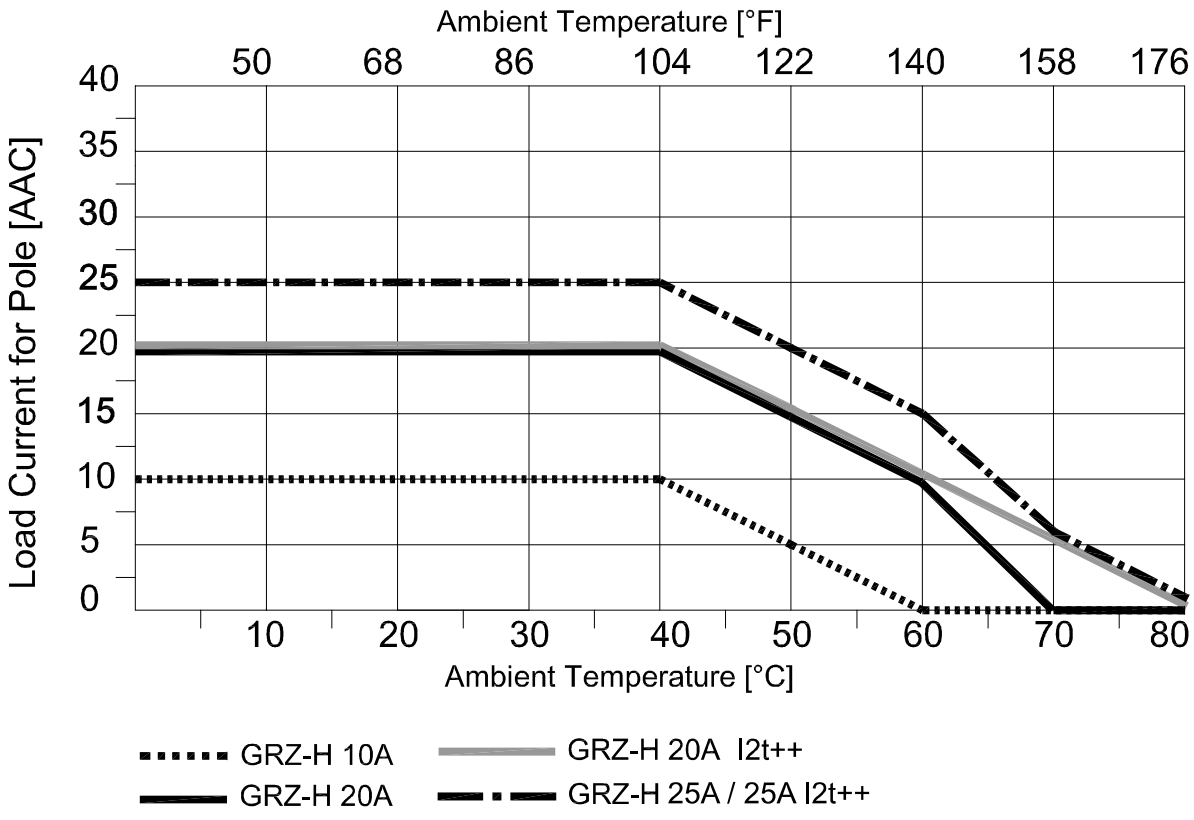


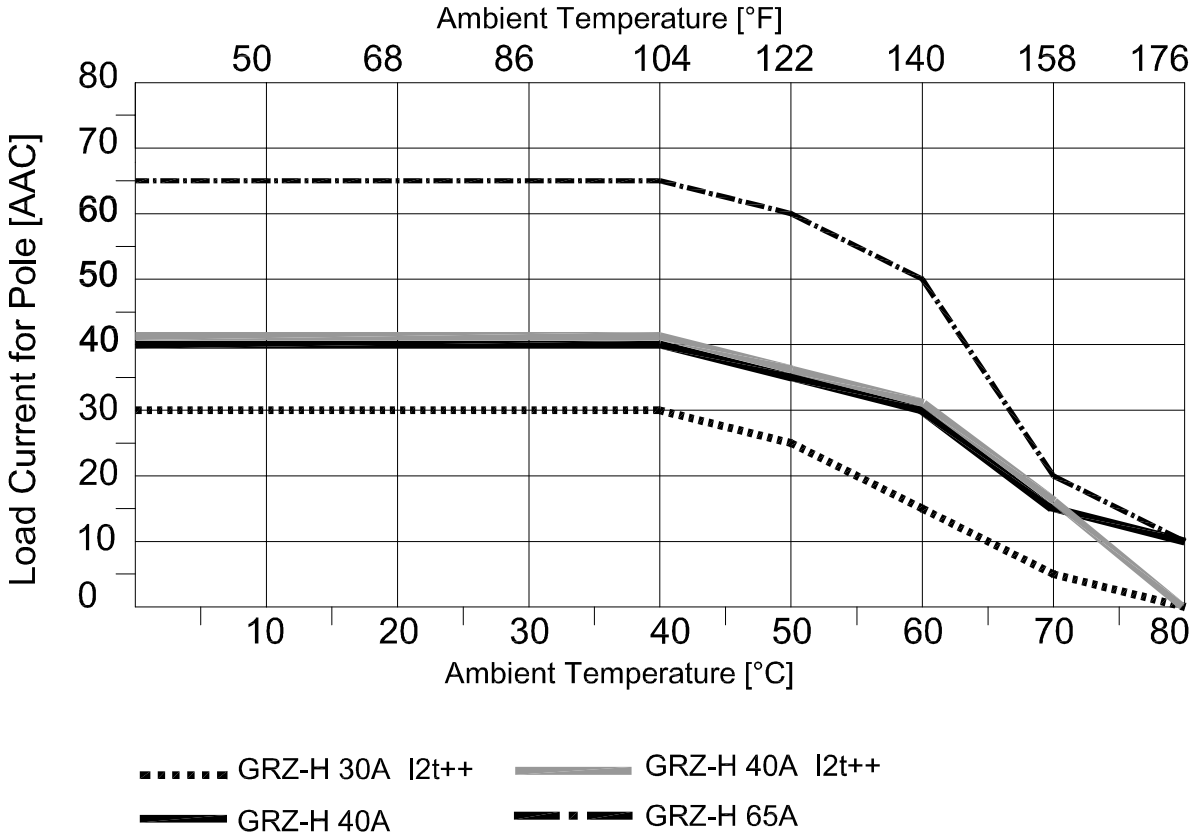


Note: The curves of the GRZ-H 40A/ 65A refer to the device complete with a working standard fan

## ORDER CODE

| GRZ-H-3P | - | - | - | - | - | - | 0 |
|---|---|---|---|---|---|---|---|

| | |
|---|---|
| 0 | |

| Controlled phases | |
|---|---|
| 3PH, 2 controlled 1 direct | **2S** |
| 3PH, 3 controlled | **3S** |

| Nominal current | |
|---|---|
| **for 2S (3PH, 2 controlled 1 direct) models** | |
| 15Aac | **15** |
| 25Aac | **25** |
| 25Aac I2t++ | **25I** |
| 30Aac | **30** |
| 30Aac I2t++ | **30I** |
| 40Aac I2t++ | **40I** |
| 40Aac (Fan required) | **40** |
| 50Aac (Fan required) | **50** |
| 75Aac (Fan required) | **75** |
| **for 3S (3PH, 3 controlled) models** | |
| 10Aac | **10** |
| 20Aac | **20** |
| 20Aac I2t++ | **20I** |
| 25Aac | **25** |
| 25Aac I2t++ | **25I** |
| 30Aac I2t++ | **30I** |
| 40Aac (Fan required) | **40** |
| 40Aac I2t++ (Fan required) | **40I** |
| 65Aac (Fan required) | **65** |

| Nominal voltage | |
|---|---|
| 480 Vac | **48** |
| 600 Vac | **60** |

| Fan | |
|---|---|
| **Models not requiring a fan** (See Nominal current table) | |
| **0** | None |
| **Models requiring a fan** (See Nominal current table) | |
| **FAN62** | 24Vdc |
| **FAN63** | 24Vdc Smart Fan (1) |
| **FAN64** | 115..230Vac Smart Fan (2) |

| Diagnostic options (*) | |
|---|---|
| **0** | None |
| **1** | Thermal alarm and Load Diagnostic insulated contact ( NO ) (1) |
| **2** | Thermal alarm and Load Diagnostic insulated contact ( NC ) |
| **3** | Thermal alarm and Load Diagnostic Digital output PNP (1) |

| Control type | |
|---|---|
| **D** | 6 ... 32 Vdc |
| **A** | 20 ... 260 Vac / Vdc |

**Notes:**
(*) Over temperature protection always included
Load Diagnostic : No line voltage, Current fault.

(1) Not available for control type option A
(2) Not available for control type option D with Diagnostic options 1,2 or 3

## *EMC STANDARDS*

### *EMC emissions*

| | | |
|---|---|---|
| AC semiconductor motor controllers and conductors for non-motor loads | EN 60947-4-3 | Class A Group 2 |

### *EMC Immunity*

| | | |
|---|---|---|
| Generic standards, immunity standard for industrial environments | EN 60947-4-3 | |
| ESD immunity | EN 61000-4-2 | 4 kV contact discharge<br>8 kV air discharge |
| RF interference immunity | EN 61000-4-3 /A1 | 10 V/m amplitude modulated 80 MHz-1 GHz<br>10 V/m amplitude modulated 1.4 GHz-2 GHz |
| Conducted disturbance immunity | EN 61000-4-6 | 10 V/m amplitude modulated 0.15<br>MHz-80 MHz |
| Burst immunity | EN 61000-4-4 | 2 kV power line<br>2 kV I/O signal line |
| Surge immunity | EN 61000-4-4/5 | Power line-line 1 kV<br>Power line-earth 2 kV<br>Signal line-earth 2 kV<br>Signal line-line 1 kV |
| Magnetic fields immunity | Test are not required. Immunity is demonstrated by the successfully completion of the operating capability test | |
| Voltage dips, short interruptions and voltage immunity tests | EN 61000-4-11 | 100%U, 70%U, 40%U |

**LVD safety**

| | |
|---|---|
| Safety requirements for electrical equipment for measurement, control and laboratory use | EN 61010-1 |

***CAUTION***

This product has been designed for class A equipment. Its use in a domestic environment may cause radio interference, in which case the user may be required to use additional attenuation methods.

## *WARNINGS*

**WARNING**

***Read the following warnings before installing, connecting or using the device:***

- follow instructions precisely when connecting the device.
- always use cables that are suitable for the voltage and current levels indicated in the technical specifications.
- In applications with risk of damage to persons, machines or materials, you MUST install auxiliary alarm devices.
- It is advisable to verify frequently that the alarm device is functional even during the normal operation of the equipment.
- DO NOT operate the device in rooms with dangerous (inflammable or explosive) atmosphere.
- During continuous operation, the heat sink can reach up to 100°C, and stays at a high temperature even after the device is turned off due to thermal inertia; therefore, DO NOT touch it and avoid contact with electrical wires.
- do not work on the power part without first disconnecting electrical power to the panel.
- do not remove the cover when the device is powered!

***Installation:***

- correctly ground the device using the specific terminal.
- power supply lines must be separated from device input and output lines; always check that the supply voltage matches the voltage indicated on the device label.
- avoid dust, humidity, corrosive gases and heat sources.
- respect the installation distances between one device and another (to allow for dissipation of generated heat).
- to keep air in movement, we advise you to install a fan near the GRZ-H group in the electrical panel containing the GRZ-H.
- respect the indicated dissipation curves

***Maintenance:***

at regular intervals, check operation of the cooling fans and clean all air ventilation filters.

- repairs must be done out only by trained and specialized personnel. Cut power to the device before accessing internal parts.
- do not clean the box with solvents derived from hydrocarbons (trichloroethylene, gasoline, etc.). Using such solvents will compromise the device's mechanical reliability. Use a clean cloth moistened with ethyl alcohol or water to clean external parts in plastic.

***Service:***

GEFRAN has a service department. The warranty excludes defects caused by any use not conforming to these instructions.

**GEFRAN spa** reserves the right to make aesthetic or functional changes at any time and without notice.

| | |
|---|---|
| CE | This device conforms to European Union Directive 2014/30/EU and 2014/35/EU as amended with reference to generic standards: **EN 61000-6-2** (iammunity in industrial environment) **EN 61000-6-4** (emission in industrial environment) - **EN 61010-1** (safety regulations). |
| c UL us LISTED | cULus listed, Conformity UL508 - File: E243386 |