

Page 2-4

THREE-POLE CONTACTORS

- IEC Ith ratings in AC1 duty at ≤40°C: 16 to 1600A
- IEC Ie ratings in AC3 440V duty: 6 to 630A
- IEC Power ratings in AC3 400V duty: 2.2 to 335kW
- UL/CSA ratings: 3 to 500HP at 480V and 600V
- AC, AC/DC, DC and DC low-consumption coil.



Page 2-8

FOUR-POLE CONTACTORS

- IEC Ith ratings in AC1 duty at ≤40°C: 20 to 1600A
- IEC Power ratings in AC1 400V duty: 14 to 950kW
- UL/CSA general use: 16 to 1000A
- AC, AC/DC, DC and DC low-consumption coil.



Page 2-12

FOUR-POLE CONTACTORS WITH 2NO+2NC MAIN POWER POLES

- IEC Ith ratings in AC1 duty at ≤40°C: 20 to 115A
- UL/CSA general use: 20 to 115A
- AC, AC/DC, DC and DC low-consumption coil.



Page 2-13

FOUR-POLE CONTACTORS WITH 4 NC POLES FOR PHOTOVOLTAIC APPLICATIONS

- IEC Ith ratings in AC1 duty at ≤40°C: 25 to 40A
- UL/CSA general use: 20 to 55A for 4NC types
- Operational current up to 125A (DC1 at ≤55°C with 4 NO poles in series) for photovoltaic applications.
- AC, AC/DC, DC and DC low-consumption coil.



Page 2-14

CONTACTORS FOR POWER FACTOR CORRECTION

- With limiting resistors included
- IEC Power ratings at 400V: 7.5 to 75kvar
- UL/CSA ratings: 9 to 80kvar at 480V; 10 to 100kvar at 600V
- AC coil.



Page 2-15

CONTROL RELAYS

- AC, DC and DC low-consumption coil
- Screw or Faston termination
- 4, 8 or 11 auxiliary contact composition.

IE3 READY

LOVATO Electric contactors are suitable for new motors with high IE3 efficiency values

Contactors



- Three-pole versions up to 630A in IEC AC3 duty
- Four-pole versions up to 1600A in IEC AC1 duty
- Versions for power factor correction up to 75kvar at 400VAC
- Four-pole versions with 2NO+2NC or 4NC main poles
- Versions for photovoltaic application
- Versions with AC, AC/DC or DC control
- Low-consumption versions with DC control circuit for control relays and 9-38A contactors in IEC AC3 duty
- Extensive choice of add-on blocks and accessories
- Certified by primary international authorities.

Sec. - Page

Contactors

Three-pole ..... 2 - 4
Four-pole ..... 2 - 8
Four-pole with 2NO and 2NC poles or 4NC poles ..... 2 - 12
Four-pole with 4NO poles for photovoltaic applications ..... 2 - 13
For power factor correction ..... 2 - 14
Control relays ..... 2 - 15

Add-on blocks and accessories

For BG series mini-contactors ..... 2 - 16
For BF series contactors ..... 2 - 18
For B series contactors ..... 2 - 26

Spare parts

AC coils for BF series contactors ..... 2 - 28
AC/DC and DC coils for BF series contactors ..... 2 - 29
AC/DC coils for B series contactors ..... 2 - 30
Main contacts for BF series contactors ..... 2 - 31
Main contacts and arc chutes for B series contactors ..... 2 - 31

Dimensions ..... 2 - 32
Wiring diagrams ..... 2 - 44
Technical characteristics ..... 2 - 48

2

BG series mini-contactors



- Highly conductive auxiliary contacts with four contact points
- AC and DC versions of same size
- Quick connect - snap on accessory mounting
- Distinct contact status indication
- Up to four auxiliary contacts can be mounted
- Mechanical interlock only 5mm deep
- Positive (force) guided contacts (mechanically-linked per IEC)

- Three-pole mini-contactors, 6 to 12A IEC AC3 duty / 3 to 7.5HP 480V - 3 to 10HP 600V UL/CSA
- Four-pole mini-contactors, 20A IEC AC1 duty
- Versions with 2NO+2NC main power poles
- Highly conductive auxiliary contacts
- Coils with AC or DC supply
- Low-consumption DC versions
- Screw, faston and rear PCB solder pin termination.

	3 poles			4 poles		
	Ie (AC3)	AC	DC	Ith (AC1)	AC	DC
BG06	6A	●	●	—	—	—
BG09	9A	●	●	20A	●	●
BGF09	9A	●	●	20A	●	●
BGP09	9A	●	●	20A	●	●
BG12	12A	●	●	—	—	—

BF series contactors



- Highly conductive auxiliary contacts with four contact points
- Quick connect - snap on accessory mounting
- Distinct contact status indication
- Up to four auxiliary contacts can be mounted
- Mechanical interlock only 5mm deep
- Positive (force) guided contacts (mechanically-linked per IEC)

- Three-pole contactors, 9 to 110A IEC AC3 duty / 5 to 75HP 480V - 7.5 to 100HP 600V UL/CSA
- Four-pole contactors, 25 to 125A in AC1 duty
- Power factor correction contactors, 7.5 to 75kvar at 400V IEC / 9 to 80kvar at 480V UL/CSA
- Types with 2NO+2NC or 4NC main power poles
- Types for photovoltaic applications
- Highly conductive auxiliary contacts
- Coils with AC or DC supply
- Wide-range coils with electronic control for contactors from 40 to 80A AC3
- Low-consumption versions for control relays and 9-38A contactors in IEC AC3 duty.

	3 poles				
	Ie AC3	AC	DC	DC❶	AC/DC❷
BF09	9A	●	●	●	—
BF12	12A	●	●	●	—
BF18	18A	●	●	●	—
BF25	25A	●	●	●	—
BF26	26A	●	●	●	—
BF32	32A	●	●	●	—
BF38	38A	●	●	●	—
BF40	40A	●	—	—	●
BF50	50A	●	—	—	●
BF65	65A	●	—	—	●
BF80	80A	●	—	—	●
BF95	95A	●	●	—	—
BF110	110A	●	●	—	—

	4 poles				
	Ith AC1	AC	DC	DC❶	AC/DC❷
BF09	25A	●	●	●	—
BF12	28A	●	—	—	—
BF18	32A	●	●	●	—
BF26	45A	●	●	●	—
BF38	56A	●	●	●	—
BF40	70A	●	—	—	—
BF50	90A	●	—	—	—
BF65	100A	●	—	—	●
BF80	115A	●	—	—	●

❶ Low-consumption version.
❷ Wide-range coil with electronic control.

B series contactors



- 3 frame sizes offering 11 different contactors
- Coil operates indifferently on AC or DC supply voltage
- Coil with low in-rush and holding
- Coil removable without disconnecting power wiring
- Red indicator when contactor is energised
- Unique right-angle magnet design - limits contact bounce
- Safety feature prevents contactor to be energised without arc chute in place and locked
- Convertible auxiliary contact block (2NO + 1NC or 1NO + 2NC), maximum of 4 blocks per contactor for a total of 12 contacts
- Contactor terminals with bolt, washer and nut
- Simple horizontal or vertical interlock
- Positive (force) guided contacts (mechanically-linked per IEC)

- Three-pole contactors, 110 to 630A IEC AC3 duty
- Four-pole contactors, 160 to 1600A IEC AC1 duty
- 100 to 500HP 600V UL/CSA
- Coils with AC/DC supply
- Screw termination.

	3 poles			4 poles		
	Ie (AC3)	AC	DC	Ith (AC1)	AC	DC
B115	110A	●	●	160A	●	●
B145	150A	●	●	250A	●	●
B180	185A	●	●	275A	●	●
B250	265A	●	●	350A	●	●
B310	320A	●	●	450A	●	●
B400	420A	●	●	550A	●	●
B500	520A	●	●	700A	●	●
B630	630A	●	●	800A	●	●
B630 1000	❶	●	●	1000A	●	●
B1250	❶	●	—	1250A	●	—
B1600	❶	●	—	1600A	●	—

❶ For AC1 / general use duty only.

THE IDEAL SOLUTION!

45mm WIDE CONTACTORS
Ratings up to 38A - 18.5kW IEC AC3 / 30HP UL - merely 45mm wide: exceptional benefit for electric panel dimensions.

55mm WIDE CONTACTORS
Up to 80A in AC3 (45kW) with a width of just 55mm.

COILS WITH WIDE OPERATING RANGE
BF...D contactors are equipped with a wide operating range coil and are particularly useful in applications subject to considerable voltage variations, such as in electric traction railway equipment.



4-TERMINAL COIL
Connecting cables can be coupled to the coil both on the line and load ends of the contactor.



ELECTRONIC COIL
Contactors from 40 to 80A AC3 can be equipped with AC/DC electronic coil with wide operating range.
Example: single 100 to 250V AC/DC coil.

BUILT-IN SURGE SUPPRESSOR
BF series contactors up to 80A AC3 with voltages in DC or AC/DC already have a built-in surge suppressor.

LOW-CONSUMPTION COILS
The BF...L contactors feature a 2.4W low consumption. This characteristic widely allows their direct control by PLC outputs.

SIDE ADD-ON FOURTH POLE

For the 45A to 115A AC1 ratings, a side-mount fourth power pole can be snapped on the three-pole contactor.
This solution permits to optimise inventory.

MECHANICAL INTERLOCK

Smaller-size contactors, 9 to 25A in AC3, can be mechanically and electrically interlocked with larger-size contactors, 26 to 38A AC3.
The BFX50 01 and BFX53 01 mechanical interlock comprises two built-in NC auxiliary contacts to make the electrical interlock as well.

35MM IN RAIL MOUNTING AND FIXING
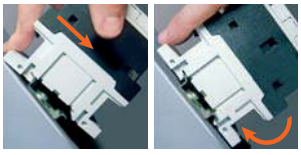
Contactor mounting on and removal from a 35mm DIN rail are tool-less operations and are done by simply applying pressure on the contactor.

STARTER ASSEMBLY

The assembly and wiring of electromechanical starters is extremely fast and reliable. Versatile electrical and mechanical connecting systems provide easy and foolproof assembly of compact starters.

EFFORTLESS THERMAL OVERLOAD RELAY LINK RF38 AND RF82 TYPES
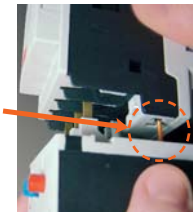
During the connection of the thermal overload relay to the contactor, its auxiliary contact is simultaneously linked to the contactor coil terminal rigid connector.
The complete overload relay fixing is obtained with one single operation and without other connections.

TERMINAL ADAPTABILITY
Terminals are suitable for every type of cable: flexible, rigid, according to AWG standards and interlocked with any type of cable terminal.
For BF09...BF38 contactors, a single type of screwdriver tightens the screws for the power contacts, auxiliary contacts and coil.

SNAP-ON INSTALLATION
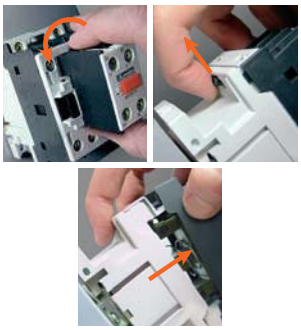
On the contactors, it's quick and easy to fit and remove auxiliary contacts and accessories, without using tools; the same applies to replacing the coil in the AC BF09…BF38 contactors.

RUBBER PAD INSERT FOR NO DIN RAIL SLIDING
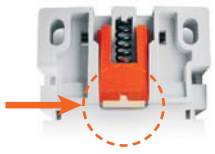
A rubber insert prevents the contactors from sliding on the 35mm DIN rail even when out of tolerance or mounted vertically.

BREAKER-CONTACTOR CONNECTIONS

The rigid connections between breaker and contactor allow complete compact starters to be created easily, quickly and with less space used in the panel.
It is fitted on a single DIN rail.

IP20 CONNECTION SECURITY

For BF09...BF38 contactors, the easy access and space for the terminals is combined with IP20 protection, preventing accidental contact with live parts.

DOUBLE LUG TERMINALS
40 to 80A AC3 contactors are equipped with double lug terminals for easy, functional access for power cables.
It is extremely simple to create star-delta starters, reversing switches, changeovers and arrange parallel supply for several contactors.




BG06 A…BG12 A


BF09 A…BF25 A


BF26 A…BF38 A



BF40 A…BF80 A


BF95…BF110


B115…B180


B250…B400

	Three-phase motor control in AC3 duty											UL/CSA details					
Order code	IEC operating current Ith (AC1)			Ie (AC3)	Maximum IEC power at ≤55°C (AC3)							Maximum UL/CSA horsepower ratings Single phase		Three phase			
AC coil	≤40°C	≤55°C	≤70°C	≤440V at ≤55°C	230V	400V	415V	440V	500V	690V	1000V	120V	240V	200V	240V	480V	600V
[A]	[A]	[A]	[A]	[A]	[kW]	[kW]	[kW]	[kW]	[kW]	[kW]	[kW]	[HP]	[HP]	[HP]	[HP]	[HP]	[HP]
11 BG06 01 A❶	16	14	12	6	1.5	2.2	2.4	2.5	3	3	—	1/3	1	1 1/2	2	3	3
11 BG06 10 A❶																	
11 BG09 01 A❶	20	18	15	9	2.2	4	4.3	4.5	5	5	—	1/2	1 1/2	2	3	5	5
11 BG09 10 A❶																	
11 BGF09 01 A❶	20	18	15	9	2.2	4	4.3	4.5	5	5	—	1/2	1 1/2	2	3	5	5
11 BGF09 10 A❶																	
11 BGP09 01 A❶	20	18	15	9	2.2	4❼	4.3❼	4.5❼	5❼	—	—	1/2	1 1/2	2	3	5❼	—
11 BGP09 10 A❶																	
11 BG12 01 A❶⓬	20	18	15	12	3.2	5.7	6.2	5.5	5	5	—	1/2	1 1/2	3	3	7 1/2	10
11 BG12 10 A❶⓬																	
BF09 01 A❶⓬	25	20	18	9	2.2	4.2	4.5	4.8	5.5	7.5	—	3/4	2	3	3	5	7 1/2
BF09 10 A❶⓬																	
BF12 01 A❶⓬	28	23	20	12	3.2	5.7	6.2	6.2	7.5	10	—	1	2	5	5	7 1/2	10
BF12 10 A❶⓬																	
BF18 01 A❶⓬	32	26	23	18	4	7.5	9	9	10	10	—	1	3	5	5	10	15
BF18 10 A❶⓬																	
BF25 01 A❶	32	26	23	25	7	12.5	13.4	13.4	15	11	—	2	3	7 1/2	7 1/2	15	15
BF25 10 A❶																	
BF26 00 A❶⓬	45	36	32	26	7.3	13	14	14	15.6	18.5	—	2	5	7 1/2	7 1/2	15	20
BF32 00 A❶⓬	56	45	40	32	8.8	16	17	17	20	22	—	3	7 1/2	10	10	20	25
BF38 00 A❶	56 (60⓾)	45 (48⓾)	40 (42⓾)	38	11	18.5	18.5	18.5	20	22	—	3	7 1/2	10	15	30	30
BF40 00A ❶	70	60	50	40	11	18.5	22	22	22	30	18	3	7 1/2	10	15	30	40
BF50 00A ❶⓬	90	75	60	50	15	22	30	30	30	37	22	5	10	10	15	30	40
BF65 00A ❶⓬	100	80	65	65	18.5	30	37	37	37	45	30	—	—	20	25	50	60
BF80 00A ❶	115	95	75	80	22	45	45	45	55	75	37	—	—	25	30	60	75
11 BF95 00❶	125	100	80	95	27.6	50	55	55	56	74	45	—	—	30	30	60	75
11 BF110 00❶	125	100	80	110	33	61	66	70	59	80	45	—	—	30	40	75	100
11 B115 00❷❸	160	150	110	110	33	61	66	70	80	100	63	—	—	30	40	75	100
11 B145 00❷❸	250	235	190	150	46	80	88	93	100	120	75	—	—	50	50	100	125
11 B180 00❷❸	275	250	200	185	57	100	108	115	123	144	103	—	—	60	75	150	150
11 B250 00❷❸	350	300	250	265	83	140	155	164	176	212	156	—	—	75	100	200	250
11 B310 00❷❺	450	370	300	320	100	170	188	200	213	256	180	—	—	100	125	250	300
11 B400 00❷❸	550	430	360	420	130	225	247	263	271	352	208	—	—	125⓫	150⓫	350⓫	400⓫
11 B500 00❷❸	700	550	500	520	156	290	306	328	367	416	312	—	—	150⓫	200⓫	400⓫	450⓫
11 B630 00❷❸	800	640	540	630	198	335	368	368	368	440	368	—	—	200	250	500	500
11 B630 1000 00❷❺	1000	850	700	—	For AC1/Resistive duty only, see page 2-8.							—	—	—	—	—	—
11 B1250 24❺❻	1250	1050	880	—	For AC1/Resistive duty only, see page 2-8.							No UL	—	—	—	—	—
11 B1600 24❺❻	1600	1360	1120	—	For AC1/Resistive duty only, see page 2-8.							No UL	—	—	—	—	—

❶ Complete order code with coil voltage digit or with voltage digit followed by 60 (if 60Hz).
Standard voltages are as follows:
– AC 50/60Hz 024 / 048 / 110 / 230 / 400V
– AC 60Hz 024 60 / 048 60 / 120 60 / 220 60 / 230 60 / 460 60 / 575 60 (V).
Example: 11 BG06 10 A230 for mini-contactor BG06, three poles, with one NO contact and 230VAC 50/60Hz coil.
11 BG06 10 A460 60 for mini-contactor BG06 with one NO contact and 460VAC 60Hz coil.

❷ The coil of the contactor can be powered indifferently in AC or DC. Complete the order code only with the digit of the coil voltage. Standard voltages are:
– AC/DC 24 / 48 / 60 / 110-125 (indicate 110) / 220-240 (indicate 220) / 380-415 (indicate 380) / 440-480V (indicate 440).
Example: 11 B145 00 110 for contactor B145, three poles, without auxiliary contacts and with 110-125VAC/DC coil.
The 24VAC/DC voltage is not possible for B500-B630 1000 contactors.
The 24VAC/DC voltage is not possible for B500-B630 1000 contactors.
Other voltages available on request.

❸ If predisposed for mechanical latch (G495), the order code becomes 11 B…SL.00 ❷
If already fitted with mechanical latch (G495), the order code becomes 11 B…L.00 ❷ ❹.

❹ Indicate rated voltage of the mechanical latch, preceded by the letter C if in DC. Available voltages are:
– AC 50/60Hz 48 / 110-125 indicate 110 / 220-240 indicate 220 / 380-415V indicate 380
– DC 48 / 110-125 indicate 110 / 220-240V indicate 220.
Example: 11 B145L 00 110 220 for contactor B145 without auxiliary contacts, with 110-125VAC/DC coil and mechanical latch powered at 220-240VAC.

❺ G495 mechanical latch cannot be mounted.

❻ Complete the order code with the digit of the coil voltage. For 110-125VAC (50/60Hz) indicate 110 or 220-240VAC (50/60Hz) indicate 220.
Example: 11 B1250 24 110 for contactor B1250, three poles, with 2NO+4NC auxiliary contacts and 110-125VAC 50/60Hz coil.

❼ Maximum voltage is limited at 300V for UL. For certified type up to 600V, consult Customer Service for information; see contact details on inside front cover.

❽ For voltages 024 / 230 / 400VAC 50-60Hz: 10 pieces/package.
For all other voltages: 1 piece/package.

❾ Highly conductive auxiliary contact.

❿ For use at this other current value, a 16mm² cable, headed with a fork terminal, must be used.

⓫ No UL/CSA ratings; data given for indication and reference purposes only.

⓬ Definite-purpose (DP) contactors are available. Consult Customer Service for information; see contact details on inside front cover.


B500-B630


B630 1000


B1250-B1600

	UL/CSA General (purpose) use	UL/CSA Fuse class	Short circuit current RMS sym. 600VAC	Type of terminal	Incorporated auxiliary contacts		Quantity per pkg	Weight
	[A]	Type/[A]	[kA] UL/CSA		NO	NC	n°	[kg]
	16	K5/30	5	Clamp-screw	—	1⓽	10	0.180
					1⓽	—	10	0.180
	20	K5/30	5	Clamp-screw	—	1⓽	10	0.180
					1⓽	—	10	0.180
	20	K5/30	5	Faston	—	1⓽	10	0.180
					1⓽	—	10	0.180
	20	K5/30	5	Rear PCB solder pin	—	1⓽	10	0.197
					1⓽	—	10	0.197
	20	K5/30	5	Clamp-screw	—	1⓽	10	0.180
					1⓽	—	10	0.180
	25	RK5/60	5	Clamp-screw	—	1⓽	1	0.367
					1⓽	—	⓼	0.367
	28	RK5/70	5	Clamp-screw	—	1⓽	1	0.367
					1⓽	—	⓼	0.367
	32	RK5/80	5	Clamp-screw	—	1⓽	1	0.367
					1⓽	—	⓼	0.367
	32	RK5/100	5	Clamp-screw	—	1⓽	1	0.367
					1⓽	—	⓼	0.367
	45	RK5/100	5	Clamp-screw	—	—	1	0.432
	55	RK5/125	5	Clamp-screw	—	—	1	0.432
	55	RK5/150	5	Clamp-screw	—	—	1	0.432
	70	RK5/150	10	Lug-clamp⓲	—	—	1	1.000
	90	RK5/200	10	Lug-clamp⓲	—	—	1	1.000
	100	RK5/225	10	Lug-clamp⓲	—	—	1	1.000
	115	RK5/250	10	Lug-clamp⓲	—	—	1	1.000
	125	RK5/250	10	Lug-clamp⓲	—	—	1	1.360
	125	RK5/250	10	Lug-clamp⓲	—	—	1	1.360
	160	RK5/500	5	Screw-nut	—	—	1	5.290
	250	RK5/500	5	Screw-nut	—	—	1	5.400
	275	RK5/500	10	Screw-nut	—	—	1	5.400
	350	L/800	18	Screw-nut	—	—	1	9.575
	450	L/800	18	Screw-nut	—	—	1	9.575
	550	L/800 ⓫	18⓫	Screw-nut	—	—	1	9.575
	700	L/1200 ⓫	18⓫	Screw-nut	—	—	1	18.000
	800	L/1500 ⓫	18⓫	Screw-nut	—	—	1	18.620
	1000	L/1500	18	Screw-nut	—	—	1	21.400
	No UL	—	—	Screw-nut	2	4	1	48.000
	No UL	—	—	Screw-nut	2	4	1	50.000

⓲ IEC/EN 60947-1 designation: Pillar terminal.

Certifications and compliance

Certifications obtained:

Type	cULus	UL	CSA	EAC	CCC	Register of shipping RINA	Register of shipping LROS
BG06 A	●			●	●		
BG09 A	●			●	●		
BG12 A	●			●	●		
BGF09 A	●			●	●		
BGP... A⓱	cULus			●	●		
BF09 A	●		●	●	●	●	
BF12 A	●		●⓮	●	●	●	
BF18 A	●		●	●	●	●	
BF25 A	●		●⓮	●	●	●	
BF26 A	●		●	●	●	●	
BF32 A	●		●	●	●	●	
BF38 A	●		●⓮	●	●	●	
BF40 A	●			●	●		
BF50 A	●			●	●		
BF65 A	●			●	●		
BF80 A	●			●	●		
BF95	●		●	●	●	●	●
BF110	●			●	●		
B115		●	●	●	●	●	●
B145		●	●	●	●	●	●
B180		●	●	●	●	●	●
B250		●	●	●	●	●	●
B310		●	●	●	●	●	●
B400		●	●	●	●	●	●
B500	●			●			
B630	●			●			
B630 1000	●			●			
B1250				●			
B1600				●			

● Certified products.

UL - UL Listed, for USA and Canada (cULus - File E93602) for BG… BF110 types indicated, as Motor Controllers – Contactors, except for BGP09… types which are UL Recognized, for USA and Canada (cULus File E93602 – Component - Products having this type of marking are intended for use as components of complete workshop-assembled equipment).
BGP is UL rated up to 300V; for type with rating up to 600V, consult Customer Service for information – see contact details on inside front cover.
UL Listed for USA only (File E93602) for B115…B400 types indicated, as Motor Controllers – Contactors.
UL Listed for USA and Canada (cULus - File E172189) for B500... B630 1000 and B500 SL... B630 SL types as Industrial Control Switches.

CSA - BF09…BF95 and B115…B400 contactors are also CSA certified, for Canada only (File 54332).
In addition, BF12…, BF25…, BF38… and BF65… types are CSA certified as "Elevator Equipment" (File 54332, class 2411).
See technical characteristics on page 2-63 for BF12-BF38 and page 2-65 for BF65.

⓮ This contactor has also achieved CSA elevator equipment certification.

Compliant with standards: IEC/EN 60947-1, IEC/EN 60947-4-1, UL508, CSA C22.2 n° 14; UL 60947-1, UL 60947-4-1, CSA C22.2 n° 60947-1, CSA C22.2 n° 60947-4-1.
Plastic materials are compliant with standards IEC/EN 60335; for all BF09…BF38 versions only, add suffix V260 to the standard product order code.
Example: BF09 10 A230V260 for BF09, three poles, with one NO contact and 230V 50/60Hz coil with compliant plastic materials.


BG06 D…BG12 D
BG09 L


BF09 D…BF25 D
BF09 L…BF25 L


BF26 D-BF38 D
BF26 L-BF38 L



BF40 E…BF80 E


BF95 C…BF110 C


B115…B180


B250…B400

Three-phase motor control													UL/CSA details						
Order code DC coil	DC coil Low consumption	IEC operating current Ith (AC1) ≤40°C	≤55°C	≤70°C	Ie (AC3) ≤440V at ≤55°C	Maximum IEC power at ≤55°C (AC3) 230V	400V	415V	440V	500V	690V	1000V	Maximum UL/CSA horsepower ratings Single phase 120V	240V	Three phase 200V	240V	480V	600V
		[A]	[A]	[A]	[A]	[kW]	[kW]	[kW]	[kW]	[kW]	[kW]	[kW]	[HP]	[HP]	[HP]	[HP]	[HP]	[HP]
11 BG06 01 D❶	—	16	14	12	6	1.5	2.2	2.4	2.5	3	3	—	1/3	1	1 1/2	2	3	3
11 BG06 10 D❶	—																	
11 BG09 01 D❶	**11 BG09 01 L❷**	20	18	15	9	2.2	4	4.3	4.5	5	5	—	1/2	1 1/2	2	3	5	5
11 BG09 10 D❶	**11 BG09 10 L❷**																	
11 BGF09 01 D❶	**11 BGF09 01 L❷**	20	18	15	9	2.2	4	4.3	4.5	5	5	—	1/2	1 1/2	2	3	5	5
11 BGF09 10 D❶	**11 BGF09 10 L❷**																	
11 BGP09 01 D❶	—	20	18	15	9	2.2	4❽	4.3❽	4.5❽	5❽	—	—	1/2	1 1/2	2	3	5❽	—
11 BGP09 10 D❶	—																	
11 BG12 01 D❶⓬	—	20	18	15	12	3.2	5.7	6.2	5.5	5	5	—	1/2	1 1/2	3	3	7 1/2	10
11 BG12 10 D❶⓬	—																	
BF09 01 D❶⓬	**BF09 01 L❷⓬**	25	20	18	9	2.2	4.2	4.5	4.8	5.5	7.5	—	3/4	2	3	3	5	7 1/2
BF09 10 D❶⓬	**BF09 10 L❷⓬**																	
BF12 01 D❶⓬	**BF12 01 L❷⓬**	28	23	20	12	3.2	5.7	6.2	6.2	7.5	10	—	1	2	5	5	7 1/2	10
BF12 10 D❶⓬	**BF12 10 L❷⓬**																	
BF18 01 D❶⓬	**BF18 01 L❷⓬**	32	26	23	18	4	7.5	9	9	10	10	—	1	3	5	5	10	15
BF18 10 D❶⓬	**BF18 10 L❷⓬**																	
BF25 01 D❶	**BF25 01 L❷**	32	26	23	25	7	12.5	13.4	13.4	15	11	—	2	3	7 1/2	7 1/2	15	15
BF25 10 D❶	**BF25 10 L❷**																	
BF26 00 D❶⓬	**BF26 00 L❷⓬**	45	36	32	26	7.3	13	14	14	15.6	18.5	—	2	5	7 1/2	7 1/2	15	20
BF32 00 D❶⓬	**BF32 00 L❷⓬**	56	45	40	32	8.8	18	17	17	20	22	—	3	7 1/2	10	10	20	25
BF38 00 D❶	**BF38 00 L❷**	56 (60⓫)	45 (48⓫)	40 (42⓫)	38	11	18.5	18.5	18.5	20	22	—	3	7 1/2	10	15	30	30
BF40 00 E❸	—	70	60	50	40	11	18.5	22	22	22	30	18	3	7 1/2	10	15	30	40
BF50 00 E❸⓬	—	90	75	60	50	15	22	30	30	30	37	22	3	7 1/2	10	15	30	40
BF65 00 E❸⓬	—	100	80	65	65	18.5	30	37	37	37	45	30	—	—	20	25	50	60
BF80 00 E❸	—	115	95	75	80	22	45	45	45	55	75	37	—	—	25	30	60	75
11 BF95 C 00❶❸	—	125	100	80	95	27.6	50	55	55	56	74	45	—	—	30	30	60	75
11 BF110 C 00❶❸	—	125	100	80	110	33	61	66	70	59	80	45	—	—	30	40	75	100
11 B115 00❹❺	—	160	150	110	110	33	61	66	70	80	100	63	—	—	30	40	75	100
11 B145 00❹❺	—	250	235	190	150	46	80	88	93	100	120	75	—	—	50	50	100	125
11 B180 00❹❺	—	275	250	200	185	57	100	108	115	123	144	103	—	—	60	75	150	150
11 B250 00❹❺	—	350	300	250	265	83	140	155	164	176	212	156	—	—	75	100	200	250
11 B310 00❹❼	—	450	370	300	320	100	170	188	200	213	256	180	—	—	100	125	250	300
11 B400 00❹❺	—	550	430	360	420	130	225	247	263	271	352	208	—	—	125⓫	150⓫	350⓫	400⓫
11 B500 00❹❺	—	700	550	500	520	156	290	306	328	367	416	312	—	—	150⓫	200⓫	400⓫	450⓫
11 B630 00❹❺	—	800	640	540	630	198	335	368	368	368	440	368	—	—	200	250	500	500
11 B630 1000 00❹❼	—	1000	850	700	—	For AC1/Resisteve duty only, see page 2-8.							—	—	—	—	—	—

❶ Complete order code with coil voltage digit.
For BG09…D 24VDC version complete with built-in surge suppressor, add suffix **V120** to the standard order code.
The BF09-BF38D types already have a standard supplied built-in TVS (Transient Voltage Suppressor).
Standard voltages are as follows:
– DC 012 / 024 / 048 / 060 / 110 / 125 / 220V.
Example: 11 BG06 10 D012 for mini-contactor BG06, three poles, with one NO contact and 12VDC coil.
11 BG09 10 D024 V120 for mini-contactor BG09, three poles, with one NO contact and 24VDC coil, complete with built-in TVS (diode) suppressor.

❷ Low-consumption version.
No add-on auxiliary contacts or mechanical interlock can be mounted on BG... type contactors.
Complete order code with coil voltage digit.
The BF09-BF38L types already have a standard supplied built-in TVS (Transient Voltage Suppressor).
Standard voltages are as follows:
– DC 024 / 048V.
Example: 11 BG09 01 L024 for mini-contactor BG09, three poles, with one NC contact and 24VDC low-consumption coil.

❸ The contactor coil is controlled electronically; it can have either an AC or a DC supply and has a wide operating range.
The order code must be completed with the coil voltage digit.
The standard voltages are as follows:
– AC/DC 024 = 20...48V; 110 = 60...110V; 230 = 100...250V.

❹ The coil of the contactor can be powered indifferently in AC or DC. Complete the order code only with the digit of the coil voltage.
Standard voltages are:
– AC/DC 24 / 48 / 60 / 110-125 (indicate 110) / 220-240 (indicate 220) / 380-415 (indicate 380) / 440-480V (indicate 440).
Example: 11 B145 00 110 for contactor B145, three poles, without auxiliary contacts and with 110-125VAC/DC coil.
The 24VAC/DC voltage is not possible for B500-B630 1000 contactors.
The 24VAC/DC voltage is not possible for B500-B630 1000 contactors.
Other voltages available on request.

❺ If predisposed for mechanical latch (G495), the order code becomes 11 B…SL.00 ❹.
If already fitted with mechanical latch (G495), the order code becomes 11 B…L.00 ❹ ❻.

❻ Indicate rated voltage of the mechanical latch, preceded by the letter C if in DC.
Standard voltages are:
– AC 50/60Hz 48 / 110-125 indicate 110 / 220-240 indicate 220 / 380-415V indicate 380
– DC 48 / 110-125 indicate 110 / 220-240V indicate 220.
Example: 11 B145L 00 110 C48 for contactor B145, three poles, without auxiliary contacts, with 110-125VAC/DC coil and mechanical latch powered at 48VDC.

❼ G495 mechanical latch cannot be mounted.

❽ Maximum voltage is limited at 300V for UL. For certified type up to 600V, consult Customer Service for information; see contact details on inside front cover.

❾ Highly conductive auxiliary contact.



B500-B630



B630 1000

	UL/CSA General (purpose) use	UL/CSA Fuse class	Short circuit current RMS sym. 600VAC	Type of terminal	Incorporated auxiliary contacts		Quantity per pkg	Weight
	[A]	Type/[A]	[kA] UL/CSA		NO	NC	n°	[kg]
	16	K5/30	5	Clamp-screw	—	1⑨	10	0.214
					1⑨	—	10	0.214
	20	K5/30	5	Clamp-screw	—	1⑨	10	0.214
					1⑨	—	10	0.214
	20	K5/30	5	Faston	—	1⑨	10	0.210
					1⑨	—	10	0.210
	20	K5/30	5	Rear PCB solder pin	—	1⑨	10	0.240
					1⑨	—	10	0.240
	20	K5/30	5	Clamp-screw	—	1⑨	10	0.214
					1⑨	—	10	0.214
	25	RK5/60	5	Clamp-screw	—	1⑨	1	0.494
					1	—	1	0.494
	28	RK5/70	5	Clamp-screw	—	1⑨	1	0.494
					1	—	1	0.494
	32	RK5/80	5	Clamp-screw	—	1⑨	1	0.494
					1	—	1	0.494
	32	RK5/100	5	Clamp-screw	—	1⑨	1	0.494
					1	—	1	0.494
	45	RK5/100	5	Clamp-screw	—	—	1	0.559
	55	RK5/125	5	Clamp-screw	—	—	1	0.559
	55	RK5/150	5	Clamp-screw	—	—	1	0.559
	70	RK5/150	10	Lug-clamp ⑬	—	—	1	1.050
	90	RK5/200	10	Lug-clamp ⑬	—	—	1	1.050
	100	RK5/225	10	Lug-clamp ⑬	—	—	1	1.050
	115	RK5/250	10	Lug-clamp ⑬	—	—	1	1.050
	125	RK5/250	10	Lug-clamp ⑬	—	—	1	1.895
	125	RK5/250	10	Lug-clamp ⑬	—	—	1	1.895
	160	RK5/500	10	Screw-nut	—	—	1	5.290
	250	RK5/500	10	Screw-nut	—	—	1	5.400
	275	RK5/500	10	Screw-nut	—	—	1	5.400
	350	L/800	18	Screw-nut	—	—	1	9.635
	450	L/800	18	Screw-nut	—	—	1	9.635
	500 ⑬	L/800 ⑪	18⑪	Screw-nut	—	—	1	9.635
	700 ⑬	L/1200 ⑪	18⑪	Screw-nut	—	—	1	18.060
	800 ⑬	L/1500 ⑪	18⑪	Screw-nut	—	—	1	18.620
	1000	L/1500	18	Screw-nut	—	—	1	21.400

⑩ For use at this other current value, a 16mm² cable, headed with a fork terminal, must be used.
⑪ No UL/CSA ratings; data given for indication and reference purposes only.
⑫ Definite-purpose (DP) contactors are available. Consult Customer Service for information; see contact details on inside front cover.
⑬ IEC/EN 60947-1 designation: Pillar terminal.

Certifications and compliance
Certifications obtained:

Type	cULus	UL	CSA	EAC	CCC	RINA
BG06 D	●			●	●	
BG09 D	●			●	●	
BG12 D	●			●	●	
BGF09 D	●			●	●	
BGP09 D⑧	●	●	●			
BF09 D - BF09 L	●		●	●	●	●
BF12 D - BF12 L	●		●⑭	●	●	●
BF18 D - BF18 L	●		●	●	●	●
BF25 D - BF25 L	●		●⑭	●	●	●
BF26 D - BF26 L	●		●	●	●	●
BF32 D - BF32 L	●		●	●	●	●
BF38 D - BF38 L	●		●⑭	●	●	●
BF40 E	●			●	●	
BF50 E	●			●	●	
BF65 E	●			●	●	
BF80 E	●			●	●	
BF95 C	●		●	●	●	●
BF110 C	●			●	●	
B115		●	●	●	●	●
B145		●	●	●	●	●
B180		●	●	●	●	●
B250		●	●	●	●	●
B310		●	●	●	●	●
B400		●	●	●	●	●
B500	●			●		
B630	●			●	●	
B630 1000	●			●		

● Certified products.

UL - UL Listed, for USA and Canada (cULus File E93602) for BG…BF110 types indicated, as Motor Controllers – Contactors, except for BGP09… types which are UL Recognized, for USA and Canada (cULus File E93602 – Component). Products having this type of marking are intended for use as components of complete workshop-assembled equipment.
BGP is UL rated up to 300V; for type with rating up to 600V, consult Customer Service for information – see contact details on inside front cover.
UL Listed for USA only (File E93602) for B115…B400 types indicated, as Motor Controllers – Contactors.
UL Listed for USA and Canada (cULus - File E172189) for B500... B630 1000 and B500 SL... B630 SL types as Industrial Control Switches.

CSA - BF09…BF95 and B115…B400 contactors are also CSA certified, for Canada only (File 54332).
In addition, BF12…, BF25…, BF38… and BF65… types are CSA certified as "Elevator Equipment" (File 54332, class 2411).
See technical characteristics on page 2-63 for BF12-BF38 and page 2-65 for BF65.

⑭ This contactor has also achieved CSA elevator equipment certification.

Compliant with standards: IEC/EN 60947-1, IEC/EN 60947-4-1, UL508, CSA C22.2 n° 14; UL 60947-1, UL 60947-4-1, CSA C22.2 n° 60947-1, CSA C22.2 n° 60947-4-1.
Plastic materials are compliant with standards IEC/EN 60335; for all BF09…BF38 versions only, add suffix V260 to the standard product order code.
Example: BF09 10 D024 V260 for BF09, three poles, with one NO contact and 24VDC coil with compliant plastic materials.

2


BG09 T4 A


BF09A T4 A…BF18 T4 A


BF26 T4 A…BF38 T4 A



BF40 T4 A…BF80 T4 A


B115 4…B180 4


B250 4…B400 4

Resistive load control											UL/CSA details
Order code AC coil	IEC operating current Ith (AC1) ≤40°C	≤55°C	≤70°C	Maximum IEC power at ≤40°C (AC1) 230V	400V	415V	440V	500V	690V	1000V	UL/CSA General (purpose) use
	[A]	[A]	[A]	[kW]	[kW]	[kW]	[kW]	[kW]	[kW]	[kW]	[A]
11 BG09 T4 A❶⑩	20	18	15	8	14	14	15	16	22	—	20
11 BGF09 T4 A❶	20	18	15	8	14	14	15	16	22	—	20
11 BGP09 T4 A❶	20	18	15	8	14❼	14❼	15❼	16❼	—	—	20
BF09 T4 A❶⑩	25	20	18	9.5	16	17	18	21	27	—	25
BF12 T4 A❶⑩	28	23	20	10	18	19	20	23	32	—	28
BF18 T4 A❶⑩	32	26	23	12	21	22	23	26	36	—	32
BF26 T4 A❶❽⑩	45	36	32	17	30	31	33	37	51	—	45
BF38 T4 A❶❽	56 (60❾)	45 (48❾)	40 (42❾)	21	36	38	40	45	62	—	55
BF40 T4 A❶	70	60	50	26	46	48	51	58	79	115	70
BF50 T4 A❶	90	75	60	34	59	61	65	74	102	148	90
BF65 T4 A❶	100	80	65	38	65	68	72	82	114	165	100
BF80 T4 A❶	115	95	75	43	76	79	83	95	120	185	115
11 B115 4 00❷❸	160	150	110	57	98	107	115	129	173	250	160
11 B145 4 00❷❸	250	235	190	91	150	162	180	196	270	390	250
11 B180 4 00❷❸	275	250	200	95	160	177	200	213	298	430	275
11 B250 4 00❷❸	350	300	250	124	214	234	255	282	380	560	350
11 B310 4 00❷❺	450	370	300	158	270	293	325	350	488	700	450
11 B400 4 00❷❸	550	430	360	200	345	377	400	452	598	870	550
11 B500 4 00❷❸	700	550	500	252	438	478	500	575	755	1100	700
11 B630 4 00❷❸	800	640	540	288	500	545	580	655	860	1250	800
11 B630 1000 4 00❷❺	1000	850	700	350	600	630	725	750	1000	1600	1000
11 B1250 4 24❺❻	1250	1050	880	480	830	900	905	1100	1450	2000	No UL/CSA
11 B1600 4 24❺❻	1600	1360	1120	550	950	1000	1160	1200	1650	2500	No UL/CSA

❶ Complete order code with coil voltage digit or voltage digit followed by 60 if 60Hz.
Standard voltages are as follows:
– AC 50/60Hz 024 / 048 / 110 / 230 / 400V
– AC 60Hz 024 60 / 048 60 / 120 60 / 220 60 / 230 60 / 460 60 / 575 60 (V).
Example: 11 BG09 T4 A230 for mini-contactor BG09, four poles, with 230VAC 50/60Hz coil.
11 BG09 T4 A460 60 for mini-contactor BG09, four poles, with 460VAC 60Hz coil.

❷ The coil of the contactor can be powered indifferently in AC or DC. Complete the order code only with the digit of the coil voltage. Standard voltages are:
– AC/DC 24 / 48 / 60 / 110-125 (indicate 110) / 220-240 (indicate 220) / 380-415 (indicate 380) / 440-480V (indicate 440).
Example: 11 B145 4 00 110 for contactor B145, four poles, without auxiliary contacts and with 110-125VAC/DC coil.
The 24VAC/DC voltage is not possible for B500-B630 1000 contactors.
The 24VAC/DC voltage is not possible for B500-B630 1000 contactors.
Other voltages available on request.

❸ If predisposed for mechanical latch (G495), the order code becomes 11 B…4SL 00 ❷.
If already fitted with mechanical latch (G495), the order code becomes 11 B…4L.00 ❷ ❹.

❹ Indicate rated voltage of the mechanical latch, preceded by the letter C if in DC.
Standard voltages are:
– AC 50/60Hz 48 / 110-125 indicate 110 / 220-240 indicate 220 / 380-415V indicate 380
– DC 48 / 110-125 indicate 110 / 220-240V indicate 220.
Example: 11 B145 4L 00 110 C220 for contactor B145, four poles, without auxiliary contacts, with 110-125VAC/DC coil and mechanical latch powered at 220-240VDC.

❺ G495 mechanical latch cannot be mounted.

❻ Complete the order code with the digit of the coil voltage. For 110-125VAC 50/60 Hz indicate 110 or 220-240VAC 50/60 Hz indicate 220.
Example: 11 B1250 4 24 110 for contactor B1250, four poles, with 2NO+4NC auxiliary contacts and 110-125VAC/DC 50/60Hz coil.

❼ Maximum voltage is limited at 300V for UL. For certified type up to 600V. Consult Customer Service for information; see contact details on inside front cover.

❽ Whenever the BF26 T4 or BF38 T4 types need to be mechanically interlocked with either the BFX50 00 or BFX50 01, the add-on fourth pole of one of the contactors needs to be removed from the right side and fitted on the left side.

❾ For use at this other current value, a 16mm² cable, headed with a fork terminal, must be used.

❿ Definite-purpose (DP) contactors are available. Consult Customer Service for information; see contact details on inside front cover.


B500 4-B630 4


B630 1000 4


B1250-B1600 4

	UL/CSA Fuse class	Short circuit current RMS sym. 600VAC	Type of terminal	Incorporated auxiliary contacts		Quantity per pkg	Weight
	Type / [A]	[kA] UL/CSA		NO	NC	n°	[kg]
	K5 / 30	5	Clamp-screw	none	none	10	0.180
	K5 / 30	5	Faston	none	none	10	0.180
	K5 / 30	5	Rear PCB solder pin	none	none	10	0.197
	RK5 / 60	5	Clamp-screw	none	none	1	0.367
	RK5 / 70	5	Clamp-screw	none	none	1	0.367
	RK5 / 80	5	Clamp-screw	none	none	1	0.367
	RK5 / 100	5	Clamp-screw	none	none	1	0.508
	RK5 / 150	5	Clamp-screw	none	none	1	0.508
	RK5 / 150	10	Lug-clamp ⓫	—	—	1	1.100
	RK5 / 200	10	Lug-clamp ⓫	—	—	1	1.100
	RK5 / 225	10	Lug-clamp ⓫	—	—	1	1.100
	RK5 / 250	10	Lug-clamp ⓫	—	—	1	1.100
	RK5 / 500	10	Screw-nut	none	none	1	6.220
	RK5 / 500	10	Screw-nut	none	none	1	6.340
	RK5 / 500	10	Screw-nut	none	none	1	6.340
	L/800	18	Screw-nut	none	none	1	11.195
	L/800	18	Screw-nut	none	none	1	11.195
	L/800 ⓬	18 ⓬	Screw-nut	none	none	1	11.195
	L/1200 ⓬	18 ⓬	Screw-nut	none	none	1	20.910
	L/1500 ⓬	18 ⓬	Screw-nut	none	none	1	21.880
	L/1500	18	Screw-nut	none	none	1	25.620
	—	—	Screw-nut	2	4	1	57.500
	—	—	Screw-nut	2	4	1	58.400

⓫ IEC/EN 60947-1 designation: Pillar terminal.
⓬ No UL/CSA ratings; data given for indication and reference purposes only.

IEC utilisation current with poles in parallel
If the poles of the contactors are arranged in parallel, the operating current is the one indicated in the table multiplied by the **K** factor given below, which account for the unequal distribution of the current in the various poles.
To limit distribution inequality, it is advisable to use paralleling links (see pages 2-16, 2-21 and 2-26).

2 POLES in parallel: **K** = 1.6
3 POLES in parallel: **K** = 2.2
4 POLES in parallel: **K** = 2.8

Certifications and compliance
Certifications obtained:

Type	cULus	UL	CSA	EAC	CCC	RINA
BG09 T4 A	●			●	●	
BGF09 T4 A	●			●	●	
BGP09 T4 A⓱	cULus			●	●	
BF09 T4 A	●		●	●	●	●
BF12 T4 A	●		●⓭	●	●	●
BF18 T4 A	●		●	●	●	●
BF26 T4 A	●		●⓭	●	●	●
BF38 T4 A	●		●⓭	●	●	●
BF40 T4 A	●			●	●	
BF50 T4 A	●			●	●	
BF65 T4 A	●			●	●	
BF80 T4 A	●			●	●	
B115 4		●	●	●	●	
B145 4		●	●	●	●	
B180 4		●	●	●	●	
B250 4		●	●	●	●	
B310 4		●	●	●	●	
B400 4		●	●	●	●	
B500 4	●			●		
B630 4	●			●	●	
B630 1000 4	●			●		
B1250 4				●		
B1600 4				●		

● Certified products.

UL - UL Listed, for USA and Canada (cULus File E93602) for BG…BF110 types indicated, as Motor Controllers – Contactors, except for BGP09… types which are UL Recognized, for USA and Canada (cULus File E93602 – Component). Products having this type of marking are intended for use as components of complete workshop-assembled equipment.
BGP is UL rated up to 300V; for type with rating up to 600V, consult Customer Service for information – see contact details on inside front cover.
UL Listed for USA only (File E93602) for B115…B400 types indicated, as Motor Controllers – Contactors.
UL Listed for USA and Canada (cULus - File E172189) for B500 4... B630 1000 4 and B500 4SL... B630 4SL types as Industrial Control Switches.

CSA - BF09…BF80 and B115…B400 contactors are also CSA certified, for Canada only (File 54332).
In addition, BF12…, BF25…, BF38… and BF65… types are CSA certified as "Elevator Equipment" (File 54332, class 2411).
See technical characteristics on page 2-63 for BF12-BF38 and page 2-65 for BF65.

⓭ This contactor has also achieved CSA elevator equipment certification.

Compliant with standards: IEC/EN 60947-1, IEC/EN 60947-4-1, UL508, CSA C22.2 n° 14; UL 60947-1, UL 60947-4-1, CSA C22.2 n° 60947-1, CSA C22.2 n° 60947-4-1.
Plastic materials are compliant with standards IEC/EN 60335; for all BF09…BF38 versions only, add suffix V260 to the standard product order code.
Example: BF09 T4 A230 V260 for BF09, four poles, 230V 50/60Hz coil with compliant plastic materials.



BG09 T4 D



BF09 T4 D-BF18 T4 D
BF09 T4 L-BF18 T4 L



BF26 T4 D-BF38 T4 D
BF26 T4 L-BF38 T4 L



BF65 T4 E
BF80 T4 E



B115 4…B180 4



B250 4…B400 4

Resistive load control											UL/CSA details
Order code DC coil	DC coil Low consumption	IEC operating current Ith (AC1) ≤40°C	≤55°C	≤70°C	Maximum IEC power at ≤40°C (AC1) 230V	400V	415V	440V	500V	690V	1000V	UL/CSA General (purpose) use
		[A]	[A]	[A]	[kW]	[kW]	[kW]	[kW]	[kW]	[kW]	[kW]	[A]
11 BG09 T4 D❶	—	20	18	15	8	14	14	15	16	22	—	20
11 BGF09 T4 D❶	—	20	18	15	8	14	14	15	16	22	—	20
11 BGP09 T4 D❶	—	20	18	15	8	14❽	14❽	15❽	16❽	—	—	20
BF09 T4 D❶	**BF09 T4 L❷**	25	20	18	9.5	16	17	18	21	27	—	25
BF18 T4 D❶	**BF18 T4 L❷**	32	26	23	12	21	22	23	26	36	—	32
BF26 T4 D❶	**BF26 T4 L❷**	45	36	32	17	30	31	33	37	51	—	45
BF38 T4 D❶	**BF38 T4 L❷**	56 (60❾)	45 (48❾)	40 (42❾)	21	26	38	40	45	62	—	55
BF65 T4 E❸	—	100	80	65	38	65	68	72	82	114	165	100
BF80 T4 E❸	—	115	95	75	43	76	79	83	95	120	185	115
11 B115 4 00❹❺	—	160	150	110	57	98	107	115	129	173	250	160
11 B145 4 00❹❺	—	250	235	190	91	150	162	180	196	270	390	250
11 B180 4 00❹❺	—	275	250	200	95	160	177	200	213	298	430	275
11 B250 4 00❹❺	—	350	300	250	124	214	234	255	282	380	560	350
11 B310 4 00❹❼	—	450	370	300	158	270	293	325	350	488	700	450
11 B400 4 00❹❺	—	550	430	360	200	345	377	400	452	598	870	550
11 B500 4 00❹❺	—	700	550	500	252	438	478	500	575	755	1100	700
11 B630 4 00❹❺	—	800	640	540	288	500	545	580	655	860	1250	800
11 B630 1000 4 00❹❼	—	1000	850	700	350	600	630	725	750	1000	1600	1000

❶ Complete order code with coil voltage digit.
The BF09-BF38D types already have a standard supplied built-in TVS (Transient Voltage Suppressor).
Standard voltages are as follows:
– DC 012 / 024 / 048 / 060 / 110 / 125 / 220VDC.
Example: 11 BG09 T4 D012 for mini-contactor BG09, four poles, with 12VDC coil.

❷ Low consumption version. Complete the order code with coil voltage digit.
The BF09-BF38L types already have a standard supplied built-in TVS (Transient Voltage Suppressor).
Standard voltages are as follows:
– DC 024 / 048V
Example: BF09 T4 L024 for contactor BF09, four poles, with 24VDC low-consumption coil.

❸ The contactor coil is controlled electronically; it can have either an AC or a DC supply and has a wide operating range.
Complete the order code only with the digit of the coil voltage.
Standard voltages are:
– AC/DC 024 = 20...48V; 110 = 60...110V; 230 = 100...250V.

❹ The coil of the contactor can be powered indifferently in AC or DC. Complete the order code only with the digit of the coil voltage.
Standard voltages are:
– AC/DC 24 / 48 / 60 / 110-125 indicate 110 / 220-240 indicate 220 / 380-415 indicate 380 / 440-480V indicate 440.
Example: 11 B145 00 110 for contactor B145, four poles, without auxiliary contacts and with 110-125VAC/DC coil.
The 24VAC/DC voltage is not possible for B500-B630 1000 contactors.
The 24V voltage is not possible for B500-B630 1000 contactors.
Other voltages available on request.

❺ If predisposed for mechanical latch (G495), the order code becomes 11 B…4SL 00 ❹.
If already fitted with mechanical latch (G495), the order code becomes 11 B…4L.00 ❹ ❻.

❻ Indicate rated voltage of the mechanical latch, preceded by the letter C if in DC.
Standard voltages are:
– AC 50/60Hz 48 / 110-125 indicate 110 / 220-240 indicate 220 / 380-415V indicate 380
– DC 48 / 110-125 indicate 110 / 220-240V indicate 220.
Example: 11 B145L 00 110 C48 for contactor B145, four poles, without auxiliary contacts, with 110-125VAC/DC coil and mechanical latch powered at 48VDC.

❼ G495 mechanical latch cannot be mounted.

❽ Maximum voltage is limited at 300V for UL. For certified type up to 600V consult Customer Service for information; see contact details on inside front cover.

❾ For use at this other current value, a 16mm² cable, headed with a fork terminal, must be used.



B500 4-B630 4



B630 1000 4

	UL/CSA Fuse class	Short circuit RMS sym. 600VAC	Type of terminal	Incorporated auxiliary contacts		Quantity per pkg	Weight
	Type / [A]	[kA] UL/CSA		NO	NC	n°	[kg]
	K5 / 30	5	Clamp-screw	—	—	10	0.220
	K5 / 30	5	Faston	—	—	10	0.220
	K5 / 30	5	Rear PCB solder pin	—	—	10	0.242
	RK5 / 60	5	Clamp-screw	—	—	1	0.498
	RK5 / 80	5	Clamp-screw	—	—	1	0.498
	RK5 / 100	5	Clamp-screw	—	—	1	0.665
	RK5 / 150	5	Clamp-screw	—	—	1	0.665
	RK5 / 225	10	Lug-clamp⑩⑪	—	—	1	1.150
	RK5 / 250	10	Lug-clamp⑩⑪	—	—	1	1.150
	RK5 / 500	10	Screw-nut	—	—	1	6.220
	RK5 / 500	10	Screw-nut	—	—	1	6.340
	RK5 / 500	10	Screw-nut	—	—	1	6.340
	L/800	18	Screw-nut	—	—	1	11.195
	L/800	18	Screw-nut	—	—	1	11.195
	L/800	18	Screw-nut	—	—	1	11.195
	L/1200 ⑩	18 ⑩	Screw-nut	—	—	1	20.910
	L/1200 ⑩	18 ⑩	Screw-nut	—	—	1	21.880
	L/1500 ⑩	18 ⑩	Screw-nut	—	—	1	25.600

⑩ No UL/CSA ratings; data given for indication and reference purposes only.
⑪ IEC/EN 60947-1 designation: Pillar terminal.

IEC utilisation current with poles in parallel
If the poles of the contactors are arranged in parallel, the operating current is the one indicated in the table multiplied by the **K** factor given below, which account for the unequal distribution of the current in the various poles.
To limit distribution inequality, it is advisable to use paralleling links (see pages 2-16, 2-21 and 2-26).

2 POLES in parallel: **K** = 1.6
3 POLES in parallel: **K** = 2.2
4 POLES in parallel: **K** = 2.8

Certifications and compliance
Certifications obtained:

Type	cULus	UL	CSA	EAC	CCC	RINA
BG09 T4 D	●			●	●	
BGF09 T4 D	●			●	●	
BGP09 T4 D⑦	●			●	●	
BF09 T4 D - BF09 T4 L	●		●	●	●	●
BF18 T4 D - BF18 T4 L	●		●	●	●	●
BF26 T4 D - BF26 T4 L	●		●⑫	●	●	●
BF38 T4 D - BF38 T4 L	●		●⑫	●	●	●
BF65 T4 E	●			●	●	
BF80 T4 E	●			●	●	
B115 4		●	●	●	●	
B145 4		●	●	●	●	
B180 4		●	●	●	●	
B250 4		●	●	●	●	
B310 4		●	●	●	●	
B400 4		●	●	●	●	
B500 4	●			●		
B630 4	●			●	●	
B630 1000 4	●			●		

● Certified products.

UL - UL Listed, for USA and Canada (cULus File E93602) for BG…BF110 types indicated, as Motor Controllers – Contactors, except for BGP09… types which are UL Recognized, for USA and Canada (cULus File E93602 – Component). Products having this type of marking are intended for use as components of complete workshop-assembled equipment.
BGP is UL rated up to 300V; for type with rating up to 600V, consult Customer Service for information – see contact details on inside front cover.
UL Listed for USA only (File E93602) for B115…B400 types indicated, as Motor Controllers – Contactors.
UL Listed for USA and Canada (cULus - File E172185) for B500 4... B630 1000 4 and B500 4SL... B630 4SL types as Industrial Control Switches.

CSA - BF09…BF95 and B115…B400 contactors are also CSA certified, for Canada only (File 54332).
In addition, BF12…, BF25…, BF38… and BF65… types are CSA certified as "Elevator Equipment" (File 54332, class 2411).
See technical characteristics on page 2-63 for BF12-BF38 and page 2-65 for BF65.

⑫ This contactor has also achieved CSA elevator equipment certification.

Compliant with standards: IEC/EN 60947-1, IEC/EN 60947-4-1, UL508, CSA C22.2 n° 14; UL 60947-1, UL 60947-4-1, CSA C22.2 n° 60947-1, CSA C22.2 n° 60947-4-1.
Plastic materials are compliant with standards IEC/EN 60335; for all BF09…BF38 versions only, add suffix V260 to the standard product order code.
Example: BF09 T4 D024 V260 for BF09, four poles, 24VDC coil with compliant plastic materials.

2

Mini-contactor four power poles, 2 NO and 2 NC BG series



11 BG09 T2...

Order code	IEC rated conventional free air thermal current Ith ≤40°C	≤55°C	≤60°C	Qty per pkg	Wt
	[A]	[A]	[A]	n°	[kg]
AC COIL. Terminals: clamp screw.					
11 BG09 T2 A❶	20	18	15	1	0.170
DC COIL. Terminals: clamp screw.					
11 BG09 T2 D❷	20	18	15	1	0.175

Operational characteristics

Type	UL/CSA General use	Protection fuse IEC gG	Protection fuse UL K5	Conductor section	
	[A]	[A]	[A]	[mm²]	[AWG]
BG09...T2	20	20	30	0.75-2.5	18-12

Certifications and compliance
Certifications obtained: CCC, EAC; UL Listed, for USA and Canada (cULus - File E93602), as Motor Controllers - Contactors.
Compliant with standards: IEC/EN 60947-1, IEC/EN 60947-4-1, UL508, CSA C22.2 n° 14.

Contactors four power poles, 2 NO and 2 NC BF series



BF09 T2...

Order code	IEC rated conventional free air thermal current Ith ≤40°C	≤55°C	≤60°C	Qty per pkg	Wt
	[A]	[A]	[A]	n°	[kg]
AC COIL. Terminals: clamp screw.					
BF09 T2 A❶	25	20	18	1	0.340
BF18 T2 A❶	32	26	23	1	0.340
BF26 T2 A❶	45	36	32	1	0.420
BF38 T2 A❶	56 (60❺)	45 (48❺)	40 (42❺)	1	0.420
new **BF80 T2 A❶**	115	95	75	1	1.075
DC COIL. Terminals: clamp screw.					
BF18 T2 D❷❻	32	26	23	1	0.470
BF26 T2 D❷❻	45	36	32	1	0.540
BF38 T2 D❷❻	56 (60❺)	45 (48❺)	40 (42❺)	1	0.540
new **BF80 T2 E❹**	115	95	75	1	1.125
DC COIL. Low consumption (2.4W). Terminals: clamp screw.					
BF18 T2 L❸❻	32	26	23	1	0.470
BF26 T2 L❸❻	45	36	32	1	0.540
BF38 T2 L❸❻	56 (60❺)	45 (48❺)	40 (42❺)	1	0.540

Operational characteristics

Type	UL/CSA General use	Protection fuse IEC gG	Protection fuse UL RK5	Conductor section	
	[A]	[A]	[A]	[mm²]	[AWG]
BF09 T2	25	32	60	1-6	16-10
BF18 T2	32	40	80	1-6	16-10
BF26 T2	45	50	100	1.5-10	14-6
BF38 T2	55	80	150	2.5-16	14-6
BF80 T2	115	115	250	6-50	18-2

Certifications and compliance
Certifications obtained: EAC, CCC, RINA; UL Listed for USA and Canada (cULus - File E93602) and CSA certified for Canada (File 54332), as Motor Controllers - Contactors.
Compliant with standards: IEC/EN 60947-1, IEC/EN 60947-4-1, UL508, CSA C22.2 n° 14.
Plastic materials are compliant with standards IEC/EN 60335; for all BF09...BF38 versions only, add suffix V260 to the standard product order code.
Example: BF09 T2 A230 V260 for BF09, 2NO+2NC main poles, 230V 50/60Hz coil with compliant plastic materials).

❶ Complete with coil voltage digit if 50/60Hz or with voltage digit followed by 60 if 60Hz. Standard voltages are:
– AC 50/60Hz 024 / 048 /110 / 230 / 400V
– AC 60Hz 024 60 / 048 60 / 120 60 / 220 60 / 230 60 / 460 60 / 575 60 (V).

Example:
– 11 BG09 T2 A230 for mini-contactor BG09 T2, 2 poles NO and 2 poles NC, with 230VAC 50/60Hz coil.
– 11 BG09 T2 A460 60 for mini-contactor BG09 T2, 2 poles NO and 2 poles NC, with 460VAC 60Hz coil.

❷ Complete the order code with coil voltage digit.
Standard voltages are:
– DC 012 / 024 / 048 / 060 / 110 / 125 / 220V.
The BF18-BF26-BF38 T2D types already have a standard supplied built-in TVS (Transient Voltage Suppressor).
Example:
– 11 BG09 T2 D012 for mini-contactor BG09 T2, 2 poles NO and 2 poles NC, with 12VDC coil.

❸ Low consumption version with built-in TVS. Complete the order code with coil voltage digit.
Standard voltages are:
– DC 024 / 048V.
Example:
– BF18 T2 L024 for contactor BF18 T2, 2 poles NO and 2 poles NC, with 24VDC low-consumption coil, supplied with TVS.

❹ The contactor coil is controlled electronically; it can have either an AC or a DC supply and has a wide operating range.
Complete the order code with coil voltage digit.
Standard voltages are:
– AC/DC 024 = 20...48V; 110 = 60...110V; 230 = 100...250V.

❺ For use at this other current value, a 16mm² cable, headed with a fork terminal, must be used.

❻ Maximum combinations of add-on blocks are given on page 2-19.

Contactors four power poles, 4 NC BF series



BF18 T0…

Order code	IEC rated conventional free air thermal current Ith ≤40°C [A]	≤55°C [A]	≤60°C [A]	Qty per pkg n°	Wt [kg]
AC COIL. Terminals: clamp screw.					
BF18 T0 A❶	32	26	23	1	0.340
BF26 T0 A❶	45	36	32	1	0.420
DC COIL. Terminals: clamp screw.					
BF18 T0 D❷❻	32	26	23	1	0.470
BF26 T0 D❷❻	45	36	32	1	0.540
DC COIL. Low consumption (2.4W). Terminals: clamp screw.					
BF18 T0 L❸❻	32	26	23	1	0.470

Operational characteristics

Type	UL/CSA General use [A]	Protection fuse IEC gG [A]	UL RK5 [A]	Conductor section [mm²]	[AWG]
BF18 T0	32	40	80	1-6	16-10
BF26 T0	45	50	150	1.5-10	14-6

Certifications and compliance

Certifications obtained: EAC, CCC, RINA; UL Listed for USA and Canada (cULus - File E93602) and CSA certified for Canada (File 54332), as Motor Controllers - Contactors.
Compliant with standards: IEC/EN 60947-1, IEC/EN 60947-4-1, UL508, CSA C22.2 n° 14.
Plastic materials are compliant with standards IEC/EN 60335; for BF18 and BF26 versions only, add suffix V260 to the standard product order code.
Example: BF18 T0 A230 V260 for BF18, four NC main poles, 230VAC 50/60Hz coil with compliant plastic materials).

NOTE: The BF18-BF26 T0D and BF18 T0L types have a standard supplied built-in TVS (Transient Voltage Suppressor).

Contators four NO power poles to connect in series for photovoltaic applications BF series



BFD80 T4



BFD80 40…

Order code	Operational current at 600V in DC1 ≤55°C with 4 poles in series [A]	Qty per pkg n°	Wt [kg]
AC COIL. Terminals: lug clamp❺.			
new **BFD80 T4 A❶**	100	1	1.100
11BFD80 40❶	125	1	1.440
AC/DC COIL. Terminals: lug clamp❺.			
new **BFD80 T4 E❶**	100	1	1.100
DC COIL. Terminals: lug clamp❺.			
11BFD80 C 40❷	125	1	1.910

❶ Complete with coil voltage digit if 50/60Hz or with voltage digit followed by 60 if 60Hz. Standard voltages are:
– AC 50/60Hz 024 / 048 /110 / 230 / 400V
– AC 60Hz 024 60 / 048 60 / 120 60 / 220 60 / 230 60 / 460 60 / 575 60 (V).
Example:
– BF18 T0 A230 for contactor BF18 T0, 4 NC power poles, with 230VAC 50/60Hz.
– 11 BFD80 40 024 for contactor BFD80 40, 4 NO power poles, with 24V 50/60Hz for photovoltaic application.

❷ Complete the order code with coil voltage digit.
Standard voltages are:
– DC 012 / 024 / 048 / 060 / 110 / 125 / 220V.
Example:
– BF18 T0 D012 for micro-contactor BF18 T0, 4 NC power poles, with 12VDC coil.

❸ Low-consumption version. Complete the order code with coil voltage digit.
Standard voltages are:
– DC 024 / 048V.
Example:
– BF18 T2 L024 (low-consumption BF18 T2 contactor with 2 NO poles and 2 NC poles supplied at 24VDC).

❹ The contactor coil is controlled electronically; it can have either an AC or a DC supply and has a wide operating range.
Complete the order code with coil voltage digit.
Standard voltages are:
– AC/DC 024 = 20...48V; 110 = 60...110V; 230 = 100...250V.

❺ IEC/EN 60947-1 designation: Pillar terminal.

❻ Maximum combinations of add-on blocks are given on page 2-19.

General characteristics

The contactors are specifically made with magnetic elements in the arc extinction chambers to obtain high DC load operational capabilities. They are used to disconnect and isolate the load between the photovoltaic panel and the AC/DC inverter.
For add-on contact blocks, accessories and spare parts, consider indications of the corresponding standard (11 BF80 40…, 11 BF80C 40…, BF50 T4 A... and BF50 T4 E...).

Italian Fire Department Directives

These directives provide for an disconnecting device for all current-carrying elements, that can be operated by remote control switch, placed in an easily reached and marked position, in order to safely isolate each part of the installation within the fire system compartment including the photovoltaic (PV) generator.
As an alternative, the PV generator must be installed, either externally of the fire system compartment or internally but in a dedicated compartment with adequate fire-resistant features. For such function, specifically designed contactors for on-load use in IEC DC1 duty up to 1000VDC are available.

Operational characteristics

Use in IEC DC1 duty

Type	IEC operational voltage Ue 400V	600V	800V	1000V
	IEC max current Ie in DC1 with L/R ≤1ms with 4 poles in series			
	[A]	[A]	[A]	[A]
BFD80 T4A...	100	100	76	60
BFD80 T4E...	100	100	76	60
BFD80…	125	125	95	75

Wiring scheme

4 poles

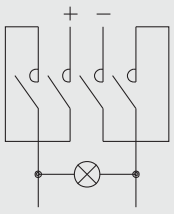

Compliance

Compliant with standards: IEC/EN 60947-1, IEC/EN 60947-4-1.

BFK contactors (including limiting resistors)

2



BFK...

Order code	Maximum IEC operational power at ≤50°C (AC-6b)❶ 240V	400V	440V 480V	690V	❷	Qty per pkg	Wt
	[kvar]	[kvar]	[kvar]	[kvar]	NO	n°	[kg]
AC COIL.							
BFK09 10A❸	4,5	7,5	9	10	1	10	0.413
BFK12 10A❸	7	12,5	14	16	1	10	0.413
BFK18 10A❸	9	15	17	20	1	10	0.413
BFK26 00A❸	11	20	22	25	–	10	0.472
BFK32 00A❸	14	25	27,5	30	–	10	0.472
BFK38 00A❸	17	30	33	36	–	10	0.472
new **BFK50 00A❸**	22	40	41	46	–	5	1.080
new **BFK65 00A❸**	26	45	50	56	–	5	1.080
new **BFK80 00A❸**	30	50	56	65	–	5	1.080
11 BF80K 00❸	34	60	65	70	–	5	1.470
new **11 BF110K 00❸❹**	45	75	80	100	–	5	1.470

❶ To use the contactor in the delta, consult our Customer Service office, see contact details on front cover.
❷ NO auxiliary contacts available.
❸ The order code must be completed either with the coil voltage digit if 50/60Hz or with the coil voltage digit followed by the number 60 if 60Hz.
Standard voltages are:
– AC 50-60Hz 024 / 048 / 110 / 230 / 400VAC
– AC 60Hz 024 60 / 048 60 / 120 60 / 220 60 / 230 60 / 460 60 / 575 60 (V).
Example: BFK09 10 A230 for contactor BFK09 with one NO contact and 230VAC 50/60Hz coil.
BFK09 10 A460 60 for contactor BFK09 with one NO contact and 460VAC 60Hz coil.
❹ Note: the maximum thermal current Ith of the BF110K contactor is 125A.

Operational characteristics

Type	IEC rated operational current ≤440V	IEC - UL/CSA protection fuse gG-SC
	[A]	[A]
BFK09	12	16
BFK12	18	25
BFK18	23	40
BFK26	30	40
BFK32	36	63
BFK38	43	63
BFK50	58	80
BFK65	65	100
BFK80	75	125
BF80K	90	125
BF110K	110	160

Ambient operating temperature: ≤50°C. For ambient temperatures higher than 50°C and up to 70°C, the maximum operating power values indicated in the table must be reduced by a percentage equal to the difference between the operating ambient temperature and 50°C.
E.g.: Using a BFK26 00 contactor at the ambient temperature of 60°C, the maximum operating power (at 400V) of the contactor will be equal to 20kvar – 10% = 18kvar.
Operating cycle: ≤120 cycles/h
Electrical life: ≥400,000 cycles.

Add-on auxiliary contacts
The following contact blocks, can be fitted on the BFK contactors: BFX12..., G418..., G481..., G482... and G218.

Certifications and compliance
Certification obtained: CCC, EAC; UL Listed for USA and Canada (cULus - File E93602), as Motor Controllers - Magnetic Capacitive Switches.
Compliant with standards: IEC/EN 60947-1, IEC/EN 60947-4-1, UL508, CSA C22.2 n° 14.
Plastic materials are compliant with standards IEC/EN 60335; for BFK versions only, add suffix V260 to the standard product order code.

Kit to assemble BFK contactors

Order code	For contactor	Qty per pkg	Wt
		n°	[kg]
11 G460	BF09 10A - BF12 10A - BF18 10A - BF26 00A - BF32 00A - BF38 00A	10	0.072
new **BFX10K3**	BF50 00A - BF65 00A - BF80 00A	10	0.078
11 G464	BF80 00 - BF110 00	10	0.080



General characteristics
To optimise contactor stock management, a kit is available to transform normal three-pole contactors into BFK types for power factor correction. The table to the left indicates which kits to purchase depending on the standard contactor in stock.

Control relays BG00 type



11 BG00...



11 BGF00...

Order code	Configuration and n°of contacts❺		Quantity per pkg.	Wt
	NO	NC	n°	[kg]
AC COIL. Terminals: clamp screw.				
11 BG00 40 A❶	4	0	1	0.170
11 BG00 31 A❶	3	1	1	0.170
11 BG00 22 A❶	2	2	1	0.170
Terminals: Faston.				
11 BGF00 40 A❶	4	0	1	0.160
11 BGF00 31 A❶	3	1	1	0.160
11 BGF00 22 A❶	2	2	1	0.160
DC COIL. Terminals: clamp screw.				
11 BG00 40 D❷	4	0	1	0.175
11 BG00 31 D❷	3	1	1	0.175
11 BG00 22 D❷	2	2	1	0.175
Terminals: Faston.				
11 BGF00 40 D❷	4	0	1	0.165
11 BGF00 31 D❷	3	1	1	0.165
11 BGF00 22 D❷	2	2	1	0.165
DC COIL. Low-consumption (2.3W). Terminals: clamp screw.				
11 BG00 40 L❸	4	0	1	0.175
11 BG00 31 L❸	3	1	1	0.175
11 BG00 22 L❸	2	2	1	0.175
Terminals: Faston.				
11 BGF00 40 L❸	4	0	1	0.165
11 BGF00 31 L❸	3	1	1	0.165
11 BGF00 22 L❸	2	2	1	0.165

Control relays BF00 type



BF00... A...



BF00... D...
BF00... L...

Order code	Configuration and n°of contacts ❺		Quantity per pkg.	Wt
	NO	NC	n°	[kg]
AC COIL. Terminals: clamp screw.				
BF00 40 A❶	4	0	1	0.340
BF00 31 A❶	3	1	1	0.340
BF00 22 A❶	2	2	1	0.340
BF00 04 A❶	0	4	1	0.340
DC COIL. Terminals: clamp screw.				
BF00 40 D❷❹	4	0	1	0.470
BF00 31 D❷❹	3	1	1	0.470
BF00 22 D❷❹	2	2	1	0.470
BF00 04 D❷❹	0	4	1	0.470
DC COIL. Low consumption (2.4W). Terminals: clamp screw.				
BF00 40 L❸❹	4	0	1	0.470
BF00 31 L❸❹	3	1	1	0.470
BF00 22 L❸❹	2	2	1	0.470
BF00 04 L❸❹	0	4	1	0.470

❶ The order code must be completed either with the coil voltage digit if 50/60Hz or with the coil voltage digit followed by the number 60 if 60Hz.
Standard voltages are:
– AC 50760Hz 024 / 048 / 110 - 230 / 400V
– AC 60Hz 024 60 / 048 60 /- 120 60 / 220 60 / 230 60 / 460 60 / 575 60 (V).
Example: 11 BG00 40 A230 (auxiliary mini-contactor 4 NO auxiliary contacts supplied at 230VAC 50/60Hz).
BF00 40 A460 60 (auxiliary contactor with 4 NO auxiliary contacts supplied at 460VAC 60Hz).

❷ Complete the order code with coil voltage digit. Standard voltages are:
– DC 012 / 024 / 048 / 060 / 110 / 125 / 220V.
Example: BF00 40 D012 (auxiliary contactor with 4 NO auxiliary contacts supplied at 12VDC).

❸ Low-consumption version. Complete the order code with coil voltage digit.
Standard voltages are:
– DC 024 / 048V.
Example: 11 BG00 40 L024 (low-consumption auxiliary mini-contactor with 4 NO auxiliary contacts supplied at 24VDC).

❹ Maximum combinations of add-on blocks are given on page 2-19.

❺ All contacts are highly conductive.

Operational characteristics
- IEC rated insulation voltage Ui: 690V
- IEC rated conventional free air thermal current Ith: 10A
- UL/CSA and IEC/EN 60947-5-1 designation:
  - BG types: A600-Q600
  - BF types: A600-P600
- Low-consumption version of BG types cannot accept additional contacts.

NOTE: No coil change or replacement is possible.

Certifications and compliance
Certification obtained: CCC, EAC, UL Listed for USA and Canada (cULus - File E93602), as Motor Controllers - Auxiliary contactors for all; RINA for BF00 types.
Compliant with standards: IEC/EN 60947-1, IEC/EN 60947-5-1, UL508, CSA C22.2 n° 14.
Plastic materials are compliant with standards IEC/EN 60335; for BF00 version only, add suffix V260 to the standard product order code.
Example: BF00 40 A230 V260 for BF00 control relay having 4 NO auxiliary contacts and 230VAC 50/60Hz coil with compliant plastic materials.

NOTE: The BF00...D and BF00...L types have a standard supplied built-in TVS (Transient Voltage Suppressor).

2



11 BGX10... (20-11-02)
11 BGX11 11



11 BGX10... (40-31-22-13-04)
11 BGX11 22



11 BGXF...



11 BGX77... -
11 BGX78 225 -
11 BGX79...



11 BGX50 00

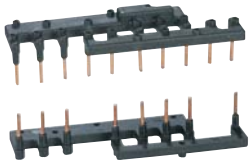

11 SMX90 21
11 SMX90 22

Order code	Characteristics	Max qty per contactor	Qty per pkg	Wt
		n°	n °	[kg]
Auxiliary contacts. Screw terminals.				
11 BGX10 02❶	2NC	1	10	0.021
11 BGX10 11❶	1NO + 1NC	1	10	0.021
11 BGX10 20❶	2NO	1	10	0.021
11 BGX10 04❷	4NC	1	10	0.028
11 BGX10 13❷	1NO + 3NC	1	10	0.028
11 BGX10 22❶	2NO + 2NC	1	10	0.028
11 BGX10 31❶	3NO + 1NC	1	10	0.028
11 BGX10 40❶	4NO	1	10	0.028
Auxiliary contacts for reversing and changeover assemblies. Screw terminals.				
11 BGX11 11❸	1NO + 1NC	1	10	0.021
11 BGX11 22❸	2NO + 2NC	1	10	0.028
Auxiliary contacts. Faston terminals.				
11 BGXF10 02❶	2NC	1	10	0.021
11 BGXF10 11❶	1NO + 1NC	1	10	0.021
11 BGXF10 20❶	2NO	1	10	0.021
11 BGXF10 04❷	4NC	1	10	0.028
11 BGXF10 13❷	1NO + 3NC	1	10	0.028
11 BGXF10 22❶	2NO + 2NC	1	10	0.028
11 BGXF10 31❶	3NO + 1NC	1	10	0.028
11 BGXF10 40❶	4NO	1	10	0.028
Mechanical interlock.				
11 BGX50 00❶	For BG...A and BG...D	1	10	0.008
Quick connect surge suppressors.				
11 BGX77 048	≤48VAC/DC (Varistor)	10		0.007
11 BGX77 125	48...125VAC/DC (Varistor)	10		0.007
11 BGX77 240	125...240VAC/DC (Varistor)	10		0.007
11 BGX78 225	≤225VDC (Diode)	10		0.007
11 BGX79 048	≤48VAC (Resistor-Capacitor)	10		0.007
11 BGX79 125	48...125VAC (Resistor-Capacitor)	10		0.007
11 BGX79 240	125...240VAC (Resistor-Capacitor)	10		0.007
11 BGX79 415	240...415VAC (Resistor-Capacitor)	10		0.007
Modular shroud.				
11 BGX80 00❹	IP40 front protection	20		0.006
Paralleling links.				
11 G323❺	For 2 poles	10		0.009
11 G324		10		0.009
11 G325❺	For 4 poles	10		0.014
11 G326		10		0.014
Rigid connecting kits.				
11 SMX90 21❻	Rigid connections for star-delta starter with BG... mini-contactors	10		0.040
11 SMX90 22❻	Rigid connections for reversing switches with BG... mini-contactors	1		0.026

❶ Cannot be used with BG...L types.
❷ Cannot be used with BG...D and BG...L types.
❸ Suitable for left-hand mini-contactor only of BGT and BGTP reversing and BGC changeover assemblies.
❹ The shroud can be used with BG... types with screw termination only and with no auxiliary contacts, surge suppressor or mechanical interlock mounted. It raises the front degree of protection of the mini-contactor when these are used in consumer switchboards.
❺ Cannot be used with BGX80 00 shroud.
❻ Contactors with one NC auxiliary contact, 01 type, are usually used.
The SM1 breaker can be directly fitted with rigid connector; type connection SM1X30 40P for SM1P... breaker and connection SM1X30 40R for SM1R... breaker.
The relay cannot be directly mounted on the contator. Use the RF38 type and the RFX38 04 independent mounting base.

Operational characteristics

Type			BGX10... BGX11...	BGXF10...
IEC rated conventional free air thermal current Ith		A	10	10
IEC rated insulation voltage Ui		V	690	690
Terminals	Screw		M3	Faston 1x6.3mm 2x2.8mm
	Width	mm	6.9	6.9
Tightening torque		Nm	0.8...1	—
		lbin	7...9	—
Conductor section maximum (with 1 or 2 cables)	flexible without lug	mm^2	2.5	2.5
	flexible with lug	mm^2	2.5	2.5
	AWG	n°	14	14
UL/CSA and IEC/EN 60947-5-1 designation		AC	A600	A600
		DC	Q600	Q600
Mechanical life (million)		cycles	20	20

SM1 breaker - mini-contactor connecting kit
See page 1-7.

Certifications and compliance
Certifications obtained:

Type	UL	cULus	EAC	CCC
BGX10...	—	●	●	●
BGX11...	—	●	●	●
BGXF10...	—	●	●	—
BGX50 00	—	●	●	—
BGX7...	—	●	●	—
BGX80 00	—	—	●	—
G32...	—	—	●	—
SMX90...	ᴿᵁ	—	—	—

● Certified products;

ᴿᵁ - UL Recognized for USA only (File E197069) as Panel and Switchboard Accessories - Component.
Products having this type of marking are intended for use as components of complete workshop-assembled equipment.
cULus - UL Listed for USA and Canada (cULus - File E93601) as Auxiliary Devices - Component.

Compliant with standards: UL508, CSA C22.2 n° 14, IEC/EN 60947-1; IEC/EN 60947-5-1 for auxiliary contacts.

Combinations: mounting position on BG...A and BG...D mini-contactors

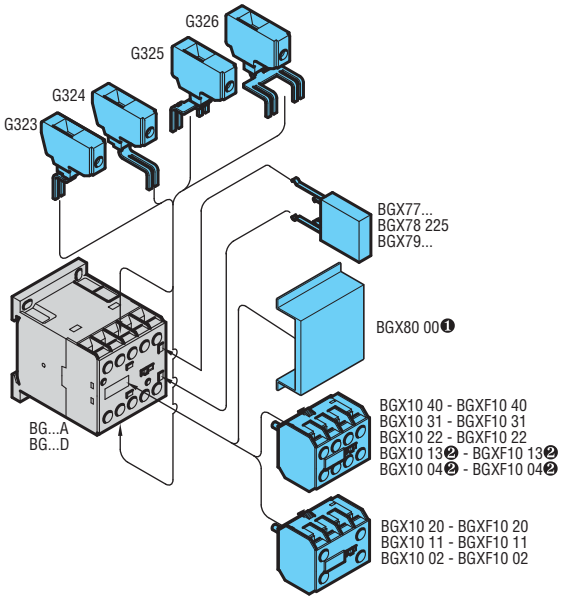

❶ Not suitable for mini-contactors BG... with auxiliaries contacts BGX10..., surge suppressor BGX7... and interlock BGX50 00.
❷ Not suitable for BG...D types.

Combinations: mounting position on BG...L mini-contactors

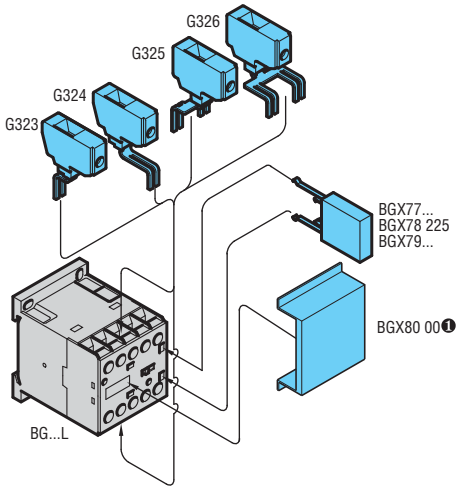

Combinations for reversing and changeover contactors assembled with BG...A and BG...D types

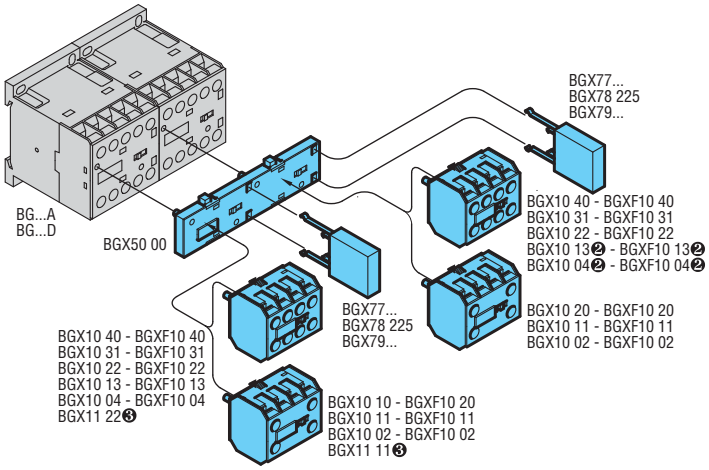

❷ Not suitable for BG...D types.
❸ For left-hand mini-contactor of BGT, BGTP and BGC contactor assemblies only.
See page 4-5.

Connections for reversing contactor assembly

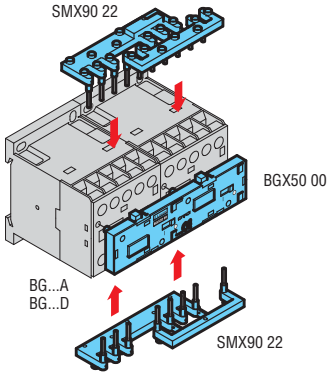

Connections for star-delta assembly

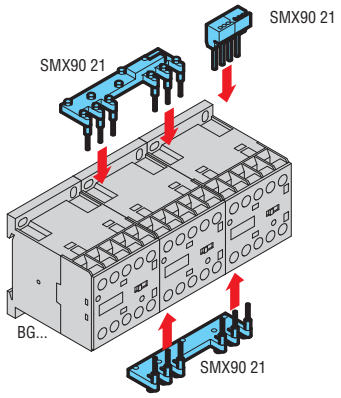

2



BFX10...



11 G484...



BFX10...



11 G418...



11 G218



11 G481...
11 G482



11 G428...



BFX12...



11 G485...
11 G486...
11 G487

Order code	Characteristics	Max qty per cont.	Qty per pkg.	Wt
		n°	n°	[kg]
Auxiliary contacts with front center mounting ❷. Screw terminals.				
BFX10 02❶	2NC	1	5	0.030
BFX10 11❶	1NO + 1NC	1	5	0.030
BFX10 20❶	2NO	1	5	0.030
11 G484 03❶	3NC	1	5	0.039
11 G484 12❶	1NO + 2NC	1	5	0.039
11 G484 21❶	2NO + 1NC	1	5	0.039
11 G484 30❶	3NO	1	5	0.039
BFX10 04	4NC	1	5	0.048
BFX10 13	1NO + 3NC	1	5	0.048
BFX10 22	2NO + 2NC	1	5	0.048
BFX10 31	3NO + 1NC	1	5	0.048
BFX10 40	4NO	1	5	0.048
BFX10 11 11	1NO+1NC and 1EM+1LB❸❹	1	5	0.048
Auxiliary contacts with front lateral mounting. Screw terminals❻.				
11 G418 01	1NC	2	10	0.014
11 G418 01D	1LB❸	2	10	0.014
11 G418 10	1NO	2	10	0.014
11 G418 10A	1EM❹	2	10	0.014
Auxiliary contacts with front lateral mounting. Faston terminals❼.				
11 G218	1NO or 1NC reversible	2	10	0.011
11 G481 02	2NC	2	10	0.013
11 G481 11	1NO + 1NC	2	10	0.013
11 G481 20	2NO	2	10	0.013
11 G482❷❺	Changeover contact	2	10	0.013
Adapter for auxiliary contact side mounting.				
11 G280	for G218	2	10	0.008
11 G419	for G418	2	10	0.010
11 G483	for G481 and G482	2	10	0.010
Auxiliary contacts with low side mounting. Screw terminals.				
BFX12 02❷	2NC for BF00, BF09...BF80	2	5	0.044
BFX12 11❷	1NO+1NC for BF00, BF09...BF80	2	5	0.044
BFX12 20❷	2NO for BF00, BF09...BF80	2	5	0.044
11 G428 01	1NC	2	10	0.024
11 G428 01D	1LB❸	2	10	0.024
11 G428 10	1NO	2	10	0.024
11 G428 10A	1EM❹	2	10	0.024
Delayed auxiliary contacts 1NO + 1NC (pneumatic operation) on energisation for front center mounting ❶❽. Screw terminals.				
11 G485 3	3s	1	1	0.040
11 G485 6	6s	1	1	0.040
11 G485 15	15s	1	5	0.040
11 G485 30	30s	1	5	0.040
11 G485 60	60s	1	5	0.040
11 G485 120	120s	1	1	0.040
Delayed auxiliary contacts 1NO + 1NC (pneumatic operation) on de-energisation for front center mounting ❶❽. Screw terminals.				
11 G486 3	3s	1	1	0.040
11 G486 6	6s	1	1	0.040
11 G486 15	15s	1	5	0.040
11 G486 30	30s	1	5	0.040
11 G486 60	60s	1	5	0.040
11 G486 120	120s	1	1	0.040
11 G487	70ms	1	1	0.040

Operational characteristics for add-on auxiliary contacts

Type		G418❻ G428❻ G485❽ G486❽ G487❽	G484 BFX10 BFX12	G218❼ G481❼	G482❺
IEC conventional free air thermal current Ith	A	10	10	10	0,1❺
IEC rated insulation voltage Ui	V	690	690	690	690
Terminals Screw		M3.5	M3	—	—
Width	mm	7	7	—	—
Faston		—	—	1x6.35 2x2.8	1x6.35 2x2.8
Tightening torque	Nm	0.8...1	0.8...1	—	—
	lbin	7...9	7...9	—	—
Conductor section maximum with (1 or 2 cables) flexible w/o lug	mm²	2.5	2.5	—	—
flexible c/w lug	mm²	2.5	2.5	2.5	2.5
AWG	n°	14	14	14	14
Terminal protection per IEC/EN60529		IP20 ❻❽	IP20	IP20❼	IP20❺
UL/CSA and IEC/EN 60947-5-1 designation	AC	A600	A600	A600	A600
	DC	P600❻	Q600	P600	P600
Mechanical life (million)	cycles	10❽	10	10	10

SM1 breaker - contactor connecting kit
See page 1-5.

Maximum assembly combination of add-on blocks
See pages 2-19 and 2-22...25.

Certifications and compliance
Certifications obtained:

Type	UL	cULus	CSA	EAC	CCC
BFX10...	—	●	—	●	●
BFX12...	—	●	—	●	—
G218	ᴿᵁᴸ	—	●	●	—
G418..., G428...	ᴿᵁᴸ	—	●	●	—
G481...	ᴿᵁᴸ	—	●	●	—
G482	ᴿᵁᴸ	—	●	●	—
G484...	ᴿᵁᴸ	—	●	●	—
G485...	ᴿᵁᴸ	—	●	●	—
G486...	ᴿᵁᴸ	—	●	●	—
G487...	ᴿᵁᴸ	—	●	●	—

● Certified products; pending for BFX10 1111
ᴿᵁᴸ - UL Recognized for USA only (File E93601) as Auxiliary Devices - Component.
Products having this type of marking are intended for use as components of complete workshop-assembled equipment.
cULus - UL Listed for USA and Canada (cULus - File E93601) as Auxiliary Devices.
CSA - CSA certified for Canada only (File 54332) as Auxiliary Devices for motor controllers.

Add-on auxiliary contacts are compliant with the following standards: IEC/EN 60947-1, IEC/EN 60947-5-1, UL508, CSA C22.2 n° 14.

❶ The contacts can also be fitted on B type contactors using the adapter G358. See pages 2-26 and 2-28.
❷ Highly conductive contacts.
❸ Normally closed late-break contact.
❹ Normally open early-make contact.
❺ Gold-plated contacts inside tight casing for use in pollutant environments. The Ith value refers to 125VAC and 30VDC. IEC IP20 protection is warranted to equipment wired with insulated Faston terminals.
❻ IEC IP20 protection is warranted to equipment wired with minimum 0.75mm² conductor section. Designation in DC is Q600 for G418 and G419 types.
❼ IEC IP20 protection is warranted to equipment wired with insulated Faston terminals.
❽ IEC IP20 protection is warranted to equipment wired with minimum 1mm² conductor section. Mechanical life is 3 million cycles.

BF00 A, BF09 A...BF80 A, BF40 E...BF80 E BF95 C...BF110 C

Maximum assembly combination for alternating-current contactors BF00 A, BF09 A...BF110.
Maximum assembly combination for alternating/direct-current contactors BF40 E...BF80 E.
Maximum assembly combination for direct-current contactors BF80 C...BF110 C.

			Front centre mount					Front lateral mount			Side mount	
								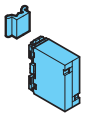				
			BFX10 02	BFX10 04	G485...	G222...❹		BFX50 02	G269 2	G418...	G428...	BFX12 02
			BFX10 11	BFX10 13	G486...	G272...❹		BFX50 03 ❶		G218	G419+ G418...	BFX12 11
										G481...		
			BFX10 20	BFX10 22	G487					G482	G280+ G218	BFX12 20
				BFX10 31							G483+ G481...	BFX50 00 ❸❽
				BFX10 40						1 type only G318... G319 225 G322...	G483+ G482	BFX50 01 ❸❽
			n° of blocks 1 type only			n° of blocks		n° of blocks 1 type only		n° of blocks	n° of blocks	n° of blocks
Contactors	Control relay	BF00 A	1	1	1	1 ❺	OR +	1	—	1 or 2 ❶	1 or 2 ❶	1 ❸
	Three poles	BF09 A...BF25 A	1	1	1	1 ❺		1	—	1 or 2 ❶	1 or 2 ❶	1 ❸
		BF26 A...BF38 A	1	1	1	1 ❺		1	—	1 or 2 ❶	1 or 2 ❶	1 ❸
		BF40 A...BF110	1	1	1	1 ❻		—	1	1 or 2 ❶	2	1 ❸
		BF40 E...BF80 E	1	1	1	1 ❻		—	1	1 or 2 ❶	2	1 ❸
		BF95 C...-BF110 C	1	1	1	1 ❻		—	1	1 or 2	2	—
	Four poles	BF09 A...BF25 A	1	1	1	1 ❺		1	—	1 or 2	1 or 2 ❶	1 ❸
		BF26 A...BF38 A	1	1	1	1 ❺		1 ❷	—	1 ❶	1 or 2 ❶	1 ❸
		BF40 A...BF80 A	1	1	1	1 ❻		—	1	1 or 2	2	1 ❸
		BF40 E...-BF80 E	1	1	1	1 ❻		—	1	1 or 2	2	2

❶ Cannot be fitted with BFX10... with 4 contacts and G222.
❷ To fit the mechanical interlock, the add-on fourth pole needs to be mounted on the left side of the one of the contactors.
❸ One only side-mount block can be fitted on each contactor whenever the BFX50 0... interlock is mounted.
❹ One BFX10... or delayed G48... contact block can be mounted on the G222 or G272 mechanical latch.
❺ G222 mechanical latch.
❻ G272 mechanical latch.
❽ For BF40 80 code BFX53 00 or BFX53 01.

BF00 D, BF09 D...BF38 D, BF00 L, BF09 L...BF38 L

Maximum assembly combination for direct-current contactors BF00 D, BF09 D...BF38 D
Maximum assembly combination for direct-current contactors BF00 L, BF09 L...BF38 L with low absorption

			Front centre mount										Front lateral mount		Side mount	
																
			BFX10...			BFX10...				G485...	G222... ❹		1 type only BFX50...			BFX12... ❸
			...02	...11	...20	...04	...13	...22	...31	40	G486... G487		...02	...03 ❶	...00	...01
			n° of blocks 1 type only								n° of blocks		n° of blocks 1 type only			
Contactors	Control relay	BF00 D	1			1		1		1	1	OR +	1	1	1	1
		BF00 L	1			—		1		—	1		1	1	—	—
	Three poles	BF09 D-BF25 D	1			1		1		1	1		1	1	1	1
		BF26 D-BF38 D	1			1		1		1	1		1	1	1	1
		BF09 L-BF25 L	1			—		1		—	1		1	1	—	—
		BF26 L-BF38 L	1			—		1		—	1		1	1	—	—
	Four poles	BF09 D-BF25 D	1			1		1		1	1		1	1	1	1
		BF26 D-BF38 D	—	1		—		—		—	1		1❼	1❼	1	1
		BF09 L-BF25 L	1			—		1		—	1		1	1	—	—
		BF26 L-BF38 L	—	1	—	—		—		—	—		1❼	1❼	—	—

❶ Mounting of BFX50 03 interlock is not possible when BFX10... block with 4 contacts and G222 latch are mounted.
❸ One only side-mount block can be fitted on each contactor whenever the BFX50 0... interlock is mounted.
❹ One BFX10... or delayed G48... contact block can be mounted on the G222 or G272 mechanical latch.
❼ To fit the mechanical interlock, the add-on fourth pole needs to be mounted on the left side of the one of the contactors.
For other assembly combination, consult Customer Service (Tel. 035 4282422; E-mail: service@LovatoElectric.com).

2



BFX42
BFXD42



BFX50 00
BFX53 00



BFX50 01
BFX53 01



BFX50 02



BFX50 03
BFX53 03
11 G269 2



11 G222...
11 G272...



11 G454
11 G455



BFX77...
BFX79...



11 G318...
11 G319 225
11 G322...



11 RE244

Order code	Characteristics	Max qty per cont.	Qty per pkg	Wt
		n°	n°	[kg]
Fourth pole.				
BFX42	For BF26 A, BF32 A, BF38 A	1	1	0.100
BFXD42	For BF26 D, BF32 D, BF38 D, BF26 L, BF32 L, BF38 L	1	1	0.108
new **BFX43**	For BF40 A... BF80 A and BF40 E...BF80 E	1	1	0.150
Mechanical interlock.				
BFX50 00❶	Side mount for BF00, BF09...BF38	1	5	0.039
BFX50 01❶	Side mount with 2NC contacts for BF00, BF09...BF38	1	5	0.052
BFX50 02	Front mount, low profile for BF00, BF09...BF38	1	5	0.006
BFX50 03	Front mount for BF00, BF09...BF38	1	5	0.023
BFX89 10	Spacer for interlocking BF09...BF38 AC/DC with types in DC	1	10	0.017
BFX53 00	Side mount for BF40...BF80 A/E	1	5	0.039
new **BFX53 01**	Side mount with 2NC contacts for BF40...BF80 A/E	1	5	0.052
BFX53 03	Front mount for BF40...BF80 A/E	1	5	0.034
11 G269 2	Front mount for BF95...BF110	1	5	0.034
Mechanical latch. Screw terminals				
11 G222❷	For BF00, BF09...BF38	1	1	0.070
11 G272❷	For BF40...BF110	1	1	0.070
Manual closing mechanism.				
11 G454	For BF00, BF09...BF38	1	1	0.021
11 G455	For BF40...BF110	1	1	0.021
Quick connect surge suppressors for BF00A, BF09A...BF80A contactors.				
BFX77 048	≤48VAC/DC (Varistor)	5		0.012
BFX77 125	48...125VAC/DC (Varistor)	5		0.012
BFX77 240	125...240VAC/DC (Varistor)	5		0.012
BFX79 048	≤48VAC (Resistor-Capacitor)	5		0.012
BFX79 125	48...125VAC (Resistor-Capacitor)	5		0.012
BFX79 240	125...240VAC (Resistor-Capacitor)	5		0.012
BFX79 415	240...415VAC (Resistor-Capacitor)	5		0.012
Surge suppressor for BF95...BF110 contactors, front mount. Faston terminals.				
11 G318 48	≤48VAC/DC (Varistor)	10		0.010
11 G318 125	48...125VAC/DC (Varistor)	10		0.010
11 G318 240	125...240VAC/DC (Varistor)	10		0.010
11 G318 415	240...415VAC/DC (Varistor)	10		0.010
11 G319 225	≤225VDC (Diode)	10		0.010
11 G322 48	≤48VAC (Resistor-Capacitor)	10		0.010
11 G322 220	48...240VAC (Resistor-Capacitor)	10		0.010
11 G322 380	240...415VAC (Resistor-Capacitor)	10		0.010
Suppressor mounting adapter for G318-G319-G322.				
11 RE244	For 35mm DIN rail	10		0.004

❶ Different sized contactors can be interlocked.
Example: BF09...BF25 with BF26...BF38.

❷ Replace with the digit of the voltage if 50 or 60Hz and with the letter C followed by the digit of the voltage if DC.
Standard voltages are:
– AC 50/60Hz 24 (indicate 24) - 48 (indicate 48) - 110...125 (indicate 110) 220...240 (indicate 220) - 380...415V (indicate 380).
– DC 12 (indicate 12) - 24 (indicate 24) - 48 (indicate 48) 110...125 (indicate 110) - 220...240V (indicate 220).

Operational characteristics

Type		BFX42 BFXD42	BFX43	BFX50 01
IEC conventional free air thermal current Ith	A	56	115	10
IEC rated insulation voltage Ui	V	690	1000	690
Terminals: Screw		M4	M6	M3
Width	mm	12.5	9.6	7
Tightening torque	Nm	2.5...3	4...5	0.8...1
	lbin	21.6...26.4	35.4...44.2	7...9
Conductor section maximum with 1 or 2 cables				
flexible w/o lug	mm^2	16	35	2.5
flexible c/w lug	mm^2	16	35	2.5
AWG	n°	6	2	14
Terminal protection per IEC/EN60529		IP20❸	IP20❸	IP20
UL/CSA and IEC/EN 60947-5-1 designation	AC	—	—	A600
	DC	—	—	Q600
Mechanical life (million)	cycles	10	15	10

Type			G222...	G272...
Rated control circuit voltage	AC (50/60Hz)	V	24...415	24...415
	DC	V	12...240	12...240
Power consumption with control:	AC	VA	40	40
	DC	W	70	70
Minimum energising:				
drop-out		ms	10	10
pick-up		ms	100	200
Tightening torque		Nm	0.8...1	0.8...1
		lbin	7...9	7...9
Conductor section Maximum with 1 or 2 cables				
flexible w/o lug		mm^2	4	4
flexible c/w lug		mm^2	2.5	2.5
AWG		n°	14...12	14...12

❸ The condition is front IP20 protection.

Maximum assembly combination of add-on blocks
See pages 2-19, 2-22...25.

Certifications and compliance
Certifications obtained:

Type	UL	cULus	CSA	EAC
BFX42 - BFXD42 - BFXD43	—	●	—	●
BFX50...	—	●	—	●
BFX77...	—	●	—	●
BFX79...	—	●	—	●
G269 2	𝑹	—	●	●
G222...	𝑹	—	●	●
G272...	𝑹	—	●	●

● Certified products.
𝑹 - UL Recognized for USA only (File E93601) as Auxiliary Devices Component.
Products having this type of marking are intended for use as components of complete workshop-assembled equipment.
cULus - UL Listed for USA and Canada (cULus - File E93602) as Magnetic motor controllers.
CSA - CSA certified for Canada only (File 54332) as Auxiliary Devices for motor controllers.

Compliant with standards: IEC/EN 60947-1, IEC/EN 60947-5-1, UL508, CSA C22.2 n° 14.



BFX31…
BFX32…



BFX 80



BFX89 01



BFX89 02



11 G265



11 BA135
11 BA235



11 BA435



11 G231
11 G232



11 G285



11 G271



11 G288

Order code	Characteristics	Qty per pkg	Wt
		n°	[kg]
Rigid connecting kits for three-pole reversing contactor assembly.			
BFX31 01	For contactors BF09...BF25 side by side with BFX50 02 and BFX50 03 mechanical interlock	1	0.052
BFX31 02	For contactors BF09...BF25side by side with BFX50 00 or BFX50 01 mechanical interlock	1	0.054
BFX32 01	For contactors BF26...BF38 side by side with BFX50... mechanical interlock	1	0.060
Rigid connecting kits for star-delta starters.			
BFX31 31	For contactors BF09...BF25	1	0.058
BFX32 31	For contactors BF26...BF38	1	0.064
BFX32 32	For contactors BF26...BF38 (L/Δ) BF09...BF25 (λ)	1	0.064
Sealing cover.			
BFX80	Sealing cover for contactors BF00 and BF09 ... BF38	10	0.001
Screw fixing adapters for contactors.			
BFX89 01	Universal base to screw fix BF09...BF38 contactors	5	0.016
BFX89 02	Screw fixing brackets for BF09...BF38 contactors	10	0.002
Power terminal shroud.			
11 G265❶	IP20 protection for 3-pole BF95...BF110 types	10	0.015
Paralleling links.			
11 BA135	2 poles for contactors BF09...BF25 types	10	0.001
11 BA235	2 poles for contactors BF26...BF38 types	10	0.003
11 BA435	3 poles for contactors BF95...BF110 types	10	0.030
One-pole enlarged terminals.			
11 G231	1x6mm² for contactors BF09...BF25 types	12	0.009
11 G232	1x16mm² for contactors BF26...BF38 types	12	0.014
Three-pole enlarged terminals.			
11 G271	1x50mm² for contactors BF95...BF110 types ❷	10	0.142
Four-pole enlarged terminals.			
11 G288	1x50mm² for contactors BF95...BF110 types ❷	10	0.194
Auxiliary terminal.			
11 G285	For BF95...BF110 types	8	0.009
Marking element for BF00, BF09...BF110 contactors.			
BFX30	Blank label for writing	50	0.001

❶ Two pieces are required per contactor.
❷ An additional 1-50mm² conductor can be fitted in the contactor terminal.

Operational characteristics

Type		G231	G232	G285	G271 G288
Tightening torque	Nm	1.5-1.8	2.5-3	0.8-1	5
	lbin	13.2-18	7-9	7.9	44.3
Tool	Type	PH1	PH2	PH1	Metric Allen 4

Certifications and compliance
Certifications obtained: GOST for all; UL Listed, for USA and Canada (cULus - File E93602), under Magnetic Motor Controllers for BFX31 01, BFX31 02, BFX32 01, BFX31 31, BFX32 31 and BFX32 32 as rigid kits, G271 and G288 as enlarged terminal kits; EAC for all. Compliant with standards: IEC/EN 60947-1, UL508, CSA C22.2 n° 14.

Add-on blocks for AC and AC/DC contactors

2

Combinations: mounting position on BF00 A and BF09 A-BF110 contactors
Table with combinations: See page 2-19.

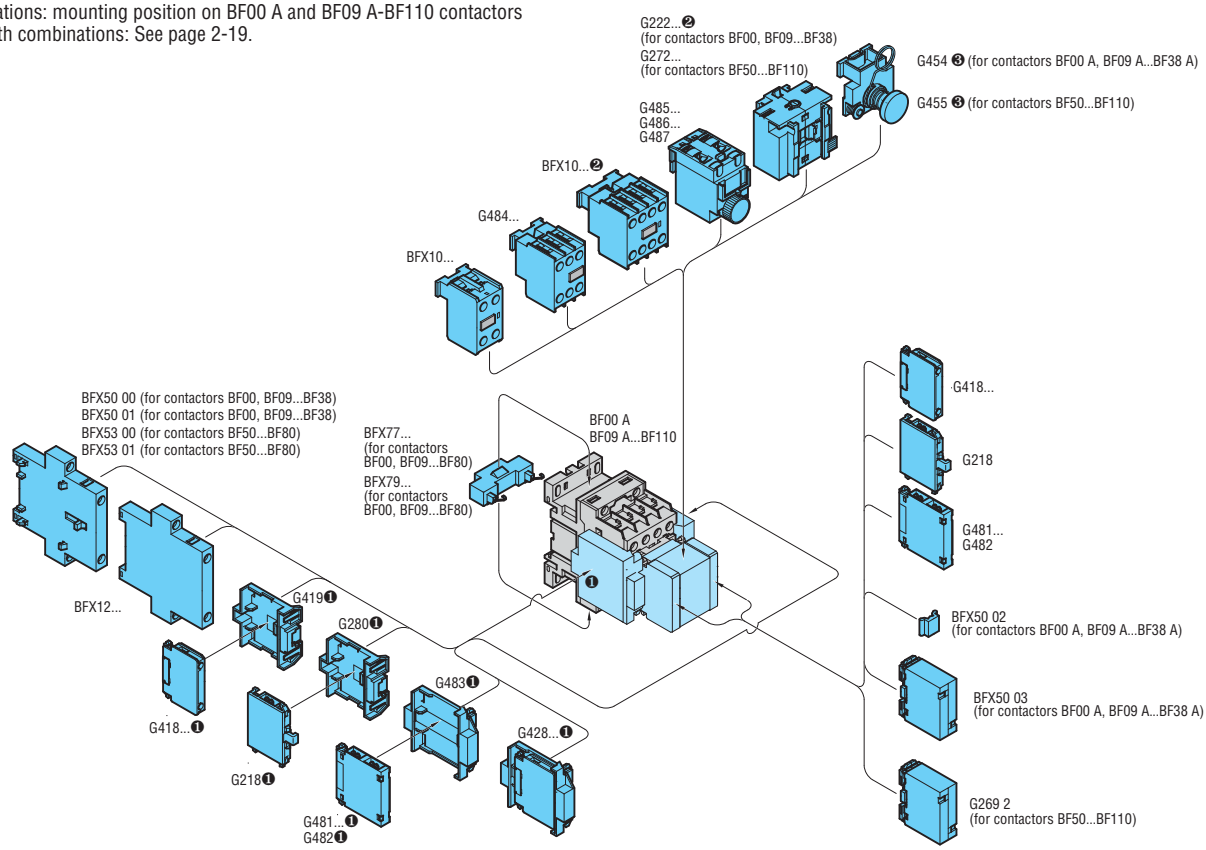

❶ Mounting is not possible if front lateral contacts or mechanical interlock BFX50 00 or BFX50 01 are mounted. BF00, BF09...38 cannot be fitted with BFX10 with 4 contacts or G222…
❷ Refer to the diagram below for use with G222… on contactors BF00 A and BF09 A...BF38 A and to the table of combinations on page 2-19.
❸ No add-on block can be mounted on front when the manual closing mechanism G454 or G455 is fitted.

Combinations: mounting position on BF00 A and BF09 A-BF38 A contactors with mechanical latch G222 fitted.
Table with combinations: See page 2-19.

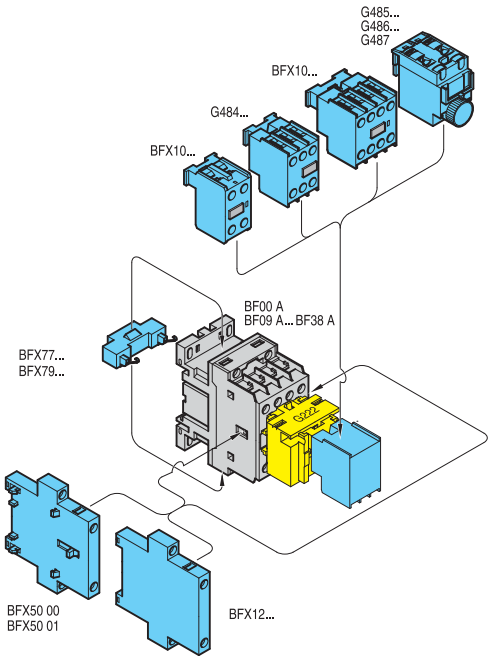

Combinations: mounting position on BF40 A..80 A, BF40 E...BF80 E, BF95...110 contactors with mechanical latch G272 fitted.
Table with combinations: See page 2-19.

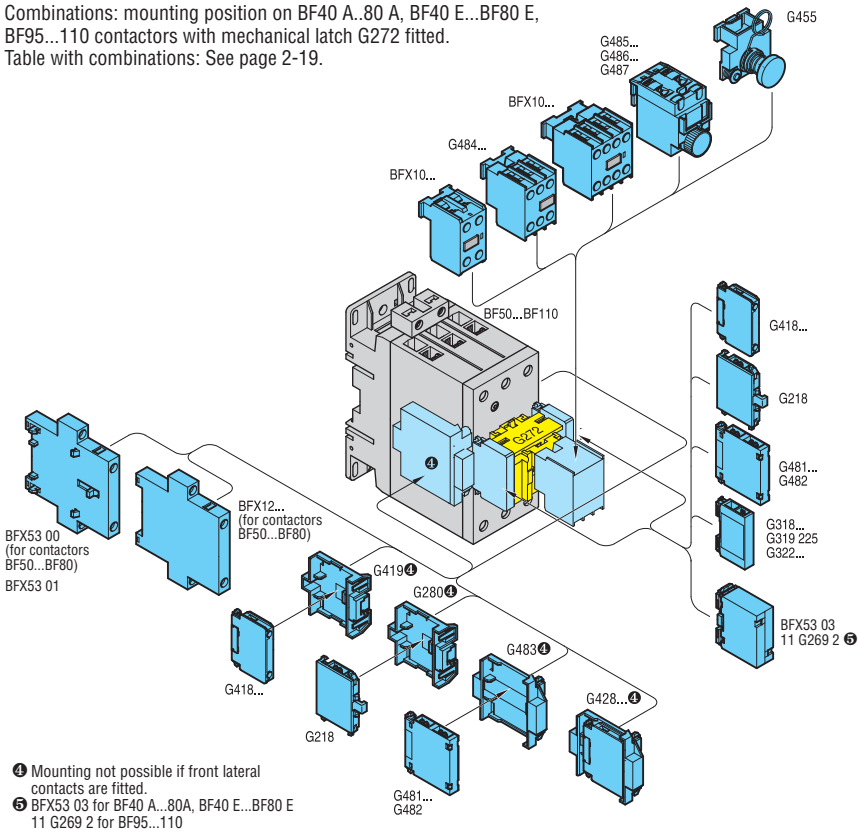

❹ Mounting not possible if front lateral contacts are fitted.
❺ BFX53 03 for BF40 A...80A, BF40 E...BF80 E
11 G269 2 for BF95...110

Add-on blocks for DC and DC low consumption contactors

Combinations: mounting position on BF00 and BF09-BF38, D and L versions
Table with combinations: See page 2-19.

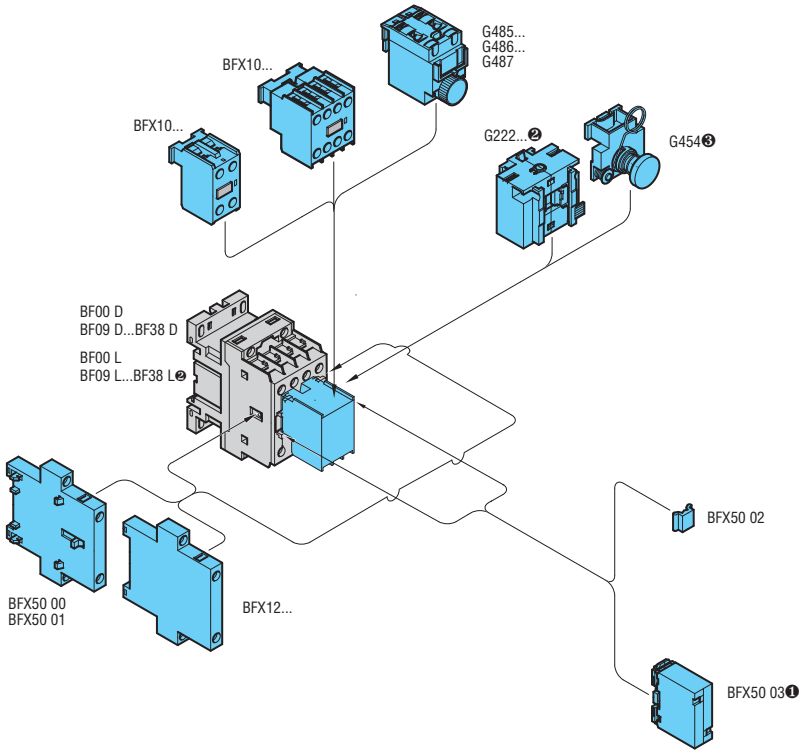

❶ Mounting not possible when the G222 mechanical latch is fitted.
❷ The G222 mechanical latch cannot be fitted on BF26 L - BF38 L four-pole types.
❸ No add-on block can be mounted on front when the G454 manual closing mechanism is fitted.

Combinations: mounting position on BF50 C - BF110 C contactors
with G272 mechanical latch fitted
Table with combinations: See page 2-19.

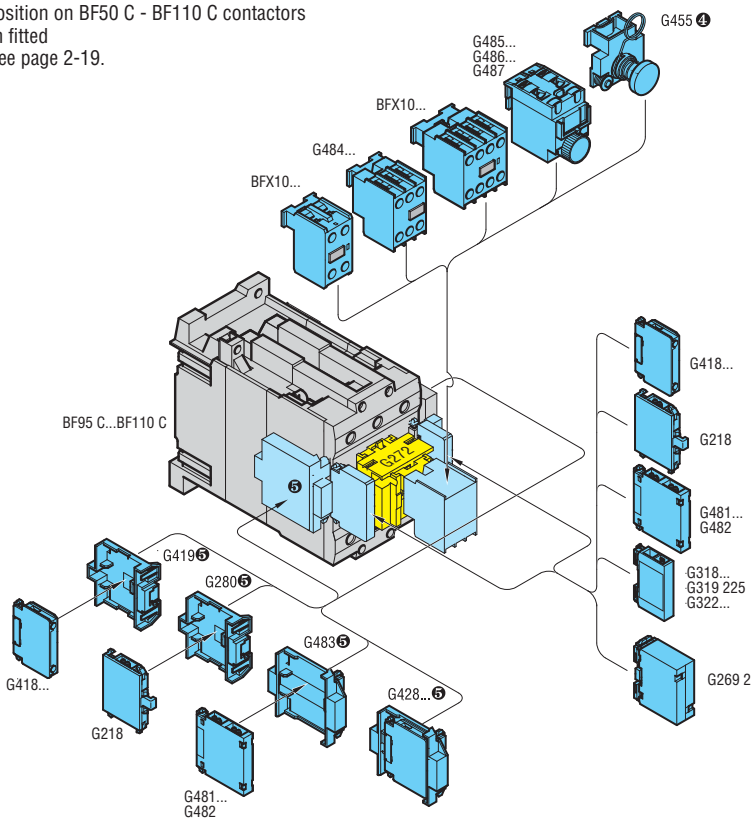

❹ No add-on block can be mounted on front when the G455 manual closing mechanism is fitted.
❺ Mounting not possible if front lateral contacts are fitted.

Accessories for
AC, DC and DC low consumption contactors

2

Combinations

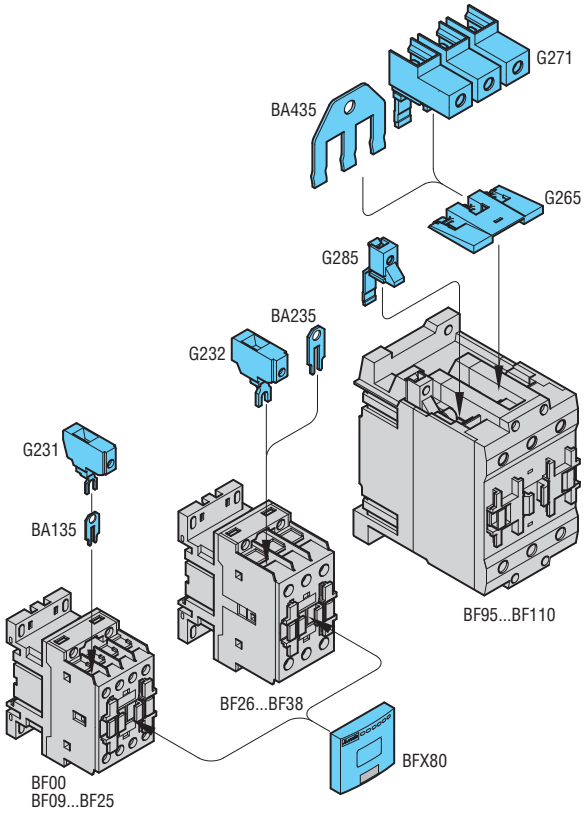

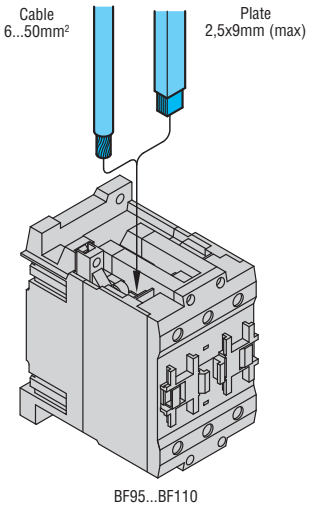

Accessories for AC, DC and DC low consumption contactors

Connections for reversing contactors with contactors BF09...BF25

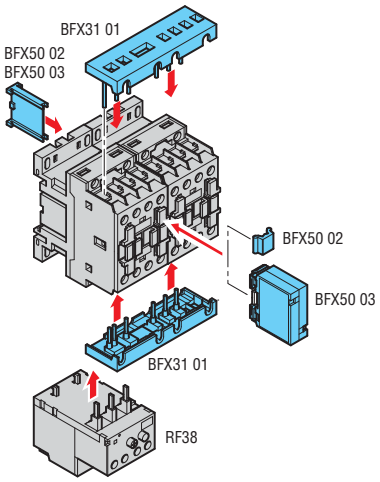

Connections for reversing contactors with contactors BF09...BF25 and mechanical interlock BFX50 00 or BFX50 01

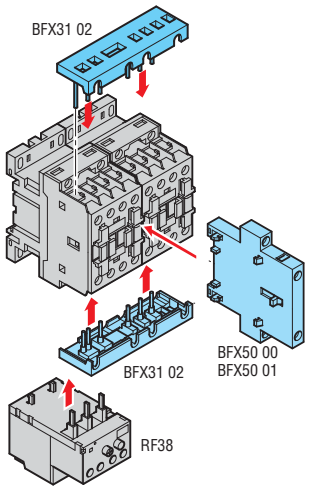

Connections for reversing contactors with contactors BF26...BF38

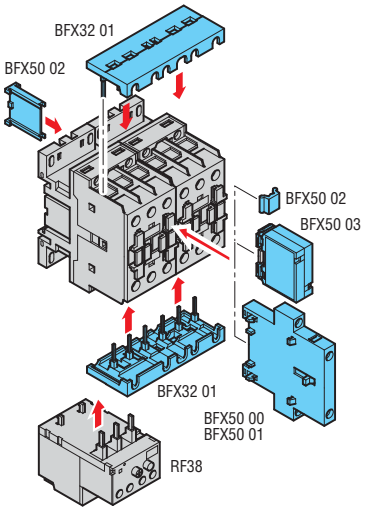

Rigid star-delta starter assembly connecting kits for BF09-BF25 contactors

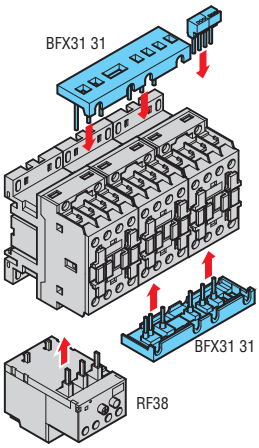

Rigid star-delta starter assembly connecting kits for BF26-BF38 contactors

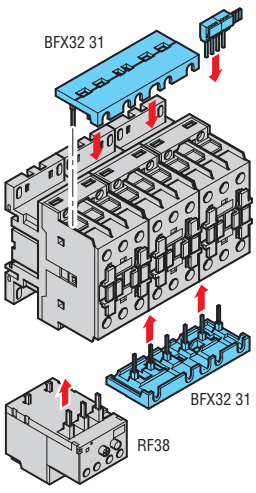

Rigid star-delta starter assembly connecting kits for BF26-BF38 (line-delta) and BF09-BF25 (star) contactors

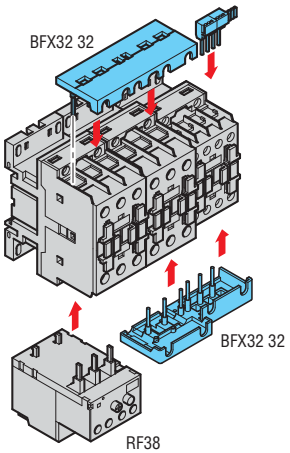

2

Add-on blocks



11 G350 - 11 G354



11 G358

Order code	Characteristics	Max qty per. contactor	Qty per pk	Wt sg
		n°	n°	[kg]
Auxiliary contacts. Faston terminals. Side mountinge.				
11 G350❶	2NO+1NC or 1NO+2NC reversible	4	1	0.082
11 G354❶	1NO+1NC	4	1	0.078
Adapter.				
11 G358	For fitting auxiliary contacts BFX10..., with 2 contacts, G484..., G485..., G486... and G487 on contactors B115...B630 1000 described on p. 2-28	4	5	0.050
Mechanical interlock.				
11 G355❷❸	Side by side	1	1	0.026
11 G356 1❷❹	One on top of other	1	1	0.120
11 G356 2❷❹	One on top of other	1	1	0.126
11 G356 3❷❹	One on top of other	1	1	0.132
11 G356 4❷❹	One on top of other	1	1	0.140
11 G356 5❷❹	One on top of other	1	1	0.146
11 G356 6❷❺	One on top of other	1	1	0.150
Mechanical latch.				
11 G495❻❼❽	For B115...B630❽	1	1	0.795

Accessories



11 G360 - 11 G361 - 11 G363



11 G527 - 11 G528 - 11 G529
11 G530



11 G370



11 G371

Order code	Characteristics	Qty per pkg	Wt
		n°	[kg]
Power terminal protection.			
11 G360❾	For contactor B115	6	0.026
11 G361❾	For contactors B145-B180	6	0.026
11 G363❾	For contactors B250-B310-B400	6	0.046
11 G527	For contactor B500	1	0.238
11 G528	For contactor B500 4	1	0.265
11 G529	For contactor B630	1	0.238
11 G530	For contactor B630 4	1	0.266
3 pole star connecting bars.			
11 BA1595	For contactors B115-B145-B180	1	0.065
11 BA1721	For contactors B250-B310-B400	1	0.140
11 BA1846	For contactors B500-B630	1	0.341
2 pole bars for parallel arrangement.			
11 BA1594	For contactors B115-B145-B180	1	0.095
11 BA1720	For contactors B250-B310-B400	1	0.149
11 BA1845	For contactors B500-B630	1	0.322
Terminal adapter.			
11 G370	To transform Faston terminals of auxiliary contacts and coils into screw terminals	10	0.003
11 G371	To transform both coil Faston terminals into screw terminals	5	0.022

❶ Only for B115-B145-B180-B250-B310-B400-B500-B630-B630 1000.
❷ Not suitable for B630 1000-B1250-B1600 ❺.
❸ For use with three-pole B630 1000, consult Customer Service for information; see contact details on inside front cover.
❹ Allowed distances see page 2-68.
❺ For contactors B1250 and B1600, two G356 6 mechanical interlocks are required.
❻ Replace with the digit of the voltages if 50 or 60 Hz or with the letter C followed by voltage if DC. The standard voltages are:
– AC 50/60Hz 48 - 110...125 (indicate 110) - 220...240 (indicate 220) - 380...415 (indicate 380)
– DC 48 - 110...125 (indicate 110) - 220...240 (indicate 220).
❼ It can be mounted only in contactors if predisposed for it. Consult Customer Service for information; see contact details on inside front cover.
❽ Not suitable for B310 and B310 4.
❾ Provided for one pole terminal only. Example: For three-pole contactors, purchase 3 pieces for the upper terminals only or 6 pieces for all upper and lower terminals.
❿ Replace with the required alphanumeric symbol; each package contains 100 pieces of the same symbol.

Operational characteristics of auxiliary contacts

Type			G350-G354
IEC conventional free-air thermal current Ith		A	16
IEC rated insulation voltage Ui		V	690
Terminals	Faston		1-6.35x0.8 2-2.8x0.8
Conductor section maximum (with 1 or 2 cables)			
	flexible c/w lug	mm²	2,5
	AWG	n°	14
UL/CSA and IEC/EN 60947-5-1 designation		AC	A600
		DC	P600
Mechanical life (million)		cycles	5

Type			G495❼
Rated AC control circuit voltage	AC (50/60Hz)	V	48...480
	DC	V	48...480
Power consumption with control in:			
	AC	VA	1500
	DC	W	1100
Minimum energising:			
	drop-out	ms	40
	pick-up	ms	300
Terminals	Faston		1-6.3x0.8

Type		G370-G371
Tightening torque	Nm	1
	lbin	8.9
Tool	Type	PH2
Conductor section (with 1 or 2 cables)	mm²	4
	AWG	10

Certifications and compliance

Certifications obtained:

Type	UL	CSA	EAC	CCC
G350	●	●	●	●
G354	●	●	●	—
G355	—	●	●	—
G356 ...	—	●	●	—
G360	—	●	●	—
G361	—	●	●	—
G362	—	●	●	—
G363	—	●	●	—
G370	—	●	●	—

● Certified products.
UL - UL Recognized for USA only (File E93601) as Auxiliary Devices - Component.
Products having this type of marking are intended for use as components of complete workshop-assembled equipment.
CSA - CSA certified for Canada only (File 54332) as Auxiliary Devices for motor controllers.

Compliant with standards: IEC/EN 60947-1, IEC/EN 60947-4-1, UL508, CSA C22.2 n° 14; add-on auxiliary contacts also comply with: IEC/EN 60947-5-1.

Combinations: Mounting position on B115-B630 contactors

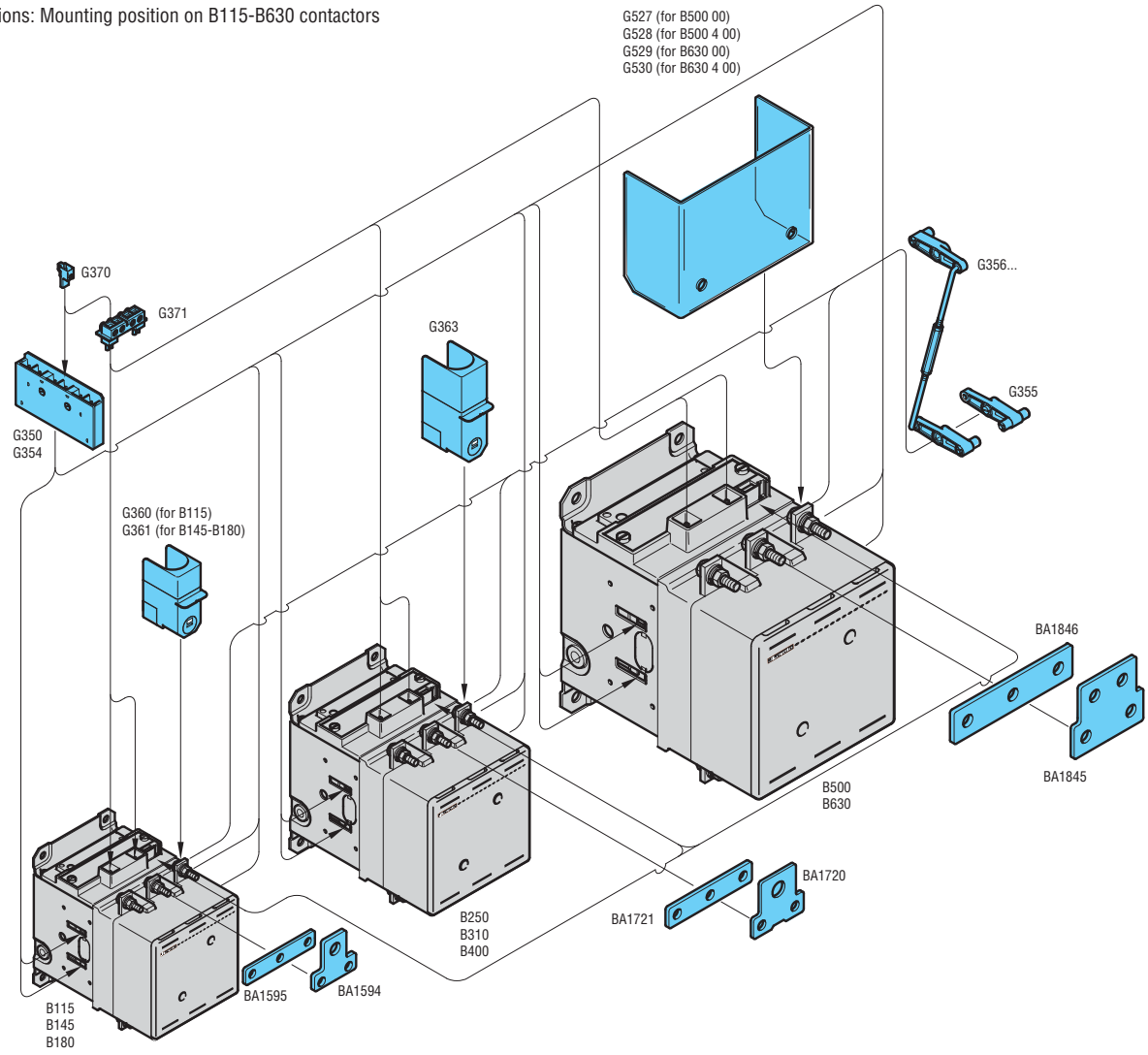

The add-on auxiliary contact blocks G350 and G354 can be applied to contactors B115-B630 1000 only up to a maximum of four pieces for each contactor, for a total of 12 contacts.
The contact block G350 provides a 2NO+1NC or 1NO+2NC combination depending on its mounting position; see the drawing below. The G354 block consists of 1NO+1NC.

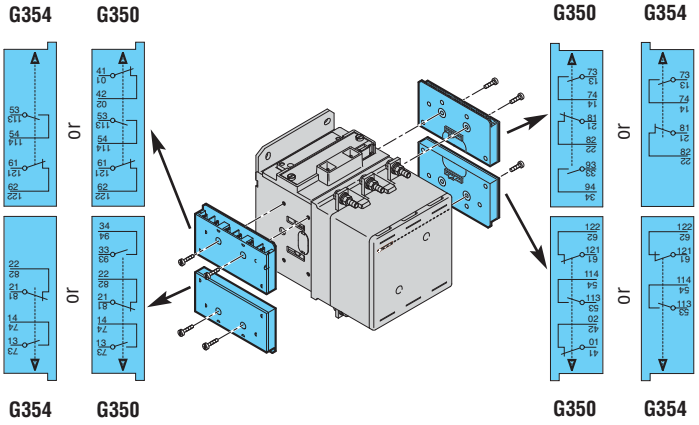

Contact blocks, BFX10 with 2 contacts, G484, G485, G486 and G487 types, can be mounted using the G358 adapter, refer to page 2-18 for exact types and order codes of the blocks.
A maximum of four adapters can be possibly used per contactor and each adapter can hold one BFX10, G484, G485, G486 and G487.

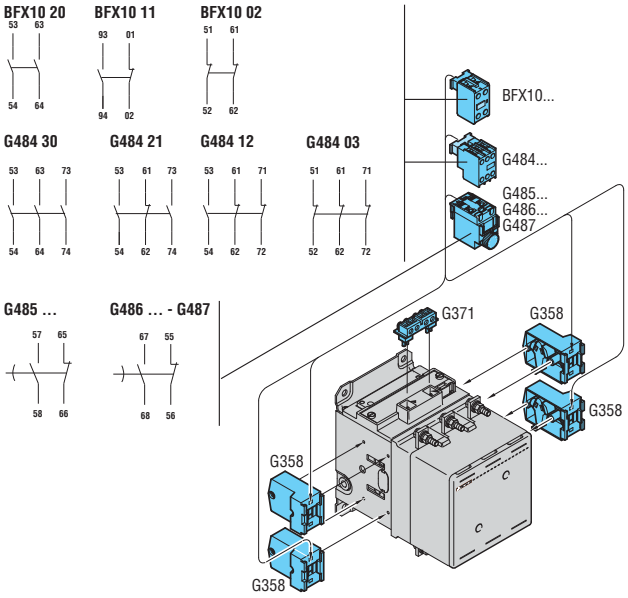

AC coils



BFX91A...



BFX92A...



BFX93A...



11 BA705...

Order code	Rated frequency and voltage		Qty per pkg	Wt
	[Hz]	[V]	n°	[kg]
For contactors BF00 A-BF09 A-BF12 A-BF18 A-BF25 A.				
BFX91 A024❶	50/60	24VAC	1	0.085
BFX91 A048❶		48VAC	1	0.085
BFX91 A110❶		110VAC	1	0.085
BFX91 A230❶		230VAC	1	0.085
BFX91 A400❶		400VAC	1	0.085
BFX91 A024 60❶	60	24VAC	1	0.085
BFX91 A048 60❶		48VAC	1	0.085
BFX91 A120 60❶		120VAC	1	0.085
BFX91 A220 60❶		220VAC	1	0.085
BFX91 A230 60❶		230VAC	1	0.085
BFX91 A460 60❶		460VAC	1	0.085
BFX91 A575 60❶		575VAC	1	0.085
For contactors BF26 A-BF32 A-BF38 A.				
BFX92A 024❶	50/60	24VAC	1	0.088
BFX92A 048❶		48VAC	1	0.088
BFX92A 110❶		110VAC	1	0.088
BFX92A 230❶		230VAC	1	0.088
BFX92A 400❶		400VAC	1	0.088
BFX92A 024 60❶	60	24VAC	1	0.088
BFX92A 048 60❶		48VAC	1	0.088
BFX92A 120 60❶		120VAC	1	0.088
BFX92A 220 60❶		220VAC	1	0.088
BFX92A 230 60❶		230VAC	1	0.088
BFX92A 460 60❶		460VAC	1	0.088
BFX92A 575 60❶		575VAC	1	0.088
For contactors BF40 A-BF50 A-BF65 A-BF80 A.				
BFX93 A024❶	50/60	24VAC	1	0.150
BFX93 A048❶		48VAC	1	0.150
BFX93 A110❶		110VAC	1	0.150
BFX93 A230❶		230VAC	1	0.150
BFX93 A400❶		400VAC	1	0.150
BFX93 A024 60❶	60	24VAC	1	0.150
BFX93 A048 60❶		48VAC	1	0.150
BFX93 A120 60❶		120VAC	1	0.150
BFX93 A220 60❶		220VAC	1	0.150
BFX93 A230 60❶		230VAC	1	0.150
BFX93 A460 60❶		460VAC	1	0.150
BFX93 A575 60❶		575VAC	1	0.150
For contactors BF95-BF110.				
11 BA705 024	50/60	24VAC	1	0.145
11 BA705 048		48VAC	1	0.145
11 BA705 110		110VAC	1	0.145
11 BA705 230		230VAC	1	0.145
11 BA705 400		400VAC	1	0.145
11 BA705 024 60	60	24VAC	1	0.145
11 BA705 048 60		48VAC	1	0.145
11 BA705 120 60		120VAC	1	0.145
11 BA705 220 60		220VAC	1	0.145
11 BA705 230 60		230VAC	1	0.145
11 BA705 460 60		460VAC	1	0.145
11 BA705 575 60		575VAC	1	0.145

new

❶ Four-terminal coil.

Operational characteristics for BFX91 A, BFX92 A and BFX93 A coils
AC control

Rated voltage at 50/60, 60Hz			V	12...600
Operating voltage limits				
50/60Hz coil powered at	50Hz	pick-up	% Us	80...110
		drop-out	% Us	20...55
	60Hz	pick-up	% Us	85...110
		drop-out	% Us	20...55
60Hz coil powered at 60Hz		pick-up	% Us	80...110
		drop-out	% Us	20...55
Average coil consumption at ≤20°C				
50/60Hz coil powered at	50Hz	in-rush	VA	75
		holding	VA	9
	60Hz	in-rush	VA	70
		holding	VA	6.5
60Hz coil powered at 60Hz		in-rush	VA	75
		holding	VA	9
Dissipation	at 50Hz		W	2.5

Operational characteristics for BA705 coil
AC control

Rated voltage at 50/60, 60Hz			V	12...600
Operating voltage limits				
50/60Hz coil powered at	50Hz	pick-up	% Us	80...110
		drop-out	% Us	20...55
	60Hz	pick-up	% Us	85...110
		drop-out	% Us	40...55
60Hz coil powered at 60Hz		pick-up	% Us	80...110
		drop-out	% Us	20...55
Average coil consumption at ≤20°C				
50/60Hz coil powered at	50Hz	in-rush	VA	220
		holding	VA	18
	60Hz	in-rush	VA	200
		holding	VA	15
60Hz coil powered at 60Hz		in-rush	VA	220
		holding	VA	18
Dissipation	at 50Hz		W	6

Materials
Class F enamelled copper wire.

Special versions
For coils with non standard voltages, consult Customer Service for information; see contact details on inside front cover.

AC/DC and DC coils

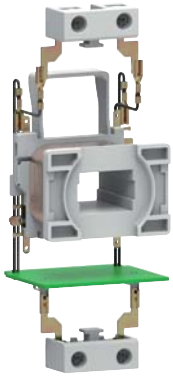

BFX93 E



11 BA911...

Order code	Rated voltage	Qty per pkg	Wt
	[V]	n°	[kg]
For contactors BF40 E-BF50 E-BF65 E-BF80 E.			
BFX93 E024	20...48V AC/DC	1	0.150
BFX93 E110	60...110V AC/DC	1	0.150
BFX93 E230	100...250V AC/DC	1	0.150
For contactors BF95 C...BF110 C.			
11 BA911 12	12VDC	1	0.380
11 BA911 24	24VDC	1	0.380
11 BA911 48	48VDC	1	0.380
11 BA911 60	60VDC	1	0.380
11 BA911 110	110VDC	1	0.380
11 BA911 125	125VDC	1	0.380
11 BA911 220	220VDC	1	0.380

NOTE: No coil replacement for contactors BF00 D, BF09 D-BF38 D, BF00 L, BF09 L-BF38 L, is possible.

Operational characteristics for BFX93 E coil
AC/DC control

Rated voltage		V	20...250
Operating voltage limits: 50/60 Hz coil powered at or in DC	pick-up	% Us	80...110❶
	drop-out	% Us	20...25❷
Average coil cons. at ≤20°C	in-rush	VA/W	60...125/50
	holding	VA/W	1.7...2.3/1.5

Operational characteristics for BA911 coil
DC control

Rated voltage		V	12...600
Operating voltage limits:	pick-up	% Us	80...110
	drop-out	% Us	10...25
Average dissipation ≤20°C in-rush/holding		W	15

❶ For electronically controlled AC/DC coils 80% of Us min. and 110% of Us max.
❷ For electronically controlled AC/DC coils 20% of Us min. and 55% of Us max.

Materials
Class F enamelled copper wire.

Special versions
For coils with non standard voltages, consult Customer Service for information; see contact details on inside front cover.

AC/DC coils



Coil



Bridge rectifier



Coil protection



Coil assembly

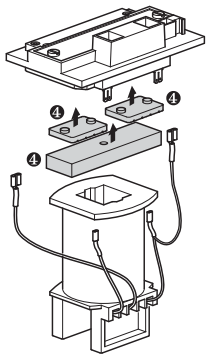

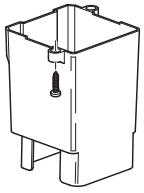

Order code	Rated voltage AC 50/60Hz and DC	Qty per pkg	Wt
	[V]	n°	[kg]
Coil for B115-B145-B180 contactors.			
11 BA11574 24	24VAC/DC	1	0.800
11 BA11574 48	48VAC/DC	1	0.800
11 BA11574 60	60VAC/DC	1	0.800
11 BA11574 110	110...125VAC/DC	1	0.800
11 BA11574 220	220...240VAC/DC	1	0.800
11 BA11574 380	380...415VAC/DC	1	0.800
11 BA11574 440	440...480VAC/DC	1	0.800
Coil for B250-B310-B400 contactors.			
11 BA1699 24	24VAC/DC	1	1.800
11 BA1699 48	48VAC/DC	1	1.800
11 BA1699 60	60VAC/DC	1	1.800
11 BA1699 110	110...125VAC/DC	1	1.800
11 BA1699 220	220...240VAC/DC	1	1.800
11 BA1699 380	380...415VAC/DC	1	1.800
11 BA1699 440	440...480VAC/DC	1	1.800
Coil for B500-B630-B630 1000 contactors.			
11 BA1800 48	48VAC/DC	1	3.400
11 BA1800 60	60VAC/DC	1	3.400
11 BA1800 110	110...125VAC/DC	1	3.400
11 BA1800 220	220...240VAC/DC	1	3.400
11 BA1800 380	380...415VAC/DC	1	3.400
11 BA1800 440	440...480VAC/DC	1	3.400
Coil for B1250-B1600 contactors.			
11 BA1800 110❶	110...125VAC❶	1	3.400
11 BA1800 220❶	220...240VAC❶	1	3.400

Order code	For contactor	Qty per pkg	Wt
		n°	[kg]
Bridge rectifier (Faston terminals).			
11 BA1575 1	B115-B145-B180	1	0.170
11 BA1700 1	B250-B310-B400	1	0.230
11 BA1799	B500-B630-B630 1000 B1250-B1600	1	0.520
Coil protection.			
11 BA1553	B115-B145-B180	1	0.042
11 BA1678	B250-B310-B400	1	0.079
11 BA1803	B500-B630-B630 1000 B1250-B1600	1	0.164
Coil assembly (Coil, rectifier and coil protection).			
11 BA1546❷	B115-B145-B180	1	1.220
11 BA1671❷	B250-B310-B400	1	2.290
11 BA1796❸	B500-B630-B630 1000 B1250-B1600	1	4.650

❶ Available for AC supply only.
❷ Add the coil voltage digit. Standard voltages are:
- AC/DC 24 - 48 - 60 - 110...125 (indicate 110) - 220...240 (indicate 220) - 380...415 (indicate 380) - 440...480V (indicate 440).

Example: 11 BA1546 110 for B115-B180 contactor coil assembly suitable for 110-125VAC/DC supply.

❸ Add the coil voltage digit. Standard voltages are:
- AC/DC 48 - 60 - 110...125 - 220...240 - 380...415 - 440...480V.

Example: 11 BA1796 110 for B500-B1600 contactor coil assembly suitable for 110-125VAC/DC supply.

For B1250 and B1600 only 110...125 and 220...240VAC voltages are available.
❹ When replacing the coil, retrieve the dampers (1 pair for B115...B180 and 2 pairs for B250...B1600) and the fixed core and refit them with the new coil.

Operational characteristics
AC and DC control

For contactor type			B115 - B145 - B180
Supply voltage			AC and DC
Rated control voltage		V	24...480
Operating limits	pick-up	% Us	80...110
	drop-out	% Us	20...60
Consumption	in-rush	VA/W	300
	holding	VA/W	10
Dissipation		W	10

For contactor type			B250 - B310 - B400
Supply voltage			AC and DC
Rated control voltage		V	24...480
Operating limits	pick-up	% Us	80...110
	drop-out	% Us	20...60
Consumption	in-rush	VA/W	300
	holding	VA/W	10
Dissipation		W	10

For contactor type			B500 - B630 - B630 1000
Supply voltage			AC and DC
Rated control voltage		V	48...480
Operating limits	pick-up	% Us	80...110
	drop-out	% Us	20...60
Consumption	in-rush	VA/W	400
	holding	VA/W	18
Dissipation		W	18

For contactor type			B1250 - B1600
Supply voltage			AC
Rated control voltage		V	110/240
Operating limits	pick-up	% Us	80...110
	drop-out	% Us	20...60
Consumption	in-rush	VA/W	800
	holding	VA/W	45
Dissipation		W	40

Materials
Class F enamelled copper wire.

Coil assembly
Comprises the coil, bridge rectifier, fixed core, coil protection, cross piece and fixing screws.

Special versions
For coils with non standard voltages, consult Customer Service for information; see contact details on inside front cover.

Main contacts for BF contactors



BFX99...



11 G274... - 11 G275... - 11 G276... 11 G475 - 11 G476

Order code	For contactor	Qty per pkg	Wt
		n°	[kg]
Main contacts. 3 or 4 pole set complete with screws.			
BFX99 026T	BF26	1	0.038
BFX99 026F	BF26 T4	1	0.051
BFX99 032T	BF32	1	0.070
BFX99 038T	BF38	1	0.070
BFX99 038F	BF38 T4	1	0.093
BFX99 040T	BF40	1	0.095
BFX99 040F	BF40T4	1	0.095
BFX99 050T	BF50	1	0.095
BFX99 050F	BF50 T4	1	0.095
BFX99 065T	BF65	1	0.095
BFX99 065F	BF65 T4	1	0.127
BFX99 080T	BF80	1	0.100
BFX99 080F	BF82 T4	1	0.130
11 G475	BF95	1	0.111
11 G476	BF110	1	0.111

Main contacts and arc chutes for B contactors



11 G380... - 11 G381... - 11 G382... 11 G383... - 11 G384... - 11 G385... 11 G525... - 11 G526... - 11 G537...



Arc chute

Order code	For contactor	Qty per pkg	Wt
		n°	[kg]
Main contacts. 3 or 4 pole set complete with Allen screws and key for contact replacement.			
11 G380	B115	1	0.440
11 G380 4	B115 4	1	0.580
11 G381	B145	1	0.440
11 G381 4	B145 4	1	0.580
11 G382	B180	1	0.440
11 G382 4	B180 4	1	0.580
11 G383	B250	1	0.770
11 G383 4	B250 4	1	1.030
11 G385	B310	1	0.770
11 G385 4	B310 4	1	1.030
11 G384	B400	1	0.770
11 G384 4	B400 4	1	1.030
11 G525	B500	1	2.520
11 G525 4	B500 4	1	3.360
11 G526	B630	1	2.660
11 G526 4	B630 4	1	3.550
11 G537	B630 1000	1	2.660
11 G537 4	B630 1000 4	1	3.550
11 G538	B1250 24	1	5.040
11 G538 4	B1250 4 24	1	6.720
11 G539	B1600 24	1	5.320
11 G539 4	B1600 4 24	1	7.100
Arc chutes.			
11 BA1588	B115-B145-B180	1	0.755
11 BA1589	B115 4-B145 4-B180 4	1	1.000
11 BA1713	B250-B310-B400	1	1.210
11 BA1714	B250 4-B310 4-B400 4	1	1.600
11 BA1838	B500-B630-B630 1000	1	1.910
11 BA1839	B500 4-B630 4-B630 1000 4	1	2.490

Special versions
For non standard spare contact configurations, contact Customer Service; see contact details on inside front cover.

NOTE: For B1250 and B1600 contactor spares, consult Customer Service for information; see contact details on inside front cover.

2

BG... MINI-CONTACTORS WITH AC OR DC SUPPLY VOLTAGE

BG...

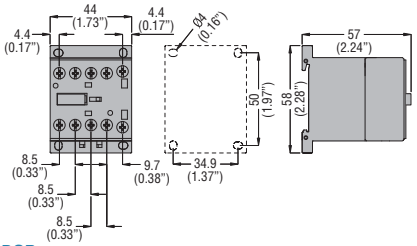

BG... with screw terminals and **RF...9** thermal overload relay

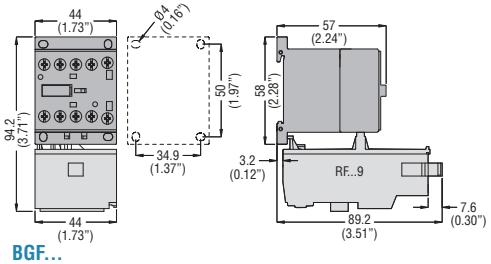

BGP...
with rear PCB solder pins

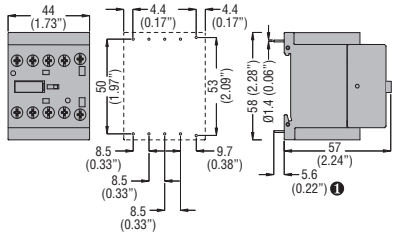

❶ Recommended PCB drillings 1.7-2mm.

BGF...
with Faston terminals

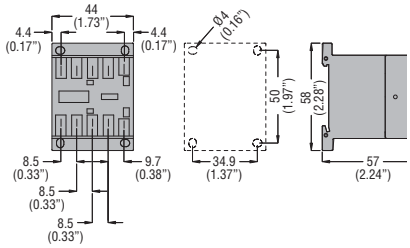

BF... CONTACTORS WITH AC SUPPLY VOLTAGE

BF00 A... BF09 A... - BF12 A... - BF18 A... - BF25 A... three poles with **RF...38** thermal overload relay

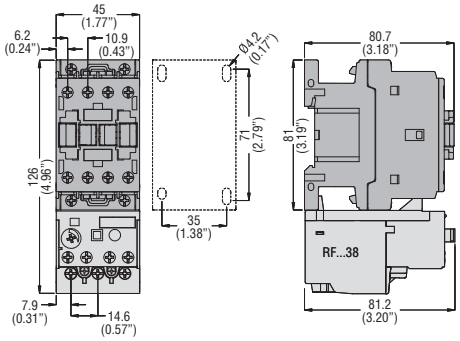

BF09T... A... - BF12T... A... - BF18T... A... four poles

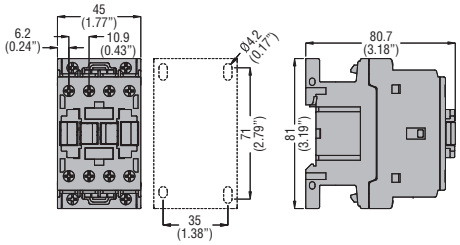

BF26 00A... - BF32 00A... - BF38 00A... three poles with **RF...38** thermal overload relay

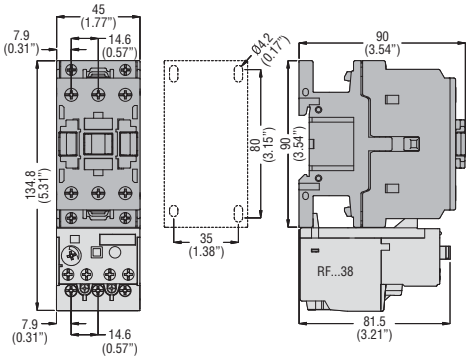

BF26 T...A... - BF38 T...A... four poles

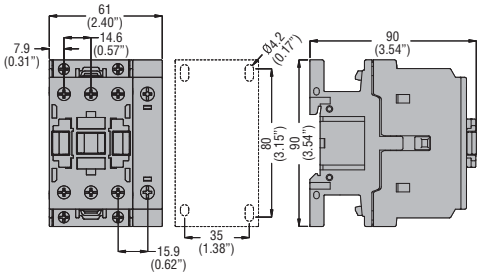

BF40 00A... - BF50 00A... - BF65 00A... - BF80 00A...
three poles with **RF82** thermal overload relay

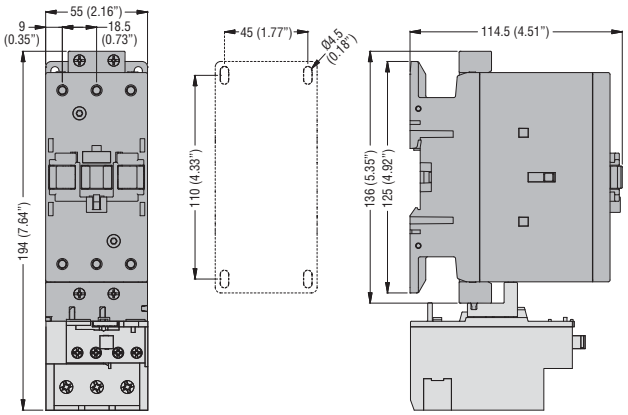

BF40 T...A... - BF50 T...A... - BF65 T...A... - BF80 T...A... - BFD80 T4... four poles

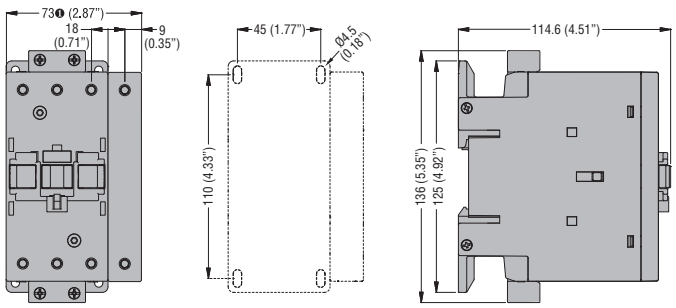

❶ BF80T2 82mm/3.23"

BF95 00... - BF110 00... three poles with **RF...95 3** thermal relay

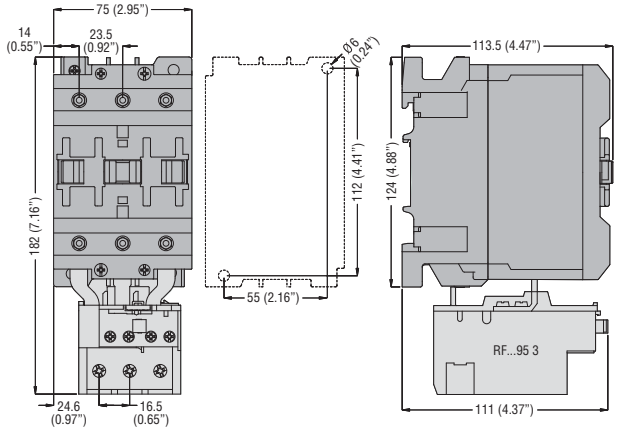

BF...CONTACTORS WITH DC SUPPLY VOLTAGE

BF09... - BF12... - BF18... - BF25...D and **L**
three poles with **RF...38** thermal overload relay

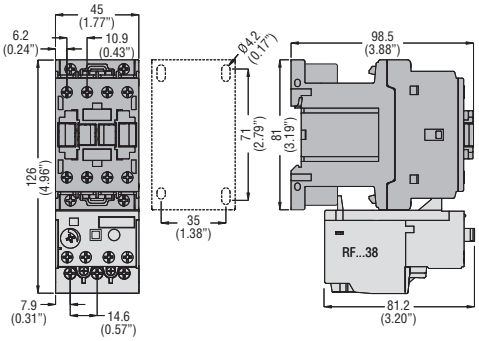

Control relays

BF00...D and **BF00...L**
BF09 T... - BF18 T... D and **L** four poles

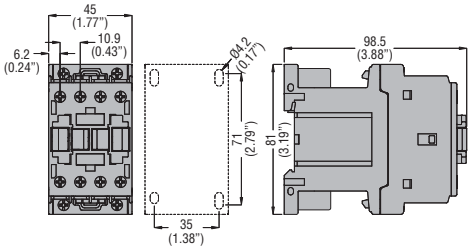

BF26... - BF32... - BF38... D and **L** three poles with **RF...38** thermal overload relay

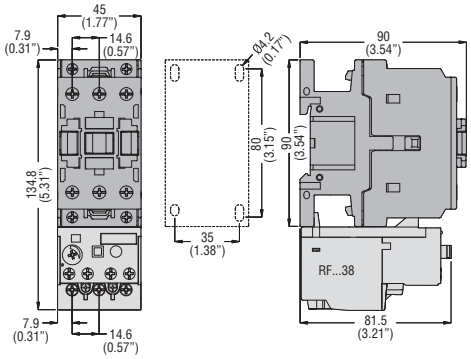

BF26 T... - BF38 T... D and **L** four poles

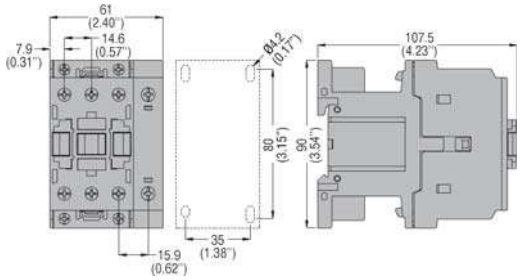

BF40 00E... - BF50 00E... - BF65 00E... - BF80 00E...
three poles with **RF82** thermal overload relay

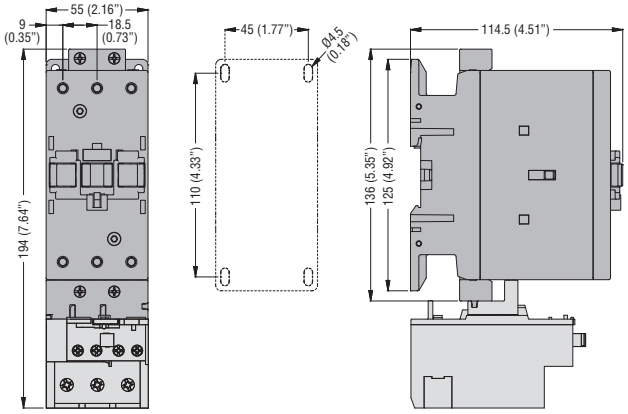

BF65 T4 E... - BF80 T4 E... four poles

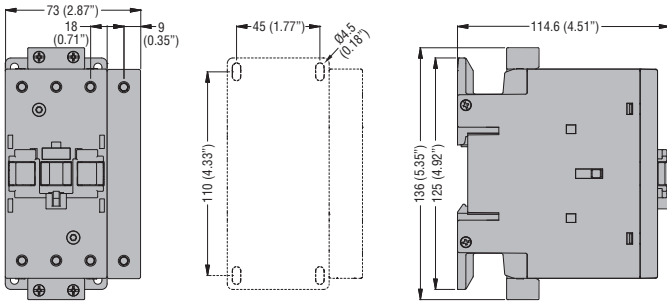

BF95C 00... - BF110C 00... three poles with **RF...95 3** thermal overload relay

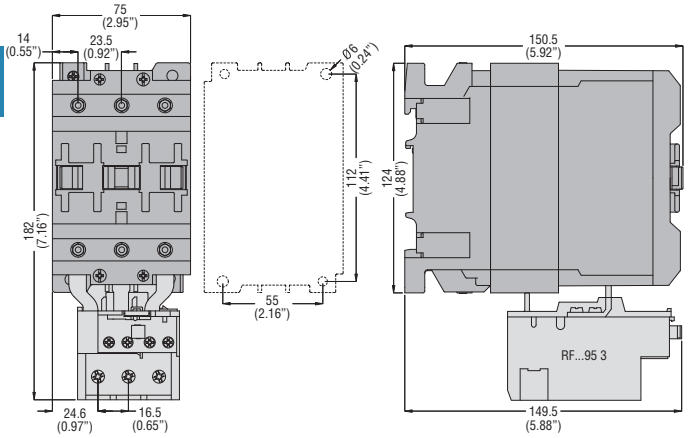

B... CONTACTORS WITH AC OR DC SUPPLY VOLTAGE

B115 - B145 - B180 three poles with **RF...200** thermal overload relay

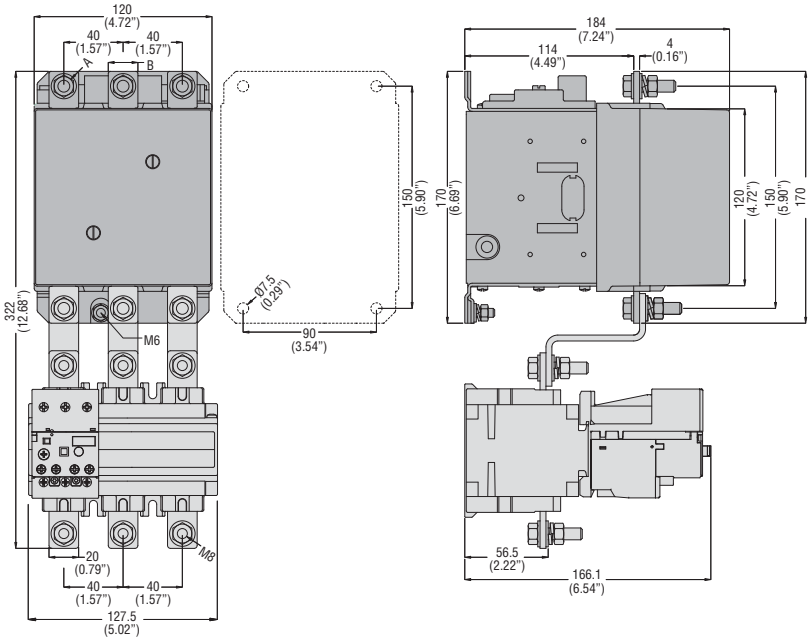

CONTACTOR TYPE	A	B
B115	M6	15 (0.59")
B145	M8	20 (0.79")
B180	M8	20 (0.79")

B115 4 - B145 4 - B180 4 four poles

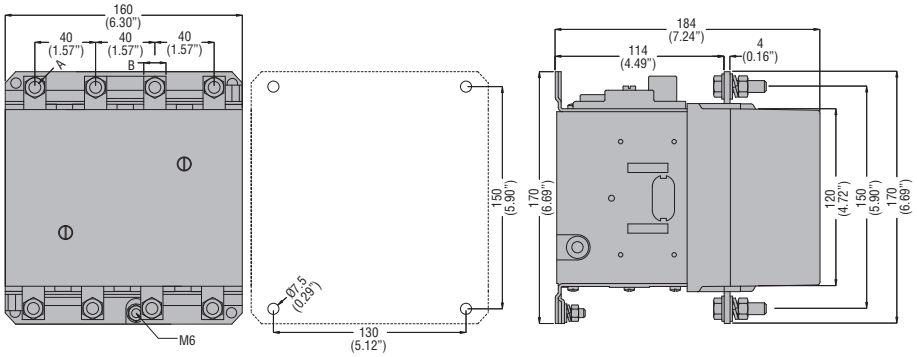

CONTACTOR TYPE	A	B
B115	M6	15 (0.59")
B145	M8	20 (0.79")
B180	M8	20 (0.79")

B250 - B310 - B400 three poles with **RF...420** thermal overload relay

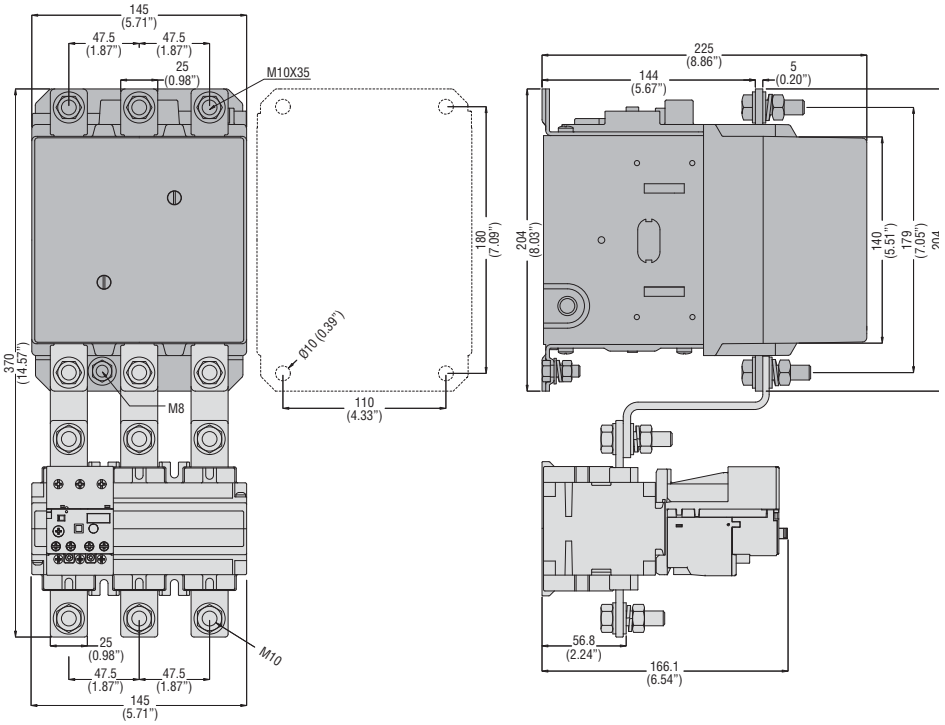

B250 4 - B310 4 - B400 4 four poles

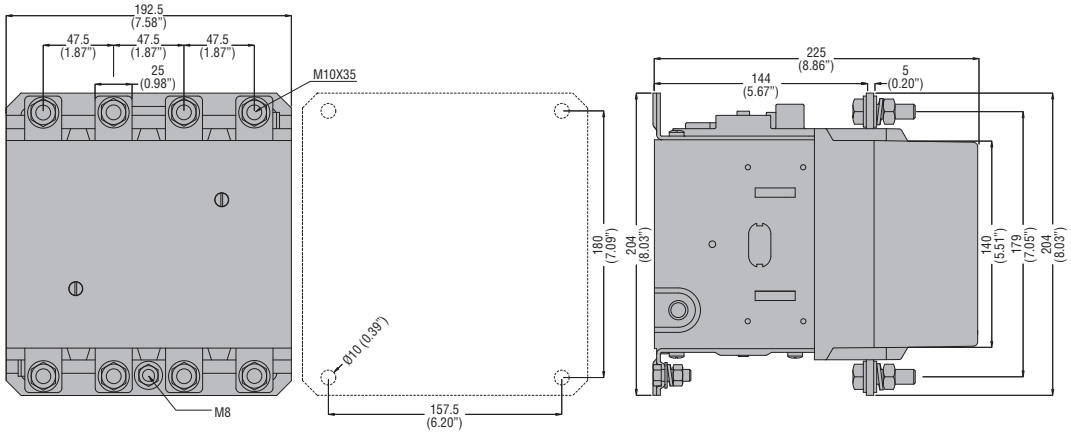

2

B500 - B630 three poles

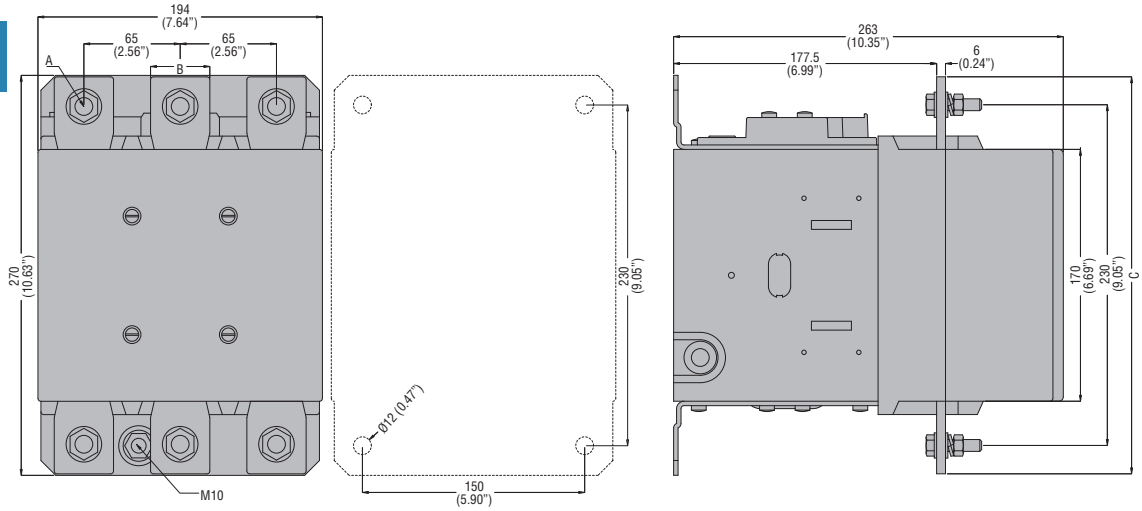

CONTACTOR TYPE	A	B	C
B500	M10	35 (1.38")	265 (10.43")
B630	M12	40 (1.57")	270 (10.63")

B500 4 - B630 4 four poles

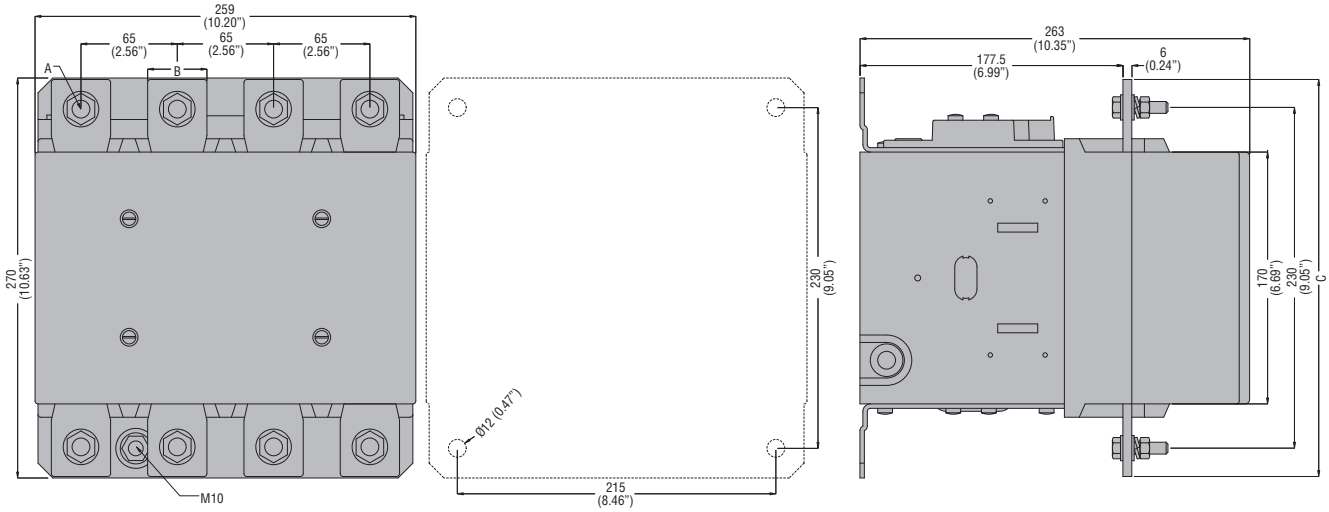

CONTACTOR TYPE	A	B	C
B500	M10	35 (1.38")	265 (10.43")
B630	M12	40 (1.57")	270 (10.63")

B630 1000 three poles

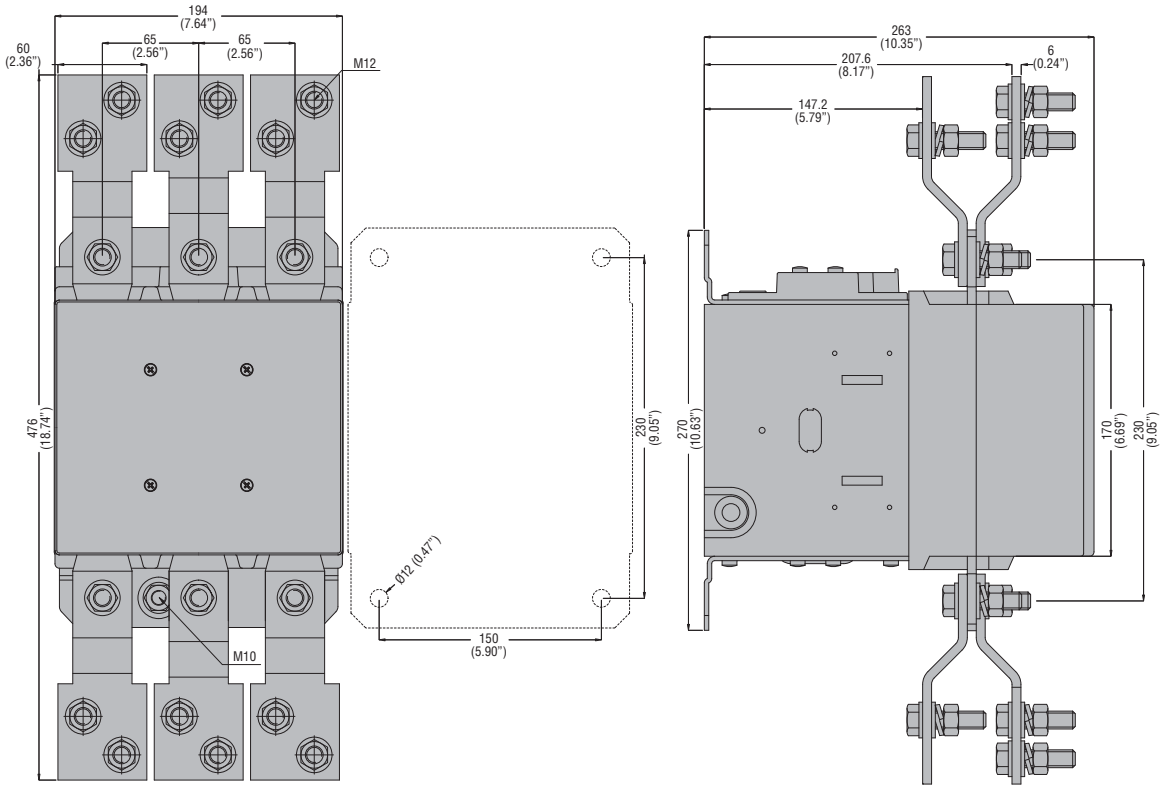

B630 1000 4 four poles

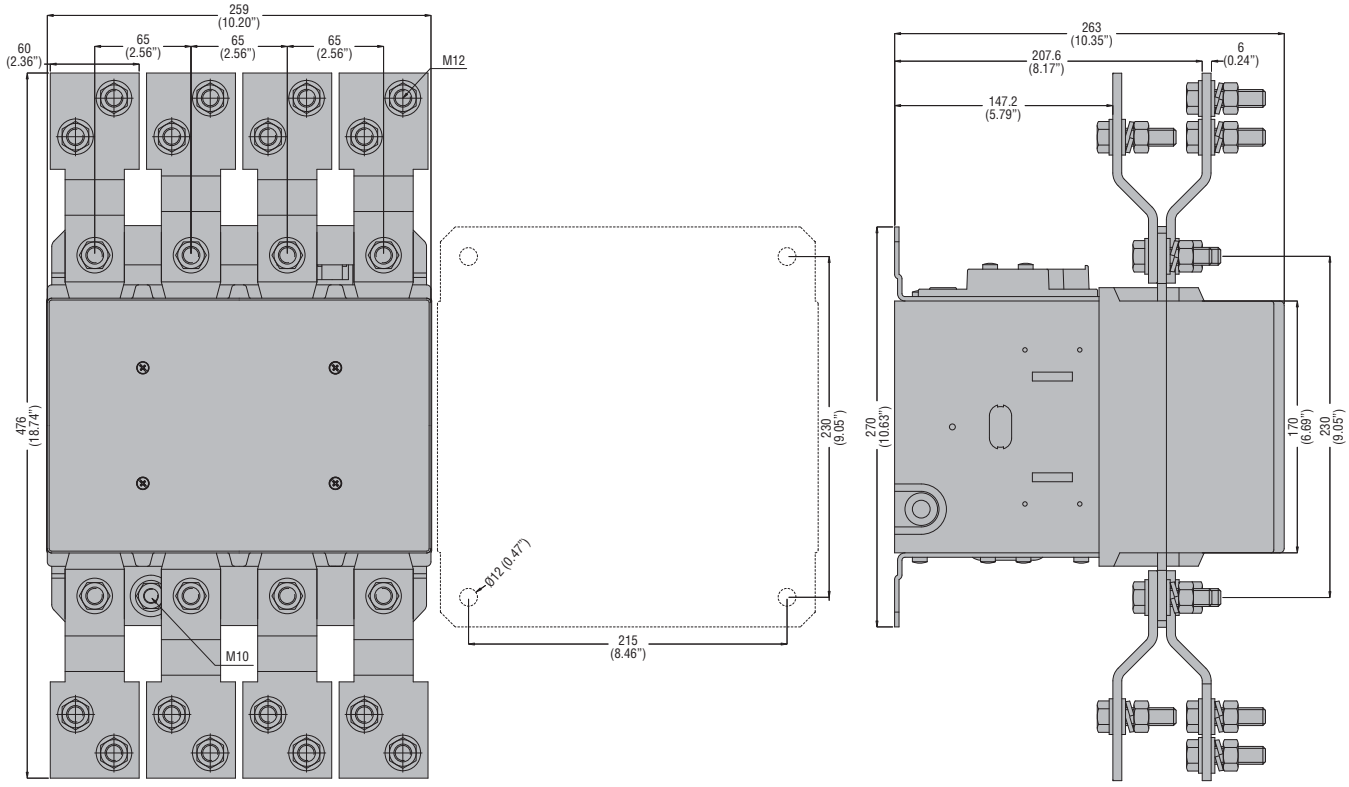

2

B1250 - B1600 three poles

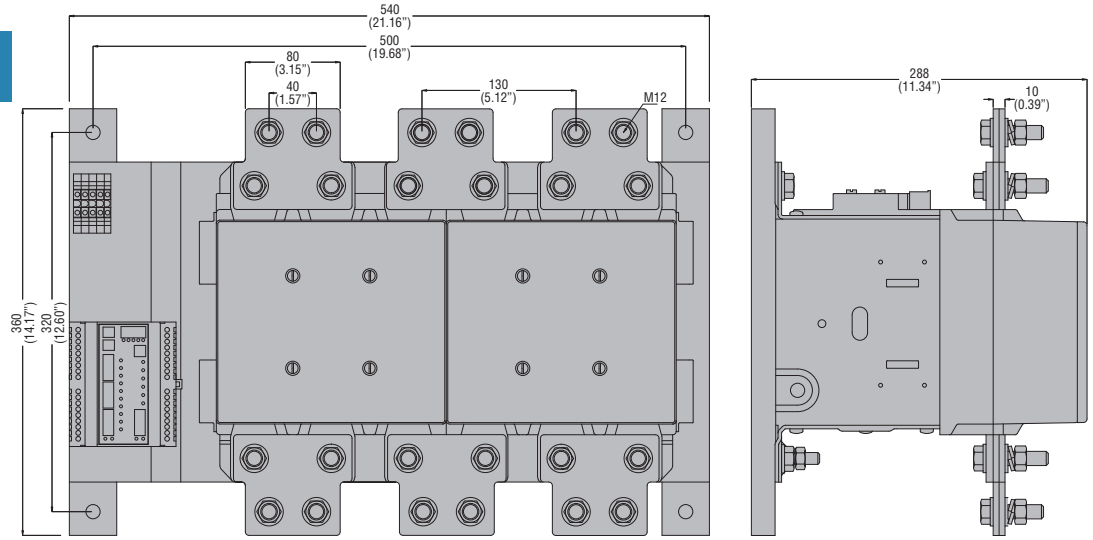

B1250 4 - B1600 four poles

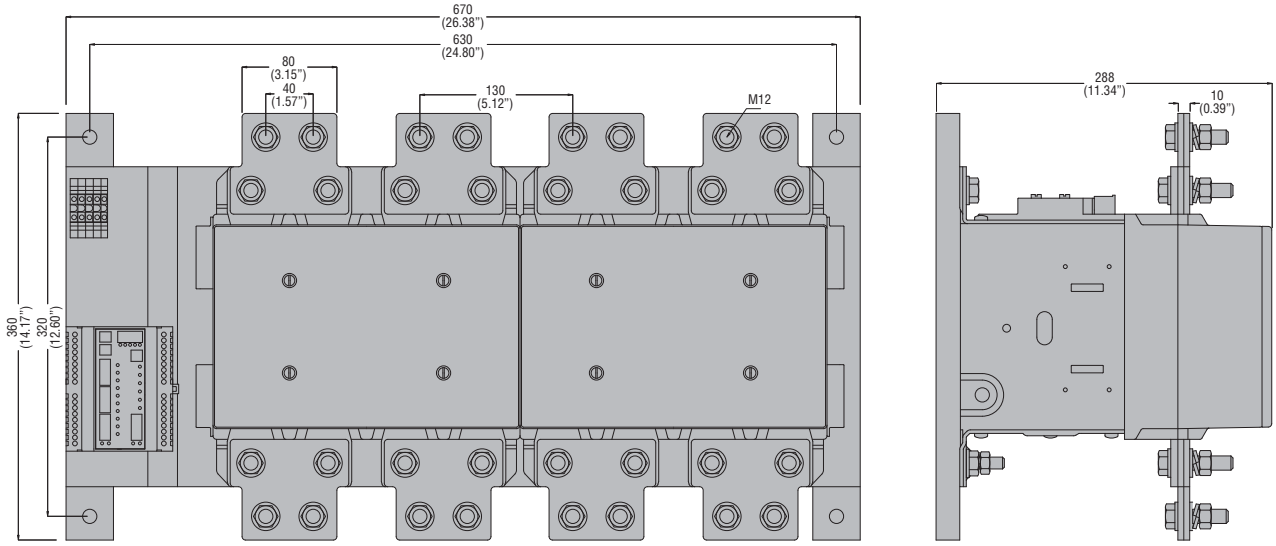

B115 - B145 - B180 - B250 - B310 - B400 - B500 - B630 - B630 1000 - B1250 - B1600

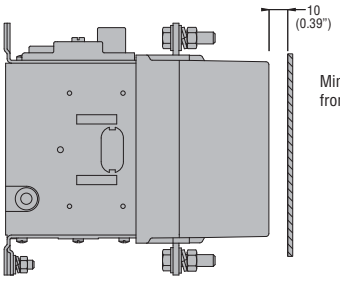

Minimum safety distance from metal parts.

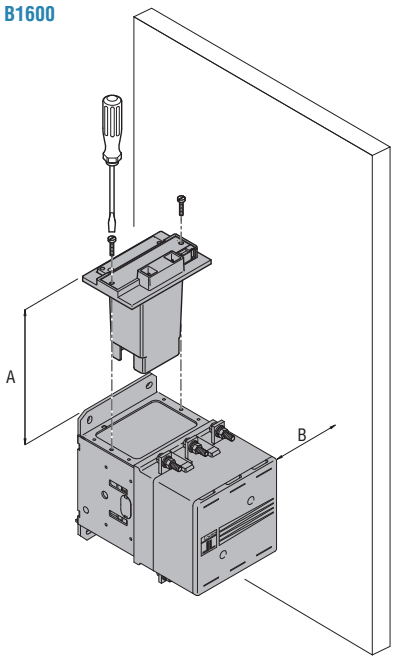

Minimum space needed to replace the coil.

	B115-B145-B180	B250-B310-B400	B500=B630 1000
A	120 (4.72")	145 (5.71")	170 (6.69")
B	100 (3.94")	110 (4.33")	160 (6.30")

If dimension B is respected, coil replacement is possible without removing power wiring.

CONTACTORS FOR POWER FACTOR CORRECTION

BFK09 10A - BFK12 10A - BFK18 10A

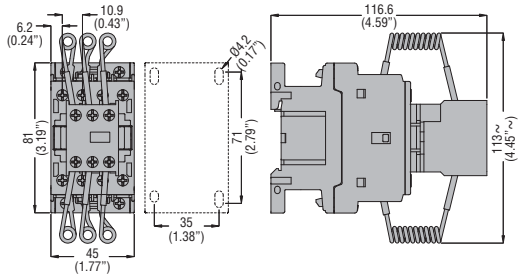

BFK26 00A - BFK32 00A - BFK38 00A

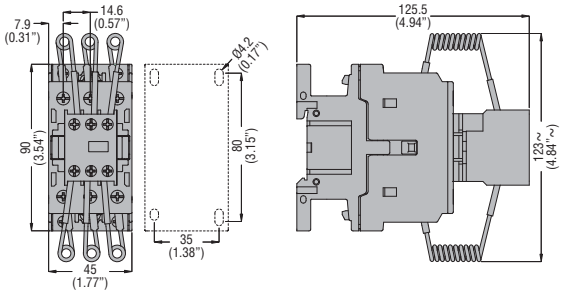

BFK50 - BFK65 - BFK80

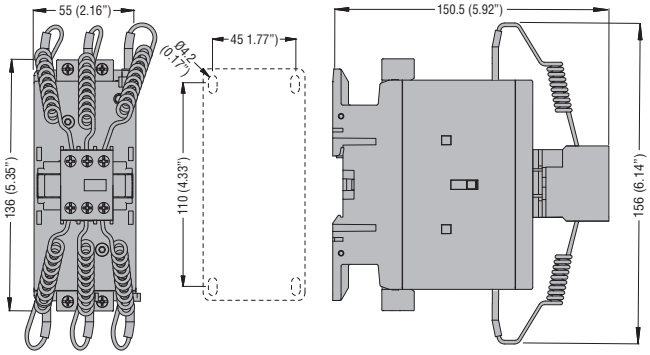

11 BF80K 00 - 11 BF110K 00

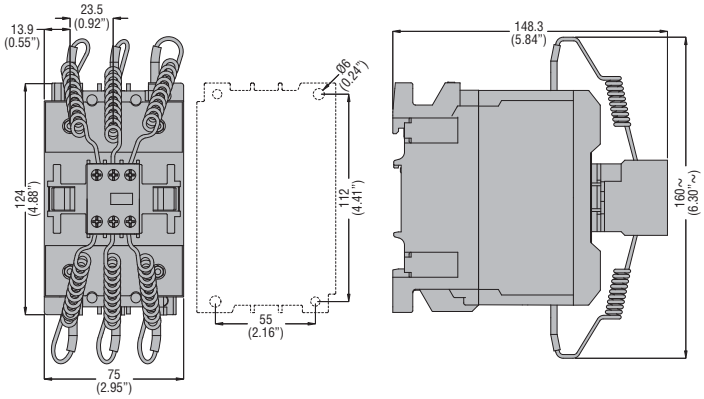

ADD-ON BLOCKS WITH BG MINI-CONTACTORS

BGX10... - BGXF10...
auxiliary contacts ❶

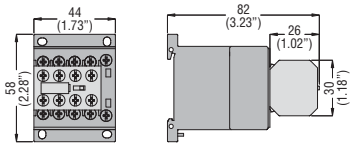

❶ Valid for BGX11... contacts as well when mounted on left-hand contactor of BGT or BGC assembly (p. 4-4 and 5).

BGX50 00 interlock with BGX10..., BGXF10... contacts and BGX77... or BGX78... or BGX79... suppressor

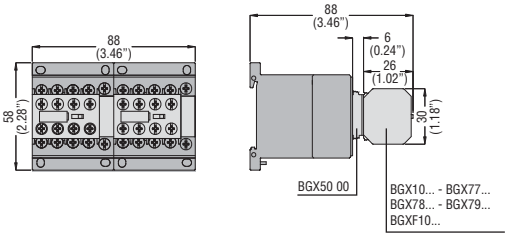

BGX77..., BGX78... or BGX79...
suppressor only

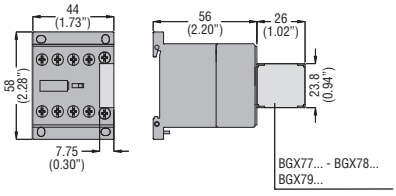

BGX80 00 shroud

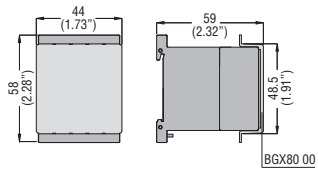

Paralleling links
G323, G324

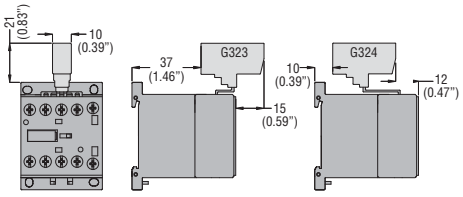

G325, G326

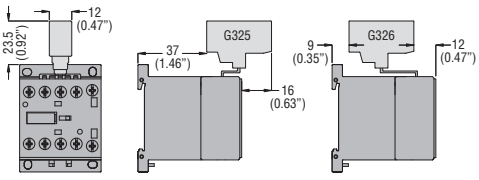

2

ADD-ON BLOCKS WITH BF CONTACTORS

Auxiliary contacts **BFX10...**
w/2 contacts

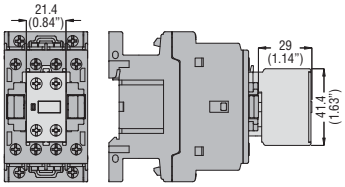

BFX10... w/4 contacts

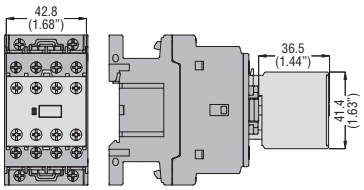

BFX12...

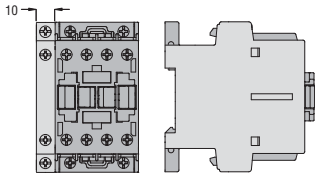

G484...

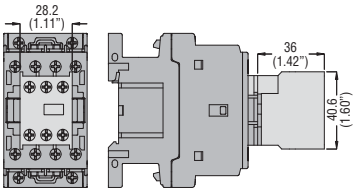

G418...

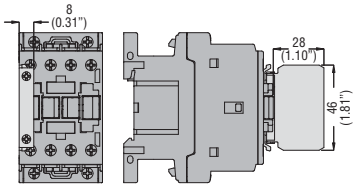

G218

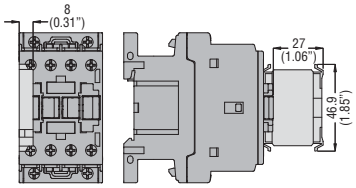

G481..., G482

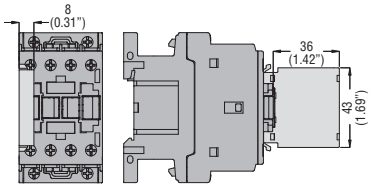

G280 with G218

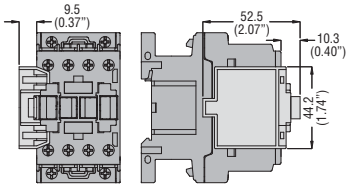

G419, with G418..., **G428..., G483** with G481... or G482

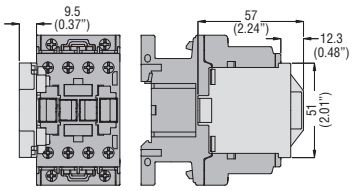

G485..., G486..., G487 delayed contacts

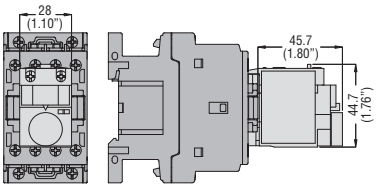

Fourth pole
BFX42

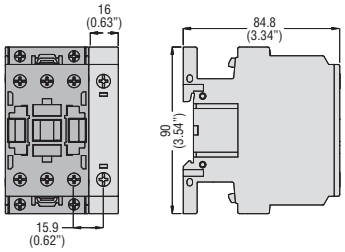

BFXD42

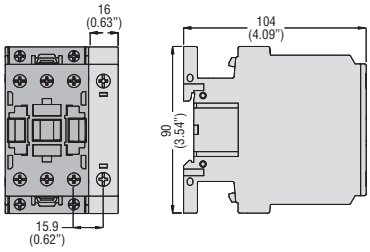

BFX43

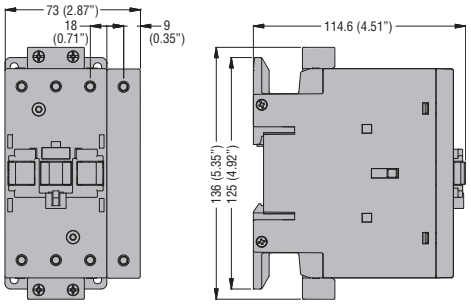

Interlocks
BFX50 00, BFX50 01..., BFX53 00, BFX53 01

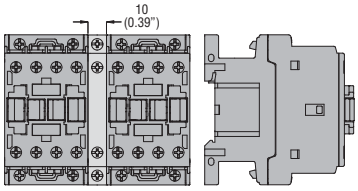

BFX50 02

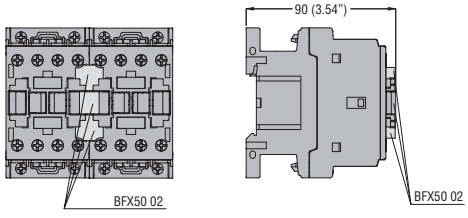

BFX50 03

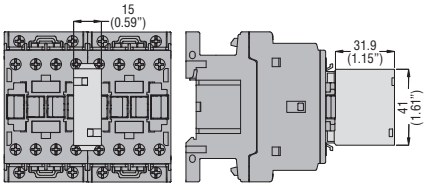

Interlock
G269 2

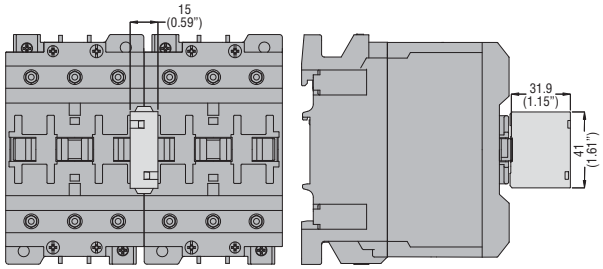

Surge suppressors
G318, G319 225, G322

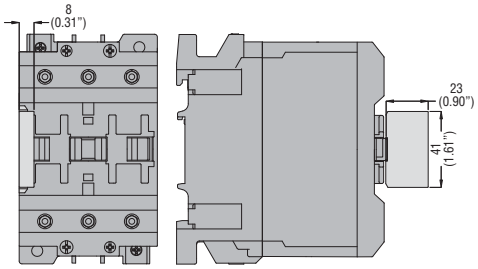

G222, G272 latch

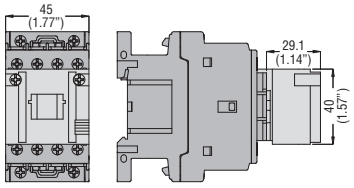

G454, G455 manual closing

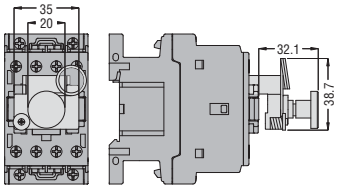

BFX80 sealing cover

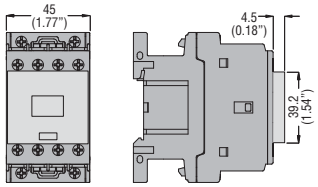

Rigid connecting kit
BFX31 01

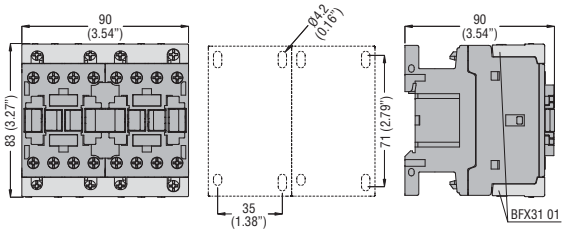

Rigid connecting kit
BFX32 01

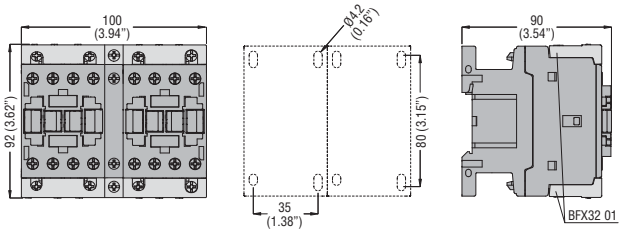

G231 terminal
1-pole

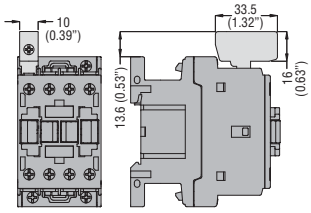

G232 - 1 pole

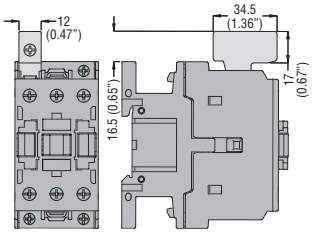

G271, G288 - 3 and 4-poles

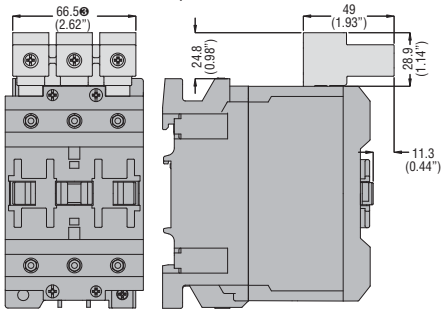

❸ 90mm for G288 add-on block

G285 auxiliary terminal

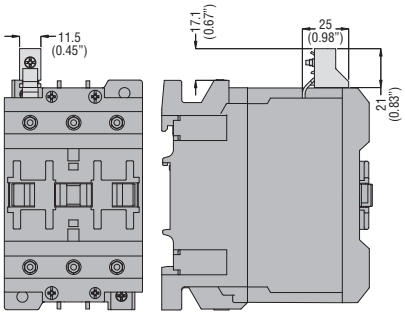

BFX89 01 fixing base

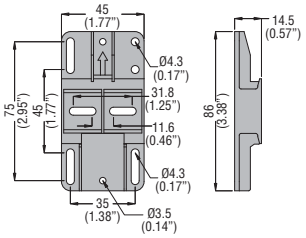

BFX89 02

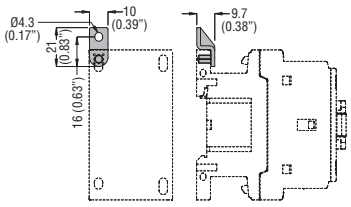

2

ADD-ON BLOCKS WITH B CONTACTORS

Auxiliary contacts **G350, G354**

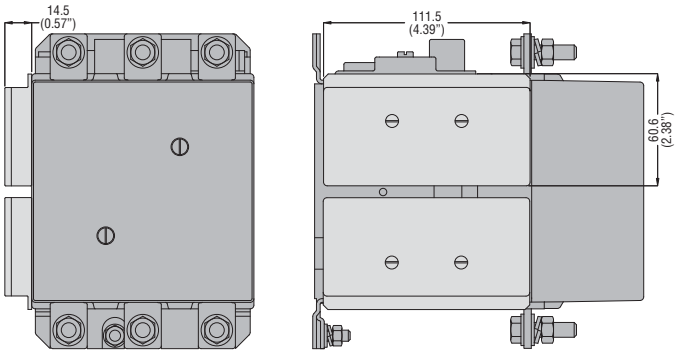

G358 adapter

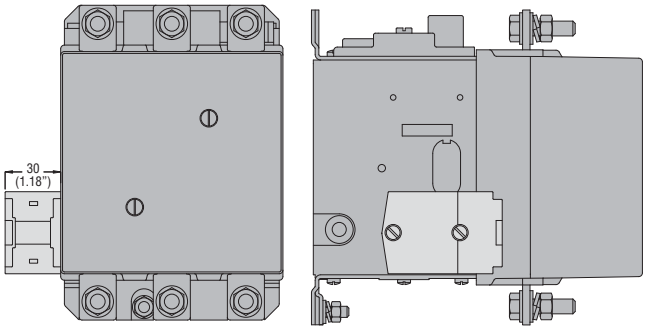

G355 interlocks

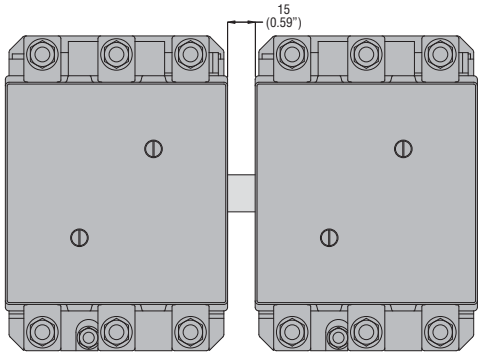

G356...

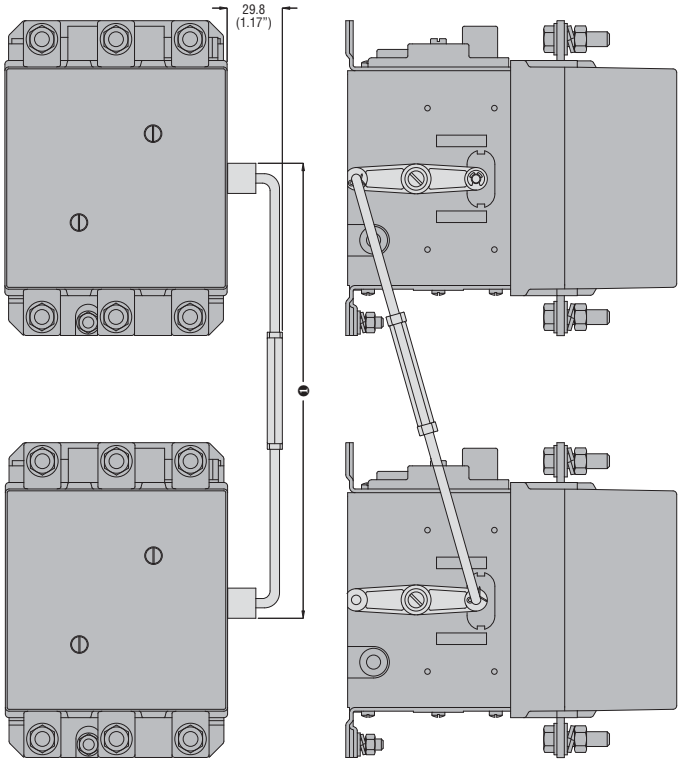

❶ For dimensions, refer to page 2-68.

Terminal protection **G360, G361**

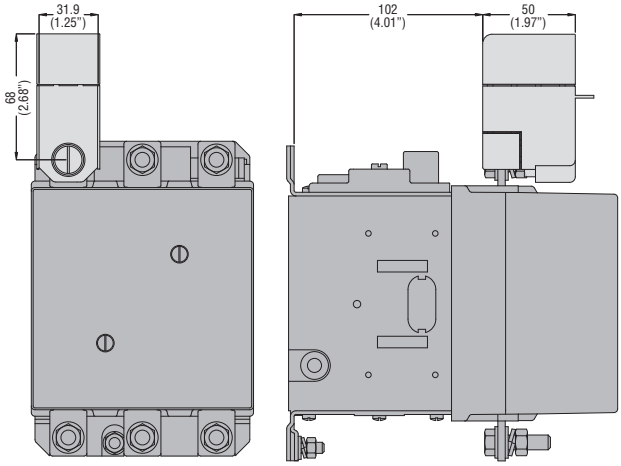

Terminal protection **G363**

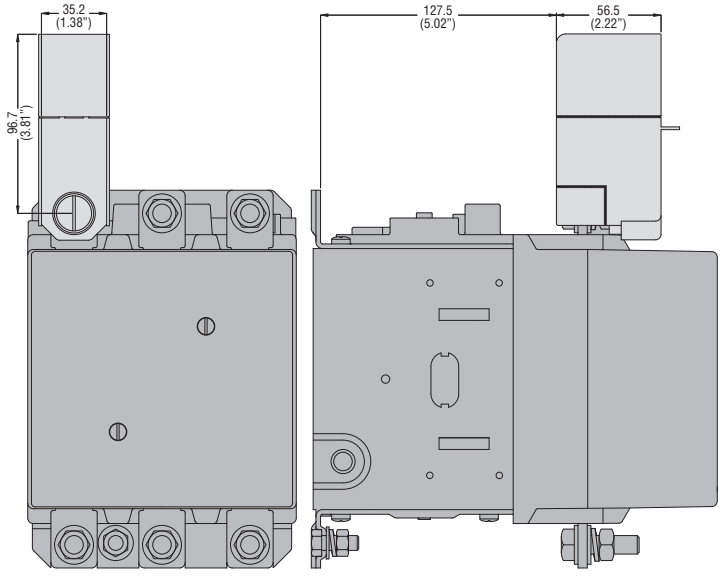

G527, G529

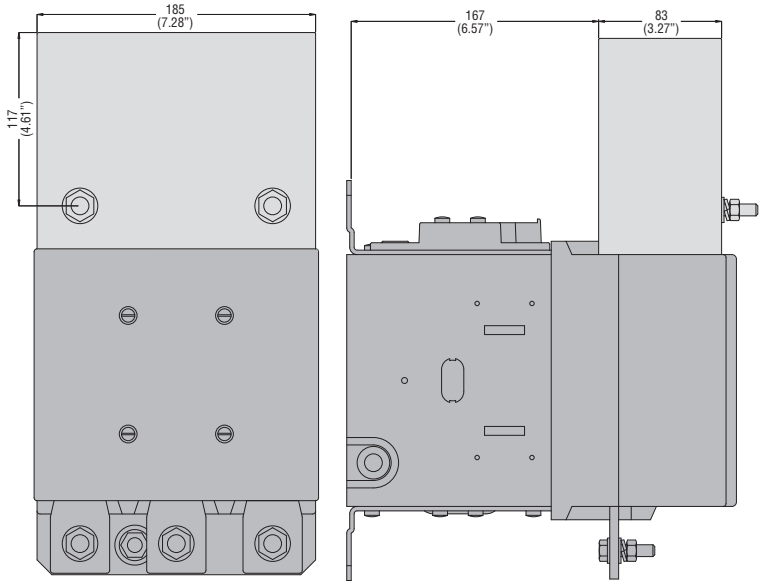

G528, G530

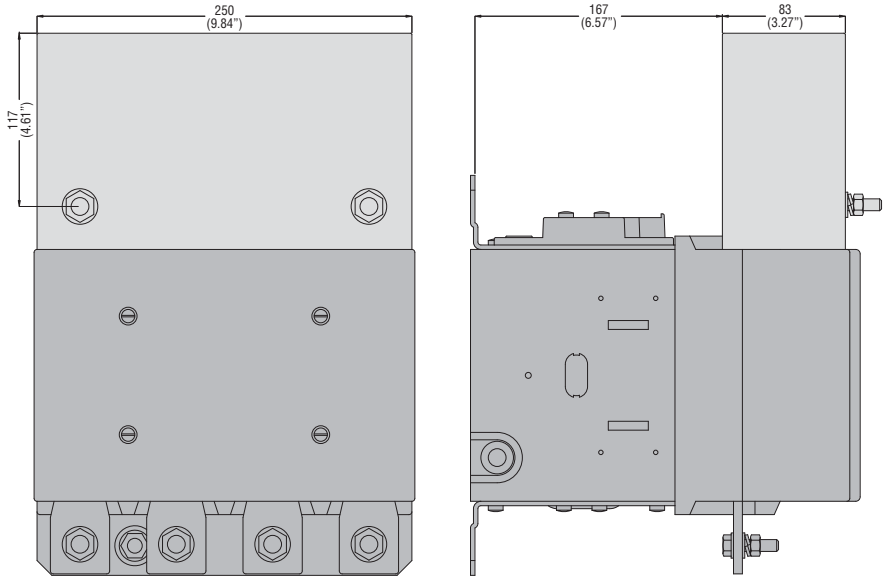

BA1594, BA1720 parallel 2-pole bar

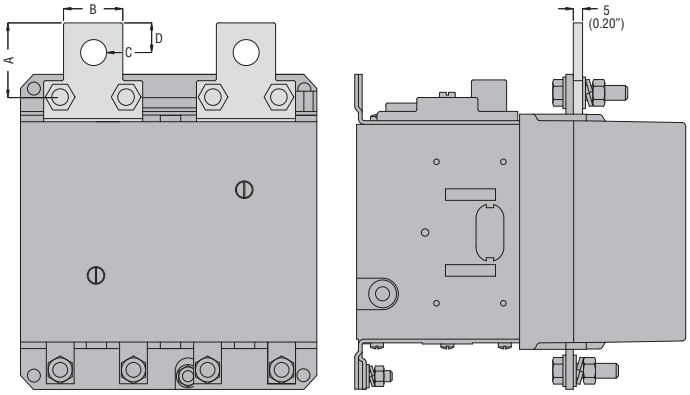

PARALLEL POLE BAR	A	B	C	D
BA1594	45 (1.77")	32 (1.26")	Ø14 (0.55")	16 (0.63")
BA1720	53 (2.09")	50 (1.97")	Ø18 (0.71")	20 (0.79")

G495 mechanical latch

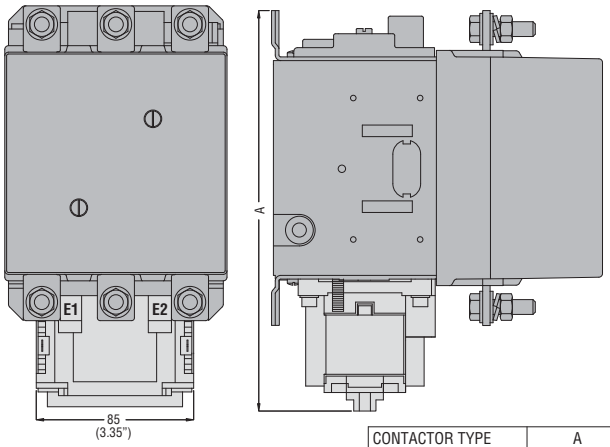

CONTACTOR TYPE	A
B115 - B145 - B180	221 (8.70")
B250 - B400	255 (8.86")
B500 - B630	300 (11.81")

BA1845

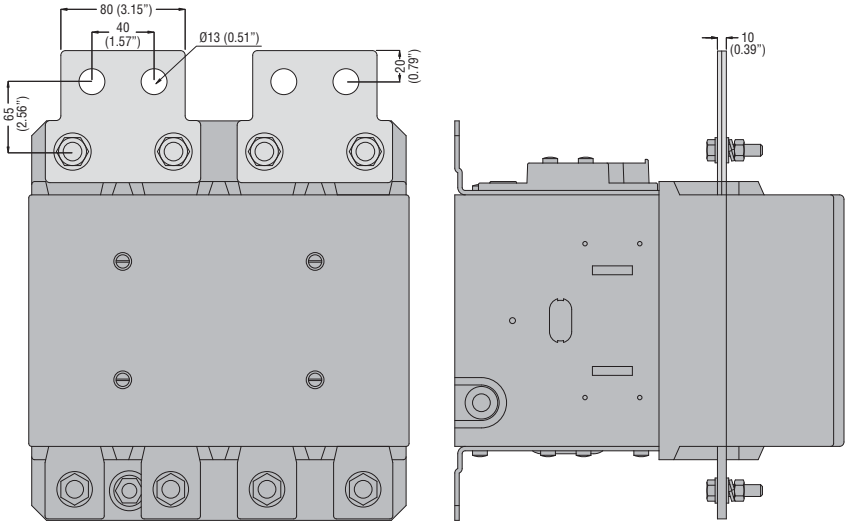

2

THREE-POLE CONTACTORS IN AC

BG06 A - BG09 A - BGF09 A - BGP09 A - BG12 A
BF09 A - BF12 A - BF18 A - BF25 A

...10

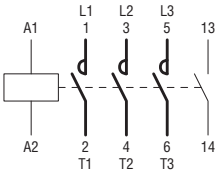

...01

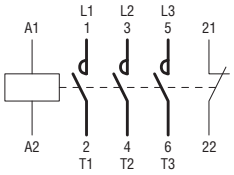

BF26 A - BF32 A - BF38 A
BF40 A - BF50 A - BF65 A
BF80 A - BF95 - BF110
BF115...B630

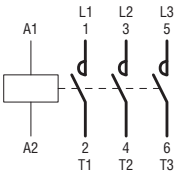

B1250 24 - B1600 24... ❶

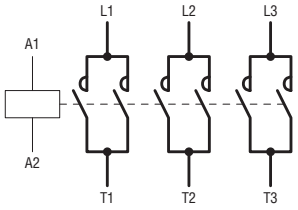

❶ The input electronic circuit of the contactor coil is designed and tested according to IEEEC 62.41 standards and can withstand a 10kV impulse voltage (1.2/50µs) with 50 Joule energy.
The use of an auxiliary reduced voltage transformer is recommended for higher values.

THREE-POLE CONTACTORS IN DC (AC/DC for BF40E...BF80E)

BG06 D - BG09 D - BGF09 D - BGP09 D - BG12 D
BG06 L - BG09 L - BGF09 L - BGP09 L - BG12 L

...10

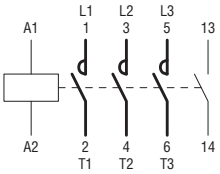

...01

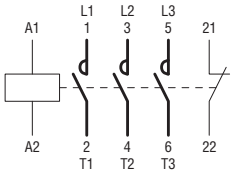

BF09 D - BF12 D - BF18 D - BF25 D
BF09 L - BF12 L - BF18 L - BF25 L

...10

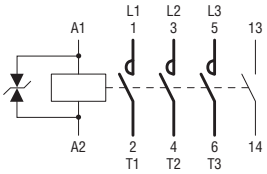

...01

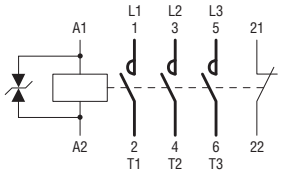

BF26 D - BF32 D - BF38 D
BF26 L - BF32 L - BF38 L

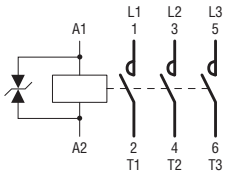

BF40 E - BF50 E - BF65 E
BF80 E

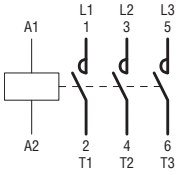

BF95C - BF110C

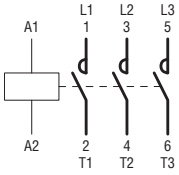

CONTACTORS FOR POWER FACTOR CORRECTION

BFK09 A - BFK12 A - BFK18 A
BFK26 A - BFK32 A - BFK38 A - BFK50 - BFK65 - BFK80 - 11 BF80K - 11 BF110K

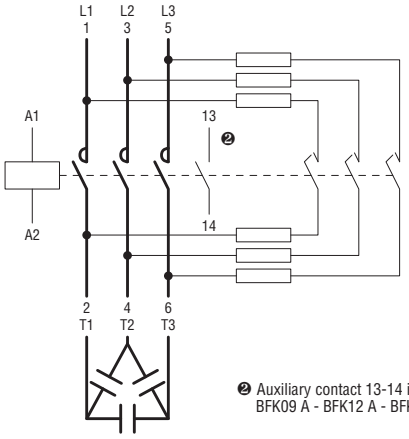

❷ Auxiliary contact 13-14 is found on BFK09 A - BFK12 A - BFK18 A types only.

FOUR-POLE CONTACTORS IN AC

BG09 T4 A - BGF09 T4 A - BGP09 T4 A
BF09 T4 A - BF38 T4 A
BF50 T4 A - BF65 T4 A - BF80 T4 A
BFD80 T4 A - BFD80 40
B115...B630 4

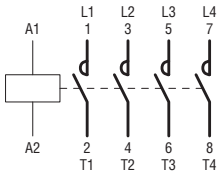

B1250 4 - B1600 4

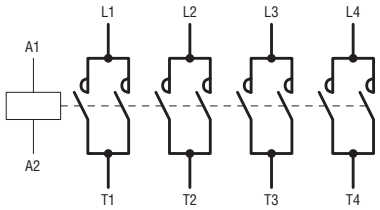

FOUR-POLE CONTACTORS IN DC (AC/DC for BF40E...BF80E)

BG09 T4 D - BGF09 T4 D - BGP09 T4 D

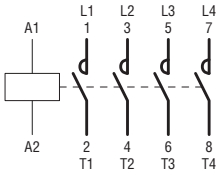

BF09 T4 D - BF38 T4 D
BF09 T4 L - BF38 T4 L

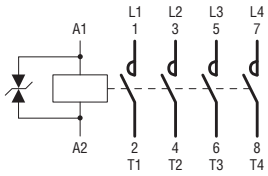

BF65 T4 E - BF80 T4 E
BFD80C 40

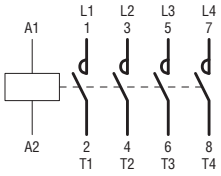

FOUR-POLE CONTACTORS IN AC WITH 2NO AND 2NC POLES

BG09 T2 A

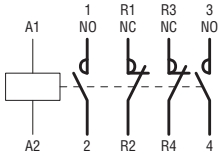

BF09 T2 A - BF18 T2 A - BF26 T2 A - BF38 T2 A
BF80 T2 A

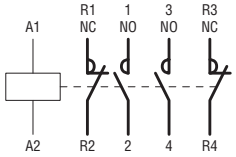

WITH NC FOUR-POLES

BF18 T0 A - BF26 T0 A

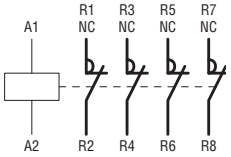

FOUR-POLE CONTACTORS IN DC (AC/DC for BF80T2E) WITH 2NO AND 2NC POLES

BG09 T2 D

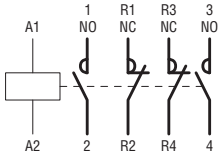

BF18 T2 D - BF26 T2 D - BF38 T2 D - BF80 T2 E
BF18 T2 L - BF26 T2 L - BF38 T2 L

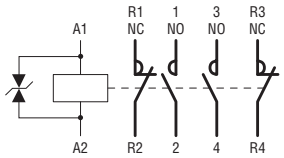

BF80 T2 E

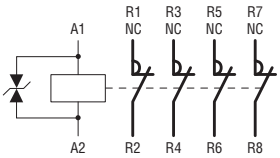

WITH NC FOUR-POLES

BF18 T0 D - BF26 T0 D
BF18 T0 L

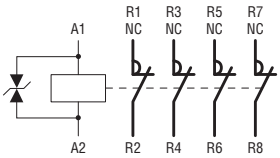

CONTROL RELAY IN AC

BG00 40 A - BGF00 40 A
BF00 40 A

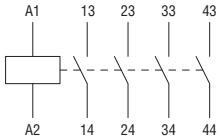

BG00 31 A - BGF00 31 A
BF00 31 A

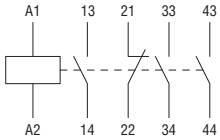

BG00 22 A - BGF00 22 A
BF00 22 A

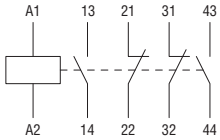

BF00 04 A

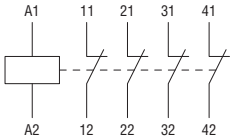

CONTROL RELAY IN DC

BG00 40 D - BGF00 40 D
BG00 40 L - BGF00 40 L

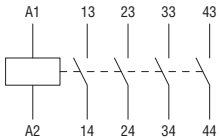

BG00 31 D - BGF00 31 D
BG00 31 L - BGF00 31 L

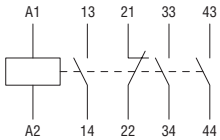

BG00 22 D - BGF00 22 D
BG00 22 L - BGF00 22 L

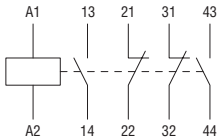

BF00 40 D
BF00 40 L

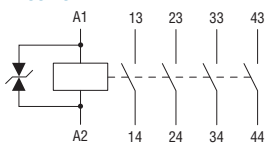

BF00 31 D
BF00 31 L

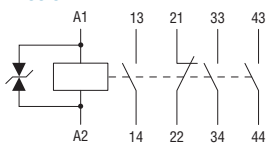

BF00 22 D
BF00 22 L

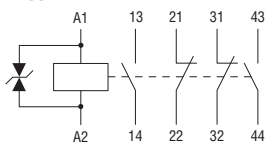

BF00 04 D
BF00 04 L

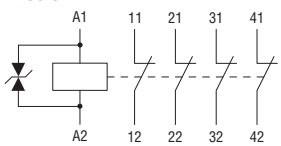

2

ADD-ON BLOCKS FOR BG MINI-CONTACTORS

Auxiliary contacts

BGX10 02
BGXF10 02



BGX10 11
BGXF10 11

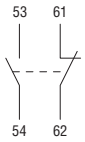

BGX10 20
BGXF10 20



BGX10 04
BGXF10 04

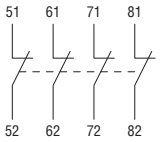

BGX10 13
BGXF10 13

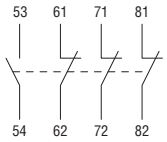

BGX10 22
BGXF10 22

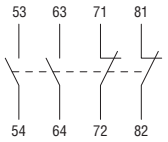

BGX10 31
BGXF10 31

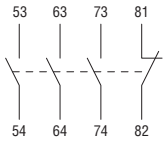

BGX10 40
BGXF10 40

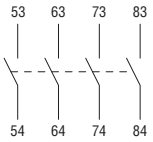

Special auxiliary contacts

BGX11 11

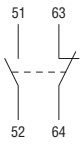

BGX11 22

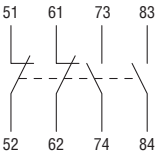

Surge suppressor

BGX77…

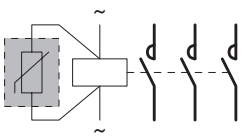

BGX78…

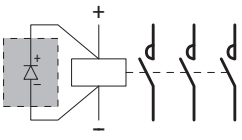

BGX79…

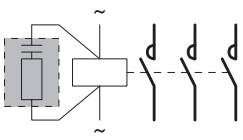

Rigid connections

SMX90 21

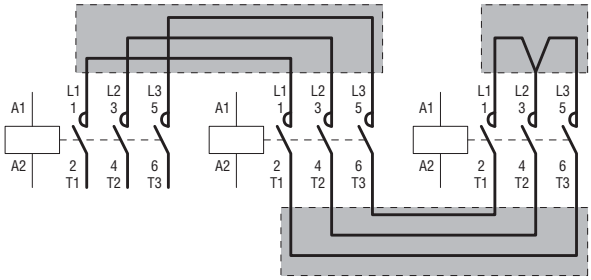

SMX90 22

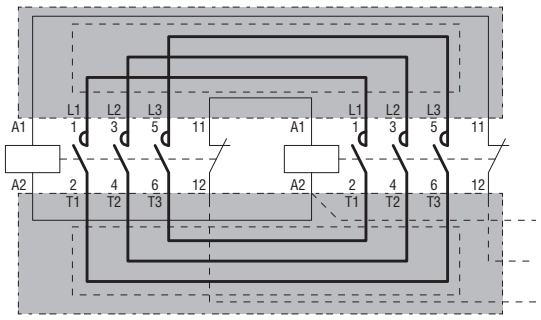

ADD-ON BLOCKS FOR BF CONTACTORS

Auxiliary contacts

BFX10 02

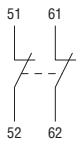

BFX10 11

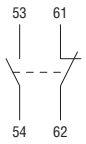

BFX10 20



G484 30

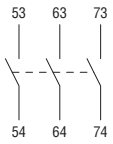

G484 21

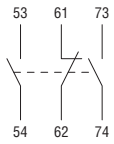

G484 12

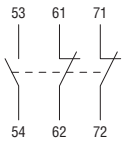

G484 03

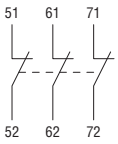

BFX10 04

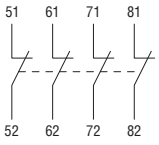

BFX10 13

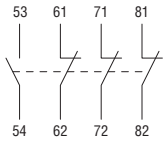

BFX10 22

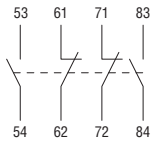

BFX10 31

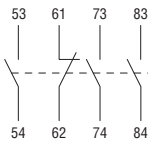

BFX10 40

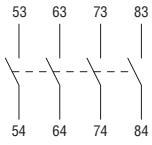

BFX10 11 11

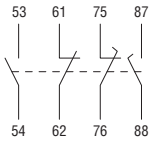

Auxiliary contact

G218

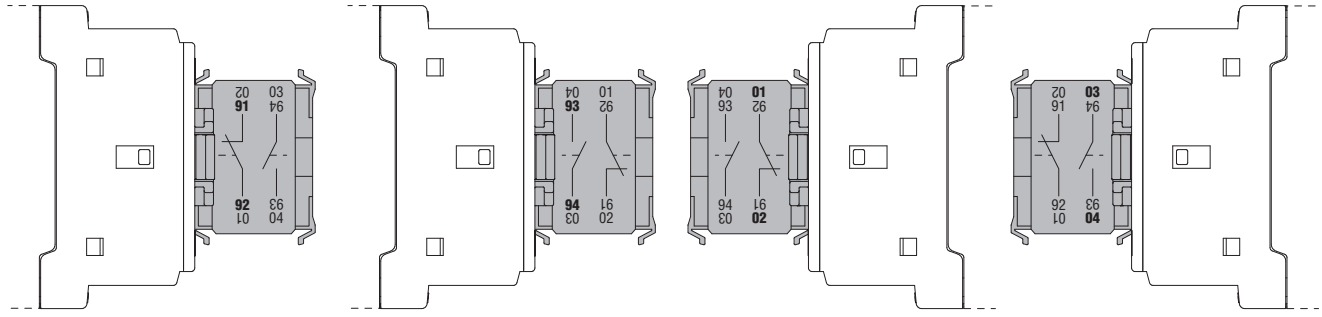

The termination of the G218 auxiliary contact has more than one numbering due to the fact that the block can assume various mounting positions.
See the numbering in boldface for a correct interpretation.

Auxiliary contacts

BFX12 02

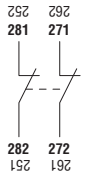

BFX12 11

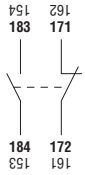

BFX12 20

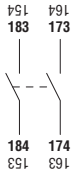

G418 10
G428 10



G418 10A
G428 10A



G418 01
G428 01



G418 01D
G428 01D



G481 20



G481 11

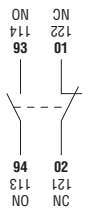

G481 02



G482

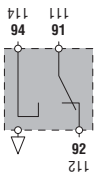

Mechanical latch
G222… - G272…

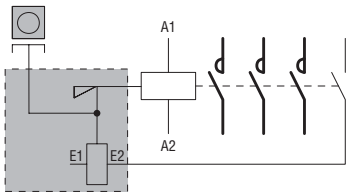

The termination of the BFX12... / G418... / G481... / G482 auxiliary contacts has more than one numbering due to the fact that the block can assume various mounting positions. See the numbering in boldface when the block is mounted on the left side of the contactor.

4th pole
BFX42
BFXD42



Interlock
BFX50 01

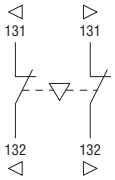

Delayed auxiliary contacts
G485…

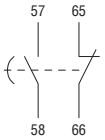

G486… - G487

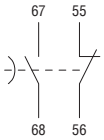

Surge suppressor
G318… - BFX77…

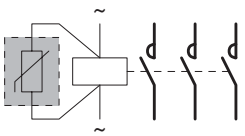

G319 225

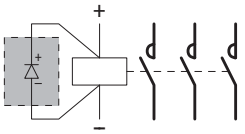

G322… - BFX79…

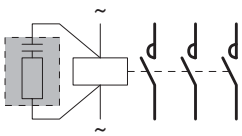

Rigid connecting kits
BFX31 01 - BFX31 02 - BFX32 01

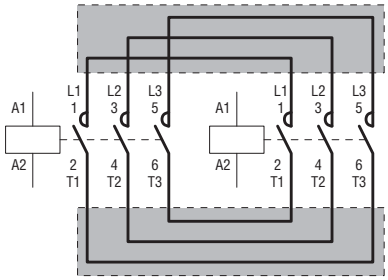

BFX31 31 - BFX32 31 - BFX32 32

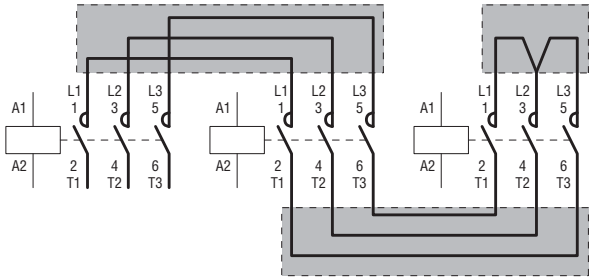

ADD-ON BLOCKS FOR B CONTACTORS
auxiliary contacts
G350 - G354

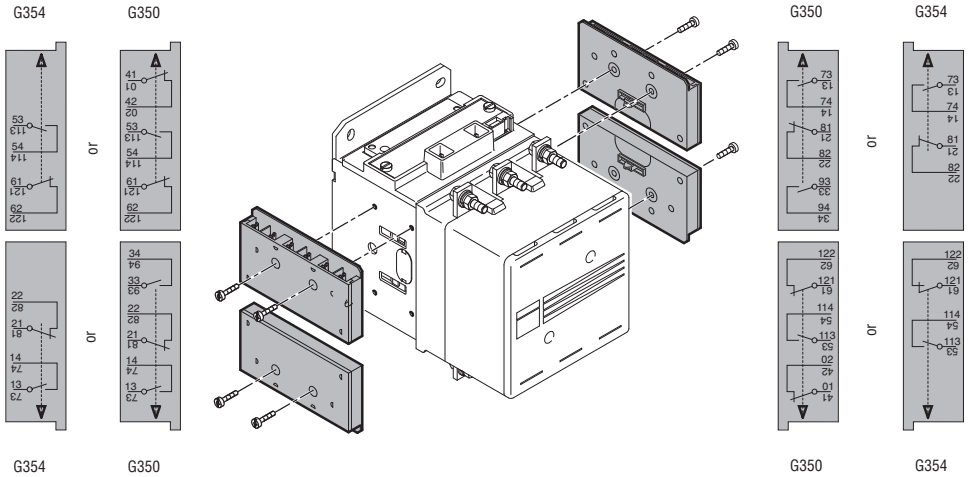

Mechanical latch
G495

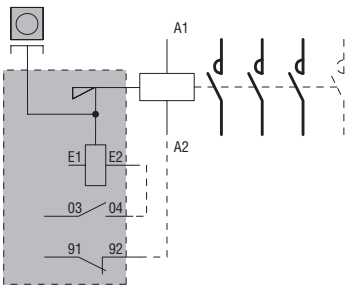

2

MOUNTING POSITION OF CONTACTORS

ON VERTICAL PLANE

The performances given in this catalogue have been established with contactors mounted on a vertical plane with line terminals facing upwards and load terminals facing downwards.
All contactors can be mounted with a ± 30° inclination to the vertical axis of the contactor without any derating.

For BF series contactors, this inclination can reach ± 90°, that is with the terminals are facing towards left and right.
For BG mini-contactors:
– Position A, with coil terminals A1-A2 facing downwards, is not recommended.
– The position with coil terminals A1-A2 facing upwards is not recommended for mini-contactors with NC contacts.

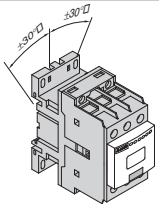

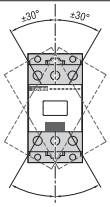

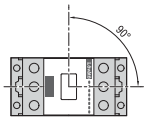

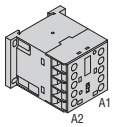

Pos. A

ON VERTICAL PLANE WITH 30° INCLINATION

All contactors can be mounted on a plane which varies in respect to the vertical up to ± 30° angle.
On the average, a 5% increase of the minimum pick-up voltage in -30° position can be noted.

This inclination is greater than the one prescribed by main naval registers.

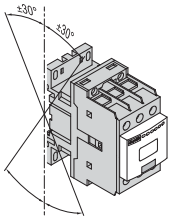

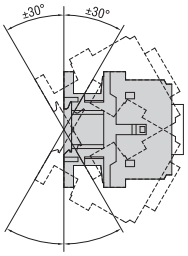

ON HORIZONTAL PLANE (FOR BF SERIES CONTACTORS)

Considerable performance variations can be noted.
It is necessary to check the two possible mounting positions:
– when the contactor is energised, the movable equipment moves upwards.
– when the contactor is energised, the movable equipment moves downwards.
In the first case, it is difficult to close the contactor while in the second, to open it.

The variables which could influence the contactor performance, in addition to the two mounting positions, are:
– type of contactor
– type of control
– contact configuration
– number and type of add-on blocks
– permissible tolerance of auxiliary voltage variation
– ambient temperature.
NOTE: Position B is not recommendable.

Our Customer Service (Tel. 035 4282422; E-mail: service@LovatoElectric.com) can provide further information concerning operational performance of contactors mounted on a horizontal plane.

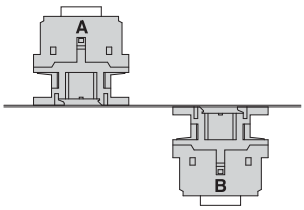

DYNAMIC TYPE TESTS

Our contactors have sustained dynamic testing, with contactor mounting position rotated ± 22.5° in respect to the three orthogonal axes.

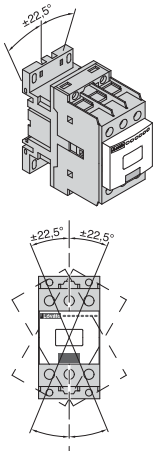

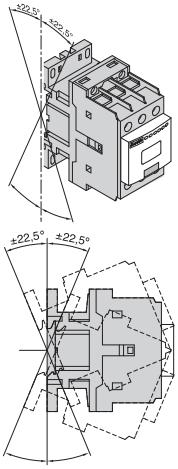

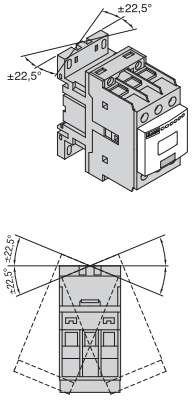

IEC UTILISATION CATEGORY AC3
POLE CHARACTERISTICS
Squirrel-cage induction motors; breaking at rated motor current.

MAXIMUM IEC OPERATIONAL POWER at ambient temperature ≤55°C.

UL/CSA DUTY FOR AC MOTOR SWITCHING
MAGNETIC MOTOR CONTROLLERS
Three-phase AC induction motors; breaking at rated motor current.
UL/CSA RATINGS at ambient temperature ≤55°C

Contactor type	IEC operational current (Ue ≤440V) [A]	IEC operational power 220/230V [kW]	380/400V [kW]	415V [kW]	440V [kW]	500V [kW]	660/690V [kW]	1000V [kW]	Maximum horsepower ratings (60Hz) Three phase 200-208V [HP]	240V [HP]	480V [HP]	600V [HP]
BG06	6	1.5	2.2	2.4	2.5	3	3	–	1½	2	3	3
BG09	9	2.2	4.0	4.3	4.5	5	5	–	2	3	5	5
BG12	12	3.2	5.7	6.2	5.5	5	5	–	3	3	7½	10
BF09	9	2.2	4.2	4.5	4.8	5.5	7.5	–	3	3	5	7 ½
BF12	12	3.2	5.7	6.2	6.2	7.5	10	–	5	5	7½	10
BF18	18	4	7.5	9	9	10	10	–	5	5	10	15
BF25	25	7.0	12.5	13.4	13.4	15	18	–	7½	7½	15	15
BF26	26	7.3	13	14	14	15.6	18.5	–	7½	7½	15	20
BF32	32	8.8	16	17	17	20	22	–	10	10	20	25
BF38	38	11	18.5	18.5	18.5	20	22	–	10	15	30	30
BF40	40	11	18.5	22	22	22	30	18	10	15	30	40
BF50	50	15	22	30	30	30	37	22	10	15	30	40
BF65	65	18.5	30	37	37	37	45	30	20	25	50	60
BF80	80	22	45	45	45	55	75	37	25	30	60	75
BF95	95	27.6	50	55	55	56	74	45	30	30	60	75
BF110	110	33	61	66	70	59	80	45	30	40	75	100
B115	110	33	61	66	70	80	100	63	30	40	75	100
B145	150	46	80	88	93	100	120	75	50	50	100	125
B180	185	57	100	108	115	123	144	103	60	75	150	150
B250	265	83	140	155	164	176	212	156	75	100	200	250
B310	320	100	170	188	200	213	256	180	100	125	250	300
B400	420	130	225	247	263	271	352	208	125	150	350	400
B500	520	156	290	306	328	367	416	312	150 ❶	200 ❶	400 ❶	450 ❶
B630	630	198	335	368	368	368	440	368	200 ❶	250 ❶	500 ❶	500 ❶

❶ No UL/CSA ratings; data given for indication and reference purposes only.

ELECTRICAL IEC LIFE FOR MOTOR CONTROL AC3 ≤440V
Electrical life of contactors

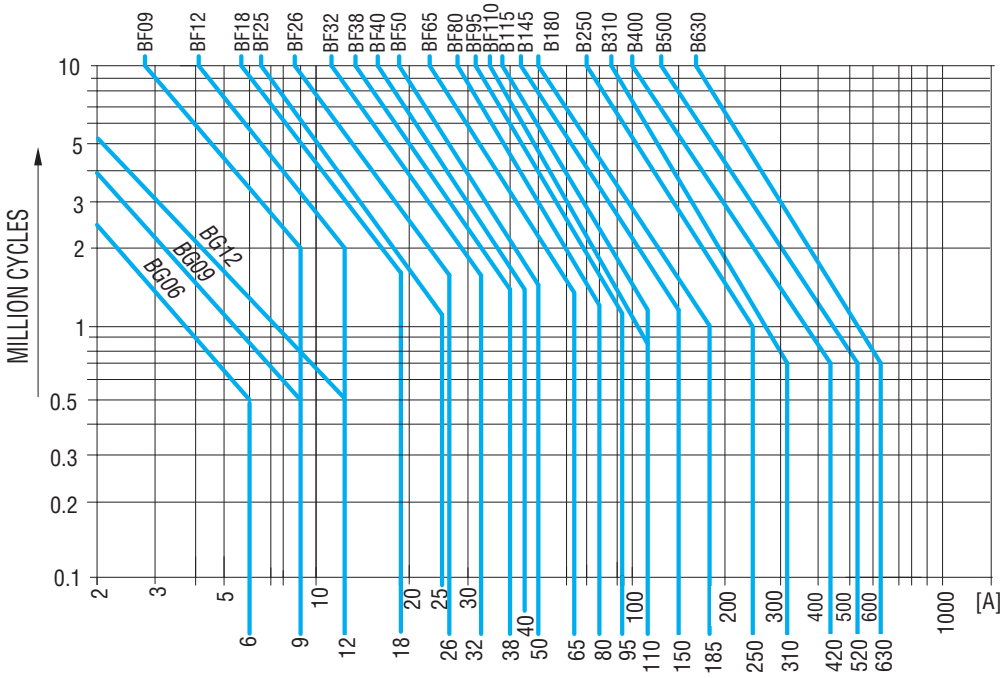

IEC DC UTILISATION CATEGORY
POLE CHARACTERISTICS

2

MAXIMUM OPERATIONAL CURRENT

IEC Voltage Ue	Contactor Type	IEC Maximum current Ie [A] in categories: DC1 with L/R ≤ 1ms and poles in series 1	2	3	4	DC3 - DC5 with L/R ≤ 15ms and poles in series 1	2	3	4
≤ 24V	**BG06**	9	12	14	–	6	7	9	–
	BG09	12	15	16	16	7	8	10	10
	BG12	12	15	16	–	7	8	10	–
	BF09	15	18	20	20	10	13	15	15
	BF12	17	20	22	20	12	15	18	15
	BF18	17	20	22	22	12	15	18	18
	BF25	20	23	23	–	15	18	22	–
	BF26	25	28	28	28	18	20	25	30
	BF32	30	32	32	–	20	25	30	–
	BF38	35	36	36	36	24	28	32	32
	BF40	40	48	48	–	27	32	40	–
	BF50	45	60	60	60	30	35	50	55
	BF65	50	70	70	70	35	45	55	60
	BF80	70	100	100	100	40	60	80	90
	BF95	70	100	100	–	40	60	80	–
	BF110	70	100	100	–	40	60	80	–
48V	**BG06**	8	11	14	–	5	7	9	–
	BG09	10	14	16	16	6	8	10	10
	BG12	10	14	16	–	6	8	10	–
	BF09	13	18	20	20	9	11	15	15
	BF12	15	20	22	20	11	13	18	15
	BF18	15	20	22	22	11	13	18	18
	BF25	18	23	23	–	13	18	22	–
	BF26	21	28	28	28	15	20	25	30
	BF32	26	32	32	–	17	22	28	–
	BF38	30	34	34	34	20	25	28	28
	BF40	35	48	48	–	23	30	40	–
	BF50	40	60	60	60	25	35	50	55
	BF65	50	70	70	70	25	40	50	60
	BF80	60	100	100	100	30	50	70	90
	BF95	60	100	100	–	30	55	75	–
	BF110	60	100	100	–	30	55	75	–
75V	**BG06**	4	7	8	–	2	4	5	–
	BG09	4	9	10	10	2	5	6	6
	BG12	4	9	10	–	2	5	6	–
	BF09	12	17	20	20	8	10	13	15
	BF12	13	18	20	20	10	12	15	15
	BF18	15	20	20	20	11	13	16	16
	BF25	18	23	23	–	13	16	18	–
	BF26	18	25	25	25	13	18	20	25
	BF32	22	28	32	–	15	20	28	–
	BF38	23	29	33	33	17	22	28	28
	BF40	30	45	48	–	19	27	38	–
	BF50	40	60	60	60	22	30	45	55
	BF65	50	70	70	70	25	40	50	60
	BF80	60	100	100	100	30	50	70	90
	BF95	60	100	100	–	30	50	70	–
	BF110	60	100	100	–	30	50	70	–

POLE CHARACTERISTICS

MAXIMUM OPERATIONAL CURRENT

IEC Voltage Ue	Contactor Type	IEC Maximum current Ie [A] in categories: DC1 with L/R ≤ 1ms and poles in series				DC3 - DC5 with L/R ≤ 15ms and poles in series			
		1	2	3	4	1	2	3	4
110V	**BG06**	3	6	8	–	1	3	4	–
	BG09	3	8	10	10	1	4	5	5
	BG12	3	8	10	–	1	4	5	–
	BF09	6	12	15	16	2	7	11	12
	BF12	6	13	16	16	2	8	12	16
	BF18	6	13	16	18	2	8	12	13
	BF25	6	16	18	–	2	10	15	–
	BF26	6	22	24	24	2	13	18	20
	BF32	8	25	27	–	2.5	15	20	–
	BF38	8	32	34	34	2.5	18	23	23
	BF40	8	42	44	–	3	22	27	–
	BF50	8	50	55	60	3	25	30	45
	BF65	8	60	60	70	3	30	35	50
	BF80	8	80	85	100	3	40	60	75
	BF95	8	80	85	–	3	40	60	–
	BF110	8	80	85	–	3	40	60	–
160V	**BG06**	–	4	6	–	–	2	3	–
	BG09	–	4	8	8	–	3	4	4
	BG12	–	4	8	–	–	3	4	–
220V	**BG06**	-	-	1	-	-	-	0.5	-
	BG09	-	-	2	2	-	-	0.8	0.8
	BG12	-	-	2	-	-	-	0.8	-
	BF09	4	8	10	12	0.75	1.5	5	7
	BF12	4	8	11	12	0.75	1.5	6	7
	BF18	4	8	11	13	0.75	1.5	6	8
	BF25	4	8	12	–	0.75	1.5	8	–
	BF26	5	12	14	14	0.75	1.5	10	15
	BF32	5	14	16	–	1	3	12	–
	BF38	5	20	26	26	1	4	15	15
	BF40	6	28	36	–	1	5	17	–
	BF50	6	36	45	50	1	5	20	25
	BF65	6	36	50	60	1	5	25	30
	BF80	6	40	55	70	1	7	35	40
	BF95	6	40	55	–	1	7	35	–
	BF110	6	40	55	–	1	7	35	–
300V	**BF09**	–	–	–	10	–	–	–	5
	BF18	–	–	–	11	–	–	–	5
	BF26	–	–	–	16	–	–	–	10
	BF38	–	–	–	25	–	–	–	12
	BF50	–	–	–	50	–	–	–	21
	BF65	–	–	–	60	–	–	–	25
	BF80	–	–	–	70	–	–	–	35

IEC DC UTILISATION CATEGORY
POLE CHARACTERISTICS

MAXIMUM OPERATIONAL CURRENT

2

IEC Voltage Ue	Contactor Type	IEC Maximum current Ie [A] in categories: DC1 with L/R ≤ 1ms and poles in series				DC3 - DC5 with L/R ≤ 15ms and poles in series			
		1	2	3	4	1	2	3	4
75V	**B115**	160	160	160	160	140	140	140	140
	B145	220	220	220	220	160	160	160	160
	B180	260	260	260	260	180	180	180	180
	B250	350	350	350	350	280	280	280	280
	B310	375	375	375	375	310	310	310	310
	B400	400	400	400	400	350	350	350	350
	B500	650	650	650	650	550	550	550	550
	B630	800	800	800	800	800	800	800	800
110V	**B115**	100	130	130	130	70	100	120	120
	B145	110	150	150	150	80	120	140	140
	B180	120	170	170	170	90	140	160	160
	B250	160	300	300	300	150	250	280	280
	B310	195	350	350	350	170	290	310	310
	B400	250	400	400	400	200	350	350	350
	B500	320	550	600	600	320	550	550	550
	B630	460	800	800	800	460	800	800	800
220V	**B115**	–	100	130	130	–	80	100	120
	B145	–	130	150	150	–	90	120	140
	B180	–	150	170	170	–	100	140	160
	B250	–	250	300	300	–	200	250	280
	B310	–	300	350	350	–	230	290	310
	B400	–	350	400	400	–	280	350	350
	B500	–	450	600	600	–	450	550	550
	B630	–	700	800	800	–	700	800	800
330V	**B115**	–	–	100	130	–	–	80	120
	B145	-	-	130	150	–	–	90	140
	B180	–	–	150	170	–	–	100	160
	B250	–	–	250	300	–	–	200	280
	B310	–	–	300	350	–	–	230	310
	B400	–	–	350	400	–	–	280	350
	B500	–	–	450	600	–	–	450	550
	B630	–	–	700	750	–	–	650	700
460V	**B115**	–	–	–	100	–	–	–	80
	B145	–	–	–	130	–	–	–	90
	B180	–	–	–	150	–	–	–	100
	B250	–	–	–	250	–	–	–	200
	B310	–	–	–	300	–	–	–	230
	B400	–	–	–	350	–	–	–	280
	B500	–	–	–	450	–	–	–	450
	B630	–	–	–	700	–	–	–	700

IEC UTILISATION CATEGORIES DC1, DC3 AND DC5.
POLE CHARACTERISTICS

CHOICE CRITERIA
The elements to be considered for the contactor choice are:
– Rated operational current Ie
– Rated operational voltage Ue
– Utilisation category and L/R time constant
– Eventual verification of electrical life.

OPERATING CONDITIONS
Indicated current is valid for:
– Ambient temperature ≤ 55°C
– Operating cycles: up to 120 cy/h with 60% on-load factor
up to 250 cy/h with 30% on-load factor.

POLES IN SERIES
It is important to use contactors with the indicated number of poles in series depending on operating voltage.
The poles in series can be connected to one single polarity or divided between the two polarities of the circuit indifferently.
NOTE. For voltages lower than 30V, the diagrams given in figures 3 and 4 are not recommendable since voltage drops can take place. In these cases, it is better to use poles in parallel considering the notes given in the following section.

Examples of poles in series:

1 POLE

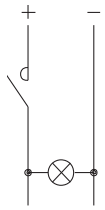

Fig. 1

2 POLES

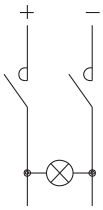

Fig. 2

3 POLES

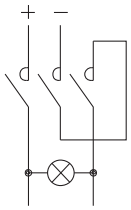

Fig. 3

4 POLES

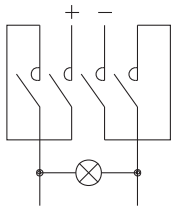

Fig. 4

POLES IN PARALLEL
It is possible to increase the electrical life by placing poles in series when using voltages which require 1 or 2 poles in parallel.
Poles in parallel do not increase the maximum operational current given in the previous pages; that is, if one pole has a maximum operational current in DC5 of 8A, two poles in parallel, it will always be 8A.
With poles in parallel, it is possible to increase the rated contact capacity (Ith) only if the contactor opens and closes in no-load conditions or when used as resistance shunts.
In this case, the contact capacity can be increased.
The value can be obtained by multiplying the rated current of one pole by the K factor given below; e.g.: if one pole carries 10A, three poles in parallel can carry 10 x 2.2 = 22A.
Therefore, the operating current is the one indicated in the tables, multiplied by the K factor given below which takes into consideration the unequal current division on the various poles.
2 POLES in parallel K = 1.6
3 POLES in parallel K = 2.2
4 POLES in parallel K = 2.8

Examples of poles in parallel:

1 POLE in series and
2 POLES in parallel



Fig. 5

1 POLE in series and
3 POLES in parallel

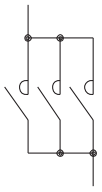

Fig. 6

1 POLE in series and
4 POLES in parallel

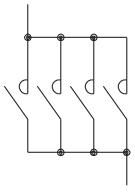

Fig. 7

2 POLE in series and
2 POLES in parallel

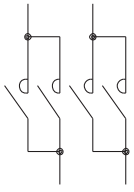

Fig. 8

MAXIMUM OPERATIONAL CURRENT
See tables on pages 2-50 to 2-52.

OTHER CONDITIONS
For different operating conditions or voltage not included among those indicated in the tables, on pages 2-50 to 2-52, consult Customer Service (Tel. 035 4282422; E-mail: service@LovatoElectric.com).

2

IEC SELECTION GUIDE FOR LIGHTING CIRCUIT SWITCHING

GENERAL INFORMATION

The elements which are to be considered for the contactor choice are:
- Type of lamp
- Power factor (cosφ)
- With or without power factor correction
- Value of current when switching on and in running conditions.

Depending on the number and type of lamps, it is also important to bear in mind the main discriminating characteristics given below for the contactor choice:
- Incandescent lamps → contactor making capacity
- Lamps not corrected → rated contactor current in AC1
- Lamps corrected → rated contactor current in AC3

The table below summarises the major characteristics depending on the more commonly used type of lamps:

Type of lamps	Switching on Multiple of In❶	cosφ	Switching off Multiple of In❶	cosφ
Incandescent	15	1	1	1
Mixed light	1.3	1	1	1
Fluorescent	1.15 - 1.3	0.2	1	0.3 - 0.5 (not corrected) 1 (corrected)
High-pressure mercury vapour	1.5 - 1.75	0.2	1	0.45 - 0.7 (not corrected)
High-pressure sodium vapour	1.3 - 1.5	0.2	1	0.3 - 0.5 (not corrected)
Low-pressure sodium vapour	1	0.2 - 0.5	1	0.2 - 0.5 (not corrected)
Metal halide	1.7 - 2.1	0.2	1	0.4 - 0.5 (not corrected)
LED	20...40 ❺	0.6...0.95	1	0.6...0.95

Lamp features		Lamp power	Rated current	Capacitor capacity	Maximum number [n] of lamps for each contactor pole ❷										
					BG06 BG09 BG12	BF09 BF12 BF18	BF25	BF26 BF32	BF38	BF40 BF50	BF65	BF80 BF95 BF110	B115	B145	B180
		[W]	[A]	[µF]											
INCANDESCENT	50/60Hz	60	0.27	-	30	48	92	118	129	203	240	296	370	425	462
220...240V		100	0.45	-	18	28	55	71	77	122	144	177	222	255	277
		200	0.91	-	8	14	27	35	38	60	71	87	109	126	137
		300	1.4	-	5	9	17	22	25	39	46	57	71	82	89
		500	2.3	-	3	5	10	13	15	23	28	34	43	50	54
		1000	4.6	-	1	2	5	6	7	11	14	17	21	25	27
MIXED LIGHT	50/60Hz	100	0.45	-	20	33	57	77	88	122	144	177	244	311	377
220...240V		160	0.72	-	12	20	36	48	55	76	90	111	152	194	236
		250	1.13	-	8	13	23	30	35	48	57	70	97	123	150
		500	2.3	-	4	6	11	15	17	23	28	34	47	60	73
		1000	4.6	-	1	3	5	7	8	11	14	17	23	30	36
ELECTRONIC BALLAST FLUORESCENT	Single mounting	16 / 18	0.1	(6.8) ❸	48	80	160	220	220	400	450	500	750	1050	1200
		32 / 36	0.18	(6.8) ❸	27	44	88	122	122	222	250	277	416	583	666
220...240V 50/60Hz (EVG)		50 / 58	0.27	(10) ❸	17	29	59	82	82	148	166	185	277	388	444
	Dual mounting	2x16 / 18	0.18	(10) ❸	26	44	88	122	122	222	250	277	416	583	666
		2x32 / 36	0.35	(10) ❸	13	22	45	62	62	114	128	142	214	300	342
		2x50 / 58	0.52	(22) ❸	9	15	30	42	42	76	86	96	144	201	230
STANDARD FLUORESCENT	Not corrected Single mounting	15	0.35	-	25	42	74	100	114	157	185	228	314	400	485
220...240V 50/60Hz		20	0.37	-	24	40	70	94	108	148	175	216	297	378	459
		40	0.44	-	20	34	59	79	90	125	147	181	250	318	386
		65	0.7	-	12	21	37	50	57	78	92	114	157	200	242
		115	1.5	-	6	10	17	23	26	36	43	53	73	93	113
		140	1.5	-	6	10	17	23	26	36	43	53	73	93	113
	Corrected Single mounting	15	0.11	4.5	24	40	62	94	94	200	200	200	533	533	533
		20	0.16	4.5	24	40	62	94	94	200	200	200	533	533	533
		40	0.24	4.5	24	40	62	94	94	200	200	200	458	500	520
		65	0.4	7	15	25	40	50	57	125	128	128	275	300	312
		115	0.7	18	6	10	15	23	23	50	50	50	133	133	133
		140	0.7	18	6	10	15	23	23	50	50	50	133	133	133
	DUO circuit	2 x 20	0.26 ❹	-	54	57	100	153	153	211	250	307	423	538	653
		2 x 40	0.46 ❹	-	19	32	56	86	86	119	141	173	239	304	369
		2 x 65	0.7 ❹	-	12	21	37	57	57	78	92	114	157	200	242
		2 x 115	1.3 ❹	-	6	11	20	30	30	42	50	61	84	107	130
		2 x 140	1.5 ❹	-	6	10	17	26	26	36	43	53	73	93	113

❶ In = Rated lamp current.
❷ For 220/240V circuits, either single-phase (between phase and neutral) or 2-wire (between phase and phase), the maximum number of lamps is as per the table.
For three-phase circuits with neutral 380/415V or 220/240V, the maximum number of lamps controlled by the same contactor is n • 3.
For three-phase 380/415V circuits without neutral, the maximum number of lamps controlled by the same contactor is n • √3.
Electrical life is 100,000 cycles up to 55°C.
❸ Incorporated capacitor.
❹ Total.
❺ With reference to the AC side of the power supplies.

Lamp features		Lamp power [W]	Rated current [A]	Capacitor capacity [µF]	Maximum number [n] of lamps for each contactor pole❶ BG06 BG09 BG12	BF09 BF12 BF18	BF25	BF26 BF32	BF38	BF40 BF50	BF65	BF80 BF95 BF110	B115	B145	B180
HIGH-PRESSURE MERCURY VAPOUR 220/240V 50/60Hz	Not corrected	50	0.61	-	10	16	26	36	44	65	73	82	122	172	196
		80	0.8	-	7	12	20	27	33	50	56	62	93	131	150
		125	1.2	-	5	8	13	18	22	33	37	41	62	87	100
		250	2.2	-	3	4	7	10	12	18	20	22	34	47	54
		400	3.4	-	2	3	5	6	7	11	13	14	22	30	35
		700	5.5	-		1	3	4	4	7	8	9	13	19	21
		1000	8	-		1	2	2	3	5	5	6	9	13	15
	Corrected	50	0.29	7	15	25	40	60	60	128	128	128	258	342	342
		80	0.42	8	13	22	35	52	53	95	107	112	178	250	285
		125	0.7	10	8	14	22	31	35	57	64	71	107	150	171
		250	1.3	18	4	7	12	16	19	30	34	38	57	80	92
		400	2.1	25	2	4	7	10	11	19	21	23	35	50	57
		700	3.6	40	-	2	4	6	6	11	12	13	20	29	33
		1000	5.3	60	-	1	3	4	4	7	8	9	14	19	22
380/415V 50/60Hz	Not corrected	2000	8	-		-	1	2	2	3	3	4	5	8	9
	Corrected	2000	5.5	35		-	1	2	2	4	5	5	8	11	13
HIGH-PRESSURE SODIUM VAPOUR 220/240V 50/60Hz	Not corrected	150	1.8	-	3	5	8	12	15	22	25	27	41	58	66
		250	3	-	2	3	5	7	9	13	15	16	25	35	40
		400	4.7	-	1	2	3	4	5	8	9	10	15	22	25
		600	7.1	-	-	1	2	3	3	5	6	6	10	15	16
		1000	10.4	-		-	1	2	2	3	4	4	7	10	11
	Corrected	150	0.83	20	-	9	14	19	21	45	45	45	90	120	120
		250	1.5	36	-	5	7	10	11	25	25	25	50	66	66
		400	2.4	48	-	3	5	6	7	16	18	18	31	43	50
		600	3.5	68	-	2	3	4	4	10	12	12	20	28	34
		1000	6.3	120	-	1	1	2	2	6	7	7	11	16	19
LOW-PRESSURE SODIUM VAPOUR 220/240V 50/60Hz	Not corrected	35	1.5	-	4	6	10	14	18	26	30	33	50	70	80
		55	1.5	-	4	6	10	14	18	26	30	33	50	70	80
		90	2.4	-	3	4	6	9	11	16	18	20	31	43	50
		135	3.1	-	2	3	5	7	8	12	14	16	24	33	38
		150	3.2	-	2	3	5	6	8	12	14	15	23	32	37
		180	3.3	-	2	3	4	6	8	12	13	15	22	31	36
	Corrected	35	0.31	20	-	6	10	14	18	45	45	45	120	120	120
		55	0.42	20	-	6	10	14	18	45	45	45	120	120	120
		90	0.63	30	-	4	6	9	11	30	30	30	80	80	80
		135	0.94	40	-	3	5	7	8	22	22	22	60	60	60
		150	1	40	-	3	5	6	8	22	22	22	60	60	60
		180	1.2	40	-	3	4	6	8	22	22	22	60	60	60
METAL HALIDE 220/240V 50/60Hz	Not corrected	35	0.3	-	-	28	50	66	80	100	150	167	250	330	400
		70	0.5	-	-	16	28	40	50	60	90	100	150	200	240
		150	1	-	-	8	14	20	25	30	45	50	75	100	120
		250	3	-	-	3	5	7	9	13	15	16	25	35	40
		400	3.5	-	-	2	4	6	7	11	12	14	21	30	34
		1000	10	-	-	1	1	2	2	4	4	5	7	10	12
		2000	17	-		-	-	1	1	2	2	2	4	6	7
	Corrected	35	0.17	6	-	33	60	65	65	200	240	260	400	420	440
		70	0.28	12	-	20	36	40	40	120	145	155	240	255	265
		150	0.6	20	-	9	17	18	18	56	68	74	112	118	120
		250	1.5	32	-	5	7	8	10	26	28	28	46	50	53
		400	2	35	-	4	5	6	7	20	22	25	35	37	40
		1000	5.8	95	-	1	1	2	2	6	7	8	12	12	13
		2000	11.5	148	-	-	-	1	1	3	3	4	6	6	6
380/415V 50/60Hz	Not corrected	2000	10.3	-	-	-	-	1	1	2	2	3	4	6	7
		3500	18	-	-	-	-	-	-	1	1	1	2	3	4
	Corrected	2000	6.6	60	-	-	1	1	1	3	3	4	6	7	7
		3500	11.6	100	-	-	-	-	-	2	2	2	3	3	4
LED 220...240V 50/60Hz	See note ❷				Each pole can carry 67% of the rated current AC3 ❷										

❶ For 220/240V circuits, either single-phase (between phase and neutral) or 2-wire (between phase and phase), the maximum number of lamps is as per the table.
For three-phase circuits with neutral 380/415V or 220/240V, the maximum number of lamps controlled by the same contactor is n • 3.
For three-phase 380/415V circuits without neutral, the maximum number of lamps controlled by the same contactor is n • $\sqrt{3}$.
Electrical life is 100,000 cycles up to 55°C.

❷ Usually, each light has its own power supply. If a power supply controls several lights, the number of power supplies must be factored into the calculation. The sum of the rated currents of the power supplies connected to each pole of the contact must not exceed 67% of the rated current AC-3 of the contactor indicated on page 2-4.
e.g. BF18 has a rated current AC-3 of 18A; it can control 18x0.67=12.06A per pole at most.

2

POWER FACTOR CORRECTION CAPACITORS

CHOICE CRITERIA

The contactor during the closing transition is influenced by electrical currents having high frequencies and high amplitudes.
The frequencies of these currents range between 1 and 10kHz; the amplitudes must have values lower than the maximum permissible current peak of the contactor to be used.

AMBIENT OPERATING CONDITIONS

Ambient temperature: ≤ 50 °C.
For temperatures higher than 50°C up to 70 °C, stated maximum operational power ratings are to be reduced by a percentage equal to the difference between the ambient temperature and 50°C.
Operating cycle: ≤ 120 cy/h
Electrical life: ≥ 100,000 cycles.

Contactor	IEC rated current ≤400V	Maximum permissible peak current	IEC maximum operational voltage	Fuse gG	IEC maximum operational power at voltages: 220V 230V 240V	380V 400V	415V 440V	500V 660/690V
Type	[A]	[A]	[V]	[A]	[kvar]	[kvar]	[kvar]	[kvar]
BF09 A	12	500	690	16	4.5	7.5	9	10
BF12 A	18	550	690	25	7	12.5	12	14
BF18 A	23	1000	690	32	9	15	16	18
BF25 A	23	1000	690	32	9	15	16	18
BF26 A	30	1400	690	40	11	20	22	22
BF32 A	36	1700	690	50	14	25	27	30
BF38 A	43	1900	690	63	17	30	30	34
BF40 A	50	2500	1000	100	20	35	40	45
BF50 A	58	2500	1000	80	22	40	41	45
BF65 A	65	2500	1000	100	26	45	50	52
BF80 A	75	2500	1000	125	30	50	56	60
BF95	90	3000	1000	125	34	60	65	70
BF110	90	3000	1000	125	34	60	65	70
B115	130	3200	1000	200	50	87	93	115
B145	150	3400	1000	200	57	100	108	130
B180	170	3600	1000	250	65	112	122	150
B250	240	5100	1000	315	91	158	172	210
B310	265	5900	1000	315	105	184	200	245
B400	320	7500	1000	400	122	211	230	280
B500	500	9000	1000	630	190	330	360	430
B630	610	11000	1000	800	230	400	432	520

The use of contactors with the above operational powers is allowable only when the peak current, in the installation point of the power factor correction board, is lower than the values stated in the table.
If this condition is not verified, it is necessary to use limiting inductances or specific contactors stated on page 2-14. Consult Customer Service (see contact details on inside front cover) to obtain detailed information on the correct use of contactors without limiting inductances.

LIMITING INDUCTANCES

The use of limiting inductances is imperative when the system inductances (line transformer and cables), upstream of the power factor correction panel, are not able to maintain the maximum connecting current within the limit value of the contactor used.

FAST DISCHARGE RESISTANCES OF CAPACITORS

The use of the contactor, according to the wiring diagram given, allows the fast discharge of the capacitors as well as the instantaneous disconnection of the capacitors from the mains when the coil is de-energised.
The resistances, indicated in the following table, guarantee the discharge within a maximum time of 2 seconds.

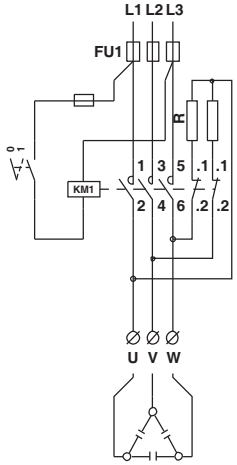

Capacitor power	Voltage 220-230V		Voltage 380-500V	
[kvar]	[Ω]	[W]	[Ω]	[W]
2.5-5	3900	12	8200	12
10-15	1800	25	4300	25
20-50	1000	50	2200	50

SPECIAL CONTACTORS FOR POWER FACTOR CORRECTION CAPACITORS

GENERAL CHARACTERISTICS

These contactors are equipped with early-make contacts. This special type of contact has the purpose of connecting for a very brief interval, 2-3ms, during the contactor closing, resistors which limit the connecting current of the capacitors. These resistors are then excluded when the closing operation is complete and the current capacity is conveyed to the main contacts. With this type of circuit, it is possible to obtain minor wear of all the components of the system especially fuses and capacitors ensuring a longer life and better reliability.
The contactors are particularly suitable for use in automatic power factor correction panels since there is no need of limiting inductances and a source of heat has been eliminated. In this way, these modular electric switchboards can be more compact.

The BFK version, figure 1, is designed for three-phase switching. The peculiarity of this type is in the contacts, suitable to connect limiting resistors, which close only for the time needed to limit any in-rush current peak and then reopen to avoid eventual flow of residual currents through the resistors.

AMBIENT OPERATING CONDITIONS

Ambient temperature: ≤ 50 °C
For ambient temperature higher than 50°C up to 70°C, maximum operational power ratings, indicated in the table, are to be reduced by a percentage equal to the difference between the ambient temperature and 50°C.
Operating cycles: ≤ 120 cy/h.
Electrical life: ≥ 400,000 cycles.

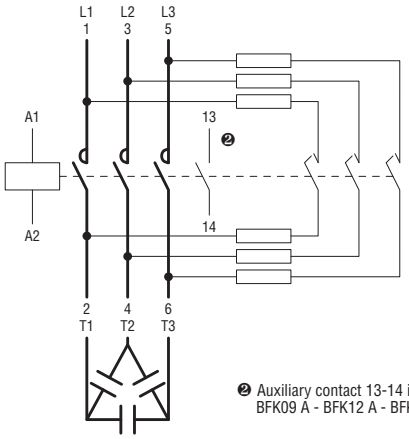

Fig. 1

❷ Auxiliary contact 13-14 is found on BFK09 A - BFK12 A - BFK18 A types only.

Contactor	Built-in auxiliary contacts NO	IEC rated operational current ≤440V	IEC fuse gG	Maximum IEC power at ≤50°C (AC6b) ❶ 220V 230V 240V	380V 400V	415V 440V	500V 690V
Type	n°	[A]	[A]	[kvar]	[kvar]	[kvar]	[kvar]
BFK09 A	1	12	16	4.5	7.5	9	10
BFK12 A	1	18	25	7	12.5	14	16
BFK18 A	1	23	40	9	15	17	20
BFK26 A	—	30	40	11	20	22	25
BFK32 A	—	36	63	14	25	27.5	30
BFK38 A	—	43	63	17	30	33	36
BFK50 A	—	58	80	22	38	41	46
BFK65 A	—	65	100	26	45	50	56
BFK80 A	—	75	125	30	50	56	65
BF80K	—	90	125	34	60	65	70
BF110K❷	—	110	160	45	75	80	100

NOTE: See page 2-14 for order codes.
❶Consult Customer Service (Tel. 035 4282422; E-mail: service@LovatoElectric.com) for the use of contactors to switch within delta connection.
❷ The maximum thermal current Ith of the BF110K contactor is 125A

CHOICE OF CONTACTORS TYPE BFK/BF..K ACCORDING TO cULus LISTING

Contactor	Built-in auxiliary contacts NO (SPST)	UL/CSA rated current ≤440V	UL/CSA protection fuse SC/gG	Maximum UL/CSA operational power at voltage: 240V	480V	600V
Type	n°	[A]	[A]	[kvar]	[kvar]	[kvar]
BFK 09	1	12	16	4.5	9	10
BFK 12	1	18	25	7	14	16
BFK 18	1	23	40	9	17	20
BFK 26	—	30	40	11	22	27.5
BFK 32	—	36	63	14	27.5	32
BFK 38	—	43	63	17	33	36
BFK50 A	—	58	80	22	41	46
BFK65 A	—	65	100	26	50	56
BFK80 A	—	75	125	30	60	65
BF80 K	—	90	125	34	65	70
BF110 K	—	110	160	40	80	100

NOTE: See page 2-14 for order codes.
❶ Consult Customer Service (see contact details on inside front cover) for information about the use of contactors to switch within delta/wye connection.

2

IEC OPERATIONAL CHARACHERISTICS BG00 AND BF00

TYPE			BG00	BF00 A	BF00 D	BF00 L
POLE CONTACT CHARACTERISTICS						
Poles❶		n°	4			
Conventional free air thermal current Ith (≤40°C)		A	10			
Rated insulation voltage Ui		V	690			
Frequency limit		Hz	25...400 ❷			
UL/CSA and IEC/EN 60947-5-1 auxiliary contact designation		AC	A600			
		DC	Q600	P600		
Terminals		A	7.5	8.3		
		B	4	3.5		
		Screw	M3	M3.5		
		Phillips	2	2		
Quick-connect		Faston	1x6.35 - 2x2.8	—		
Tightening torque for contact terminals min-max		Nm	0.8...1	1.5...1.8		
		lbft	0.59-0...74	1.03...1.33		
Tightening torque for coil terminals min-max		Nm	0.8...1			
		lbft	0.59...0.74			
		Phillips	2			
Conductor section connectable with 1 or 2 wires min ... max	AWG stranded	n°	18...12	16...10		
	Flexible w/o lug	mm²	0.75...2.5	1...6		
	Flexible c/w boot-lace ferrule	mm²	2x1.5 or 1x2.5	1...4		
	Flexible c/w spade lug	mm²	2x1.5 or 1x2.5	1...4		
Terminal protection according to IEC/EN 60529			IP20❸			
AMBIENT CONDITIONS						
Operating temperature		°C	-40...+60	-50...+70		
Storage temperature		°C	-55...+70	-60...+80		
Maximum altitude		m	3000			
Operation position	Normal		On vertical plane			
	Allowable		±30°			
Fixing			Screw or on 35mm DIN rail			

❶ The built-in auxiliary contacts are high-conductivity
❷ Derating for use at 61-400 Hz. Consult Customer Service for information (Tel. 035 4282422; E-mail: service@LovatoElectric.com).
❸ IP20 protection warranted by wired equipment; minimum 0.75mm² conductor section for BG00 or 1mm² for BF00.

ELECTRICAL RATINGS BASED ON IEC/EN 60947-5-1 UTILIZATION CATEGORIES AND UL508/CSA C22.2 n°14

IEC/EN designation	IEC/EN utilization category	Conventional enclosed thermal current Ithe	Rated operational current Ie [A] at rated operational voltage Ue										VA rating	
UL designation	—	Thermal continuous test current	Maximum Amperes (AC) 60Hz										Maximum VA	
			120VAC		240VAC		380VAC		480VAC		600VAC			
Alternating current		[A]	Make	Break	Make	Break	Make	Break	Make	Break	Make	Break	Make	Break
A600	AC-15	10	60	6	30	3	19	1.9	15	1.5	12	1.2	7200	720
Direct current			Maximum Amperes (DC) Make or Break											
			125VDC		250VDC		301VDC		400VDC		500VDC		600VDC	300V or less ❺
P600	DC-13	5	1.1		0.55		0.2 ❹		0.31 ❹		0.27 ❹		0.2	138	138
Q600	DC-13	2.5	0.55		0.27		0.1 ❹		0.15 ❹		0.13 ❹		0.1	69	69

❹ Value at 301V is valid for UL/CSA up to 600VDC; the others are valid for IEC/EN.
❺ Voltage valid for UL/CSA only.

TYPE					BG00	BF00 A	BF00 D	BF00 L
AC CONTROL								
Rated control voltage at 50/60Hz or 60Hz				V	12...575	12...600	—	—
Operating voltage limits								
50/60Hz coil powered at	50Hz	pick-up		% Us	75...115	80...110	—	—
		drop-out		% Us	20...55	20...55	—	—
	60Hz	pick-up		% Us	80...115	80...110	—	—
		drop-out		% Us	20...55	20...55	—	—
60Hz coil powered at	60Hz	pick-up		% Us	75...115	80...110	—	—
		drop-out		% Us	20...55	20...55	—	—
Average coil consumption at ≤20°C								
50/60Hz coil powered at	50Hz	in-rush		VA	30	75	—	—
		holding		VA	4	9	—	—
	60Hz	in-rush		VA	25	70	—	—
		holding		VA	3	6.5	—	—
60Hz coil powered at	60Hz	in-rush		VA	30	75	—	—
		holding		VA	4	9	—	—
Dissipation at holding ≤20°C			50Hz	W	0.95	2.5	—	—
DC CONTROL								
Rated control voltage				V	6...250	—	6...415	6...415
Operating voltage limits		pick-up		% Us	75...115	—	70...125	80...110
		drop-out		% Us	10...20	—	10...40	10...40
Average consumption at ≤20°C (in-rush/holding)				W	3.2❶	—	5.4	2.4
OPERATING TIMES								
Average time for Us control in	AC	closing NO		ms	12...21	8...24	—	—
		opening NO		ms	9...18	10...20	—	—
		closing NC		ms	17...26	17...30	—	—
		opening NC		ms	7...17	7...18	—	—
	DC	closing NO		ms	18...25	—	54...66	75...91
		opening NO		ms	2...3	—	14...17	15...19
		closing NC		ms	3...5	—	24...30❷	24...30❸
		opening NC		ms	11...17	—	47...57❷	67...81❸
LIFE								
Mechanical		AC control		cycles	20 million			
		DC control		cycles	20 million			
MAXIMUM OPERATING RATE								
Mechanical operations				cycles/h	3600			

❶ 2.3W for low-consumption BG00...L version.
❷ NC closing time for BF00 04D is 23-29ms while NC opening time is 40-49 ms.
❸ NC closing time for BF00 04L is 25-31ms while NC opening time is 56-68 ms.

2

IEC OPERATIONAL CHARACTERISTICS BG06, BG09 AND BG12

TYPE				BG06	BG09	BG12
POLE CHARACTERISTICS						
Power poles			n°	3	3-4	3
Rated insulation voltage Ui			V	690	690 ❶	690
Rated impulse withstand voltage Uimp			kV	6	6	6
Operational frequency			Hz	25...400 ❷	25...400 ❷	25...400 ❷
Operational current	Conventional free air thermal Ith (≤40°C)		A	16	20	20
	AC3 (≤440V ≤55°C)		A	6	9	12
	AC4 (400V) ❸		A	3.3	4.0	4.8
Short-time allowable current for 10s (IEC/EN 60947-1)			A	96	96	96
Maximum fuse size		gG	A	16	20	20
		aM	A	6	10	16
Making capacity (RMS value)			A	92	92	120
Breaking capacity at voltage		≤ 440V	A	72	72	96
		500V	A	72	72	72
		690V	A	72	72	72
Consumption per pole and resistance (average values)			mΩ	10	10	10
		Ith	W	2.6	4	4
		AC3	W	0.36	0.81	1.44
Terminals			A [mm]	7.5	7.5	7.5
			B [mm]	4	4	4
			screw	M3	M3	M3
			Phillips	2	2	2
		Quick-connect	Faston	—	1x6.35 - 2x2.8	—
		Solder		—	PIN for PCB❹	—
Tightening torque for pole and coil terminals min-max			Nm	0.8...1	0.8...1	0.8...1
			lbft	0.59...0.74	0.59...0.74	0.59...0.74
			Phillips	2	2	2
Conductor section connectable with 1 or 2 wires min...max						
	AWG stranded		N°	18...12		
	Flexible w/o lug		mm²	0.75...2.5		
	Flexible c/w boot-lace ferrule		mm²	2x1.5 or 1x2.5		
	Flexible c/w spade lug		mm²	2x1.5 or 1x2.5		
Terminal protection to IEC/EN 60529				IP20❺		
AUXILIARY CONTACT CHARACTERISTICS						
Type of contact			n°	1-NO or NC based on configuration❻		
Thermal current Ith			A	10		
IEC/EN 60947-5-1 designation			AC	A600		
			DC	Q600		
AMBIENT CONDITIONS						
Operating temperature			°C	-40...+60		
Storage temperature			°C	-55...+70		
Maximum altitude			m	3000		
Operating position		Normal		On vertical plane		
		Allowable		± 30°		
Fixing				Screw or on 35mm DIN rail		

❶ Rated voltage Ui for BGP... types is 500V.
❷ Derating for use at 61-400Hz. Consult Customer Service for information (Tel. 035 4282422; E-mail: service@LovatoElectric.com).
❸ Current values guarantee an electrical life of about 50,000 cycles.
❹ Dimensions and drilling distances are given on page 2-32.
❺ IP20 protection warranted by wired equipment; minimum 0.75mm² conductor section.
❻ NO or NC auxiliary is highly conductive.
Other characteristics are the same as the mechanical characteristics of the poles.

TYPE					BG06	BG09	BG12
AC CONTROL							
Rated voltage at 50/60Hz, 60Hz				V	12...575		
Operating voltage limits							
50/60Hz coil powered at	50Hz	pick-up		% Us	75...115		
		drop-out		% Us	20...55		
	60Hz	pick-up		% Us	80...115		
		drop-out		% Us	20...55		
60Hz coil powered at	60Hz	pick-up		% Us	75...115		
		drop-out		% Us	20...55		
Average coil consumption at ≤20°C							
50/60Hz coil powered at	50Hz	in-rush		VA	30		
		holding		VA	4		
	60Hz	in-rush		VA	25		
		holding		VA	3		
60Hz coil powered at	60Hz	in-rush		VA	30		
		holding		VA	4		
Dissipation at ≤20°C	at 50Hz			W	0.95		
DC CONTROL							
Rated control voltage				V	6...250		
Operating voltage limits	pick-up			% Us	75...115		
	drop-out			% Us	10...25		
Average consumption at ≤20°C (in rush-holding)				W	3.2	3.2❶	3.2
OPERATING TIMES							
Average time for Us control in	AC	closing NO		ms	12...21	12...21	12...21
		opening NO		ms	9...18	9...18	9...18
		closing NC		ms	17...26	17...26	17...26
		opening NC		ms	7...17	7...17	7...17
	DC	closing NO		ms	18...25	18...25	18...25
		opening NO		ms	2...3	2...3	2...3
		closing NC		ms	3...5	3...5	3...5
		opening NC		ms	11...17	11...17	11...17
LIFE							
Mechanical	AC control			cycles	20 million		
	DC control			cycles	20 million		
Electrical (Ie at 400V AC3)				cycles	500,000		
MAXIMUM OPERATING RATE							
Mechanical operations				cy/h	3600		

❶ 2.3W for low-consumption type BG09...L.

ELECTRICAL RATINGS BASED ON IEC/EN 60947-5-1 UTILIZATION CATEGORIES AND UL508/CSA C22.2 n°14

IEC/EN designation	IEC/EN utilization category	Conventional enclosed thermal current Ithe	Rated operational current Ie [A] at rated operational voltage Ue										VA rating	
UL designation	—	Thermal continuous test current	Maximum Amperes (AC) 60Hz										Maximum VA	
			120VAC		240VAC		380VAC		480VAC		600VAC			
Alternating current		[A]	Make	Break	Make	Break	Make	Break	Make	Break	Make	Break	Make	Break
A600	AC-15	10	60	6	30	3	19	1.9	15	1.5	12	1.2	7200	720
Direct current			Maximum Amperes (DC) Make or Break											
			125VDC		250VDC		301VDC		400VDC		500VDC		600VDC		300V or less ❸	
Q600	DC-13	2.5	0.55		0.27		0.1 ❷		0.15 ❷		0.13 ❷		0.1		69	69

❷ Value at 301V is valid for UL/CSA up to 600VDC; the others are valid for IEC/EN.
❸ Voltage valid for UL/CSA only.

2

IEC OPERATIONAL CHARACTERISTICS BF09-BF38

TYPE				BF09	BF12	BF18	BF25	BF26	BF32	BF38
POLE CHARACTERISTICS										
Power poles			n°	3-4	3-4	3-4	3	3-4	3	3-4
Rated insulation voltage Ui			V	690						
Rated impulse withstand votage Uimp			kV	6						
Operational frequency			Hz	25...400❶						
Operational current	Conventional free air thermal Ith (≤40°C)		A	25	28	32	32	45	56	56(60❺)
	AC3 (≤440V ≤55°C)		A	9	12	18	25	26	32	38
	AC4 (400V)❷		A	4.9	7.9	8.5	10	11.5	13.5	15.5
Short-time allowable current for 10s (IEC/EN 60947-1)			A	110	110	130	160	200	320	320
Max fuse size		gG	A	25	32	32	50	50	63	63
		aM	A	10	12	20	25	32	32	40
Making capacity (RMS value)			A	90	120	180	250	260	320	380
Breaking capacity		≤440V	A	72	96	144	200	208	256	304
at voltage		500V	A	72	96	120	184	184	240	240
		690V	A	71	94	94	102	168	192	192
Consumption and resistance per pole (average values)			mΩ	2.5	2.5	2.5	2.5	2.0	2.0	2.0
		Ith	W	1.6	2.0	2.6	2.6	4.0	6.0	6.0
		AC3	W	0.2	0.4	0.8	1.6	1.4	2.0	2.9
Terminals			Type	Clamp-screw						
			A	9.5	9.5	9.5	9.5	13	13	13
			B	4.5	4.5	4.5	4.5	5.5	5.5	5.5
			Screw	M3.5	M3.5	M3.5	M3.5	M4	M4	M4
			Phillips	2	2	2	2	2	2	2
Tightening torque for pole terminal min-max			Nm	1.5...1.8	1,.5...1.8	1.5...1.8	1.5...1.8	2.5...3	2.5...3	2.5...3
			lbft	1.1...1.5	1.1...1.5	1.1...1.5	1.1...1.5	1.8...2.2	1.8...2.2	1.8...2.2
Tightening torque for coil terminals min-max			Nm	0.8-1	0.8-1	0.8-1	0.8-1	0.8-1	0.8-1	0.8-1
			lbft	0.59-0.74	0.59-0.74	0.59-0.74	0.59-0.74	0.59-0.74	0.59-0.74	0.59-0.74
			Phillips	2	2	2	2	2	2	2
Conductor section connectable with 1 or 2 wires min...max	AWG stranded		n°	16...10	16...10	16...10	16...10	14...6	14...6	14...6
	Flexible w/o lug		mm^2	1...6	1...6	1...6	1...6	2.5...16	2.5...16	2.5...16
	Flexible c/w insulated boot-lace ferrule		mm^2	1...4	1...4	1...4	1...4	1...10	1...10	1...10
	Flexible c/w insulated spade lug		mm^2	1...4	1...4	1...4	1...4	1...10	1...10	1...10
Power terminal protection according to IEC/EN 60529				IP20❸	IP20❸	IP20❸	IP20❸	IP20❹	IP20❹	IP20❹
AUXILIARY CONTACT CHARACTERISTICS										
Type of contact			n°	1-NO or NC based on configuration❻				—		
Thermal current Ith			A	10				—		
IEC/EN 60947-5-1 designation			AC	A600				—		
			DC	Q600				—		
AMBIENT CONDITIONS										
Operating temperature			°C	-50...+70						
Storage temperature			°C	-60...+80						
Maximum altitude			m	3000						
Operating position		Normal		On vertical plane						
		Allowable		± 30°						
Fixing				Screw or on 35mm DIN rail						

❶ Derating for use at 61-400Hz. Consult Customer Service for information; see contact details on inside front cover.
❷ Current values guarantee an electrical life of about 200,000 cycles.
❸ IP20 protection warranted by wired equipment; minimum 1mm^2 conductor section.
❹ IP20 protection on front.
❺ For this other current value, use 16mm^2 wire with spade cable terminal.
❻ NO or NC auxiliary is highly conductive. Other characteristics are the same as the mechanical characteristics of the poles.

ELEVATOR EQUIPMENT - Magnetic Motor Controllers per CSA certification File 54332 - Class 2411-03, to requirements of B44.1-04/SME A17.5-2004.
Contactors, three or four poles, open type, operating coil 600VAC or less, 380VDC or less.

Type	Maximum horsepower ratings Single phase		Three phase				CSA General use
	120V	240V	200-208V	240V	480V	600V	
	[HP]	[HP]	[HP]	[HP]	[HP]	[HP]	[A]
BF12	1/2	1 1/2	3	3	7 1/2	7 1/2	28
BF25	1 1/2	3	5	7 1/2	15	15	32
BF38	3	5	10	10	20	20	55

TYPE					BF09	BF12	BF18	BF25	BF26	BF32	BF38
AC CONTROL											
Rated voltage at 50/60Hz, 60Hz				V	12...600						
Operating voltage limits											
50/60Hz coil powered at	50Hz	pick-up		% Us	80...110						
		drop-out		% Us	20...55						
	60Hz	pick-up		% Us	85...110						
		drop-out		% Us	20...55						
60Hz coil powered at	60Hz	pick-up		% Us	80...110						
		drop-out		% Us	20...55						
Average coil consumption at ≤20°C											
50/60Hz coil powered at	50Hz	in-rush		VA	75						
		holding		VA	9						
	60Hz	in-rush		VA	70						
		holding		VA	6.5						
60Hz coil powered at 60Hz	60Hz	in-rush		VA	75						
		holding		VA	9						
Dissipation at holding ≤20°C			50Hz	W	2.5						
DC CONTROL - normal and low consumption											
Rated control voltage				V	6...415						
Operating limits											
pick-up	three-pole BF...D		from	% Us	70						
			to	% Us	125						
	four-pole BF...D		from	%Us	70				80		
			to	%Us	125				125		
	three and four pole BF...L		from	% Us	80						
			to	% Us	110						
drop-out	for all versions		from	%Us	10						
			to	%Us	40						
Average coil consumption ≤20°C (in rush-holding)	BF...D			W	5.4						
	BF...L			W	2.4						
OPERATING TIMES											
Average time for Us control in	AC	closing NO		ms	8...24				8...24		
		opening NO		ms	10...20				5...15		
		closing NC		ms	14...28❶				9...20❷		
		opening NC		ms	7...18❶				9...17❷		
	DC BF...D types	closing NO		ms	54...66				53...65		
		opening NO		ms	14...17				14...18		
		closing NC		ms	24...30❸				23...28		
		opening NC		ms	47...57❸				46...56		
	DC BF...L types	closing NO		ms	75...91				76...92		
		opening NO		ms	15...19				16...20		
		closing NC		ms	24...30❹				25...31		
		opening NC		ms	67...81❹				63...77		
LIFE											
Mechanical (million)	AC control			cycles	20	20	20	20	20	20	20
	DC control			cycles	20	20	20	20	20	20	20
Electrical (Ie at 400V AC3) (million)				cycles	2.0	2.0	1.6	1.2	1.6	1.6	1.4
MAXIMUM OPERATING RATE											
Mechanical operations				cy/h	3600						

❶ NC closing time for BF...T0A types is 9-25ms while NC opening time is 9-15ms.
❷ NC closing time for BF...T0A types is 11-29ms while NC opening time is 6-14ms.
❸ NC closing time for BF...T0D types is 23-29ms while NC opening time is 40-49ms.
❹ NC closing time for BF...T0L types is 25-31ms while NC opening time is 56-68ms.

ELECTRICAL RATINGS BASED ON IEC/EN 60947-5-1 UTILIZATION CATEGORIES AND UL508/CSA C22.2 n°14

IEC/EN designation	IEC/EN utilization category	Conventional enclosed thermal current Ithe	Rated operational current Ie [A] at rated operational voltage Ue										VA rating	
UL designation	—	Thermal continuous test current	Maximum Amperes (AC) 60Hz										Maximum VA	
			120VAC		240VAC		380VAC		480VAC		600VAC			
Alternating current		[A]	Make	Break	Make	Break	Make	Break	Make	Break	Make	Break	Make	Break
A600	AC-15	10	60	6	30	3	19	1.9	15	1.5	12	1.2	7200	720
Direct current			Maximum Amperes (DC) Make or Break											
			125VDC		250VDC		301VDC		400VDC		500VDC		600VDC	300V or less ❻
Q600	DC-13	2.5	0.55		0.27		0.1 ❺		0.15 ❺		0.13 ❺		0.1	69	69

❺ Value at 301V is valid for UL/CSA up to 600VDC; the others are valid for IEC/EN.
❻ Voltage valid for UL/CSA only.

2

IEC OPERATIONAL CHARACTERISTICS BF40...BF110...

TYPE			BF40	BF50	BF65	BF80	BF95	BF110
POLE CHARACTERISTICS								
Power poles		N°	3	3-4	3-4	3-4	3	3
Rated insulation voltage Ui		V	1000					
Rated impulse withstand voltage Uimp		kV	8					
Operational frequency		Hz	25 ... 400❶					
Operational current	Conventional free air thermal Ith (≤40°C)	A	70	90	100	115	125	125
	AC3 (≤440V ≤55°C)	A	40	50	65	80	95	110
	AC4 (400V)❷	A	24	28	31	38	43	43
Short-time allowable current for (IEC/EN 60947-1)	10s	A	390	390	390	480	760	880
Maximum fuse size	gG	A	100	100	125	160	160	160
	aM	A	50	50	80	80	100	125
Making capacity (RMS value)		A	800	800	1090	1200	1200	1200
Breaking capacity at voltage	≤440V	A	800	800	1090	1200	1200	1200
	500V	A	660	660	830	1060	1050	1050
	690V	A	500	500	630	800	800	800
Consumption and resistance per pole (average values)		mΩ	0.8	0.8	0.8	0.6	0.6	0.6
	Ith	W	3.9	8.0	9.7	7.9	9.4	9.4
	AC3	W	1.3	2.0	3.4	3.8	5.4	7.3
Terminals		Type	Double lug clamp terminal ❸ 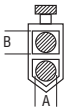				Lug clamp terminal ❸ 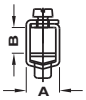	
		A [mm]	9.5	9.5	9.5	9.5	12.3	12.3
		B [mm]	11	11	11	11	12	12
		Screw	M6	M6	M6	M6	M6	M6
		Metric Allen	4	4	4	4	4	4
Tightening torque for pole terminal min-max		Nm	4...5					
		lbft	2.95...3.69					
Tightening torque for coil terminals min-max		Nm	0.8...1					
		lbft	0.59...0.74					
		Phillips	1					
Conductor section connectable with 1 or 2 wires min...max (1 conductor for BF80...110)	AWG	N°	18...2				14...2/0	
	Flexible w/o lug	mm²	1.5...35	1.5...35	1.5...35	1.5...35	6...50	6...50
	Flexible c/w lug	mm²	1.5...35	1.5...35	1.5...35	1.5...35	6...50	6...50
Power terminal protection according to IEC/EN 60529			IP20 front					
AMBIENT CONDITIONS								
Operating temperature		°C	-50...+70					
Storage temperature		°C	-60...+80					
Maximum altitude		m	3000					
Operating position	Normal		On vertical plane					
	Allowable		± 30°					
Fixing			Screw or on 35mm DIN rail					

❶ Derating for use at 61-400 Hz. Consult Customer Service for information; see contact details on inside front cover.
❷ Current values guarantee an electrical life of about 200,000 cycles.
❸ As per IEC/EN 60947-1 designation. In addition to the main terminal which has dimensions as mentioned above, there is a second terminal entry 12.3x3.8mm for flexible busbars.

❶ ELEVATOR EQUIPMENT - Magnetic Motor Controllers per CSA certification File 54332 - Class 2411-03, to requirements of B44.1-04/SME A17.5-2004.
Contactors, three or four poles, open type, operating coil 600VAC or less, 380VDC or less.

Type	Maximum horsepower ratings Single phase 120V	240V	Three phase 200-208V	240V	480V	600V	CSA General use
	[HP]	[HP]	[HP]	[HP]	[HP]	[HP]	[A]
BF65	3	10	15	15	40	50	110

TYPE				BF40	BF50	BF65	BF80	BF95	BF110
AC CONTROL									
Rated voltage at 50/60Hz, 60Hz			V	12...600 (20...250 electronically controlled AC/DC coil)				12...600	
Operating voltage limits									
50/60Hz coil powered at	50Hz	pick-up	% Us	80...110 ❶				80...110	
		drop-out	% Us	20...55 ❷				20...55	
	60Hz	pick-up	% Us	85...110 ❶				85...110	
		drop-out	% Us	40...55 ❷				40...55	
60Hz coil powered at	60Hz	pick-up	% Us	80...110				80...110	
		drop-out	% Us	20...55				20...55	
Average coil consumption at ≤20°C									
50/60Hz coil powered at	50Hz	in-rush	VA	210 (60...125 electronically controlled AC/DC coil)				220	
		holding	VA	15 (1.7...2.3 electronically controlled AC/DC coil)				18	
	60Hz	in-rush	VA	195 (60...125 electronically controlled AC/DC coil)				200	
		holding	VA	13 (1.7...2.3 electronically controlled AC/DC coil)				15	
60Hz coil powered at	60Hz	in-rush	VA	210				220	
		holding	VA	15				18	
Dissipation at ≤20°C	50Hz		W	5 (1.7...2.3 electronically controlled AC/DC coil)				6	
DC CONTROL									
Rated voltage			V	20...250				12...600	
Operating voltage limits		pick-up	% Us	80...110 ❶				80...110	
		drop-up	% Us	20...55 ❷				10...25	
Average consumption ≤20°C (in rush-holding)			W	60...125 / 1.7...2.3				15/15	
OPERATING TIMES									
Average time for Us control in	AC	closing NO	ms	12...28 (75...105 electronically controlled AC/DC coil)				13...28	
		opening NO	ms	8...22 (40...70 electronically controlled AC/DC coil)				6...19	
	DC	closing NO	ms	40...65 (65...100 electronically controlled AC/DC coil)				60...90	
		opening NO	ms	30...60 (40...80 electronically controlled AC/DC coil)				7...12	
LIFE									
Mechanical (million)	AC control		cycles	15	15	15	15	15	15
	DC control		cycles	15	15	15	15	15	15
Electrical (Ie at 400V in AC3) (million)			cycles	1.5	1.4	1.4	1.3	1.2	0.8
MAXIMUM OPERATING RATE									
Mechanical operations			cy/h	3600					

❶ For electronically controlled AC/DC coils 80% of Us min. and 110% of Us max.

❷ For electronically controlled AC/DC coils 20% of Us min. and 55% of Us max.

2

IEC OPERATIONAL CHARACTERISTICS B115 - B1600...

TYPE				B115	B145	B180	B250	B310	B400	B500	B630	B630 1000	B1250	B1600
POLE CHARACTERISTICS														
Power poles			n°	3-4	3-4	3-4	3-4	3-4	3-4	3-4	3-4	3-4	3-4	3-4
Rated insulation voltage Ui			V	1000										
Rated impulse withstand votage Uimp			kV	8										
Operational frequency			Hz	25-400❶										
Operational current	Conventional free air thermal Ith (≤40°C)		A	160	250	275	350	450	550	700	800	1000	1250	1600
	AC3 (≤440V ≤55°C)		A	110	150	185	265	320	420	520	630	–	–	–
	AC4 (400V)❷		A	47	57	65	92	110	133	175	210	–	–	–
Short-time allowable current for 10s (IEC/EN 60947-1)			A	1100	1300	1500	2200	2900	3600	4050	5040	5600	6500	8300
Maximum fuse size		gG	A	200	250	315	400	500	630	800	1000	1000	1250	1600
		aM	A	125	160	200	250	400	400	500	630	–	–	–
Making capacity (RMS value)			A	1100	1500	1850	2750	3150	4200	5000	6300	6300	6300	6300
Breaking capacity at voltage		≤440V	A	1300	1500	1850	2500	3000	4000	5000	6300	6300	6300	6300
		500V	A	1100	1400	1600	2250	2700	3400	4500	5600	5600	5600	5600
		690V	A	880	1200	1480	2200	2520	3360	4000	5000	5000	5000	5000
		1000V	A	600	800	1000	1500	1700	2300	2700	3400	3400	3400	3400
Consumption and resistance per pole (average values)			mΩ	0.30	0.30	0.30	0.20	0.20	0.20	0.14	0.14	0.14	0.07	0.07
		Ith	W	7.7	14.5	20.3	24.5	40.5	52.0	68.6	90	140	110	180
		AC3	W	4.0	6.8	9.7	12.5	20	32	35.0	56	–	–	–
Terminals 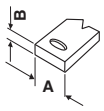			A mm	15 (0.6")	20 (0.8")	20 (0.8")	25 (1")	25 (1")	25 (1")	35 (1.4")	40 (1.6")	60 (2.4")	80 (3.1")	80 (3.1")
			B mm	4 (0.16")	4 (0.16")	4 (0.16")	5 (0.2")	5 (0.2")	5 (0.2")	6 (0.23")	6 (0.23")	6 (0.23")	10 (0.39")	10 (0.39")
			Screw + hex nut	M6	M8	M8	M10	M10	M10	M10	M12	2-M12	2-M12	2-M12
			❸ mm	10 (0.39")	13 (0.51")	13 (0.51")	17 (0.67")	17 (0.67")	17 (0.67")	17 (0.67")	19 (0.75")	19 (0.75")	19 (0.75")	19 (0.75")
	Quick-connect (coil)		Faston	1x6.35mm (0.25") or 2x2.8mm (0.11")										
	Coil with G371❹		Phillips	2 (Ø7mm/0.3in)										
Pole tightening torque			Nm	10	18	18	35	35	35	35	55	55	55	55
			lbft	7.4	13.3	13.3	25.8	25.8	25.8	25.8	40.6	40.6	40.6	40.6
Coil tightening torque with G371❹ fitted			Nm	1										
			lbft	0.74										
Maximum conductor section	1 or 2 bars		mm	20x3 (0.2x0.12")	25x3 (1x0.12")	25x3 (1x0.12")	30x4 (1.2x0.16")	30x5 (1.2x0.2")	30x5 (1.2x0.2")	50x5 (2x0.2")	60x5 (2.4x0.2")	60x5 (2.4x0.2")	100x5 (4x0.2")	100x5 (4x0.2")
	N° 1 wire with lug		mm^2	70	120	150	240	–	–	–	–	–	–	–
	N° 2 wire with lug		mm^2	–	–	–	–	150	150	240	240	–	–	–
AMBIENT CONDITIONS														
Operating temperature			°C	-50...+70									-20...+60	
Storage temperature			°C	-60...+80									-30...+80	
Maximum altitude			m	3000										
Operating position	Normal			Vertical										
	Allowable			± 30°										
Fixing				Screw										

❶ Derating for use at 61-400 Hz. Consult Customer Service for information (Tel. 035 4282422; E-mail: service@LovatoElectric.com).
❷ Current values guarantee an electrical life of about 200,000 cycles.
❸ Spanner/wrench size.
❹ G371: Adapter to transform coil faston terminals into screw type.

TYPE			B115	B145	B180	B250	B310	B400	B500	B630	B630 1000	B1250	B1600
AC CONTROL													
Supply voltage			Either in AC/DC									Only AC	
Rated control voltage		V	24...480	24...480	24...480	24...480	24...480	24...480	48...480	48...480	48...480	110/240	110/240
Operating voltage limits	pick-up	% Us	80...110	80...110	80...110	80...110	80...110	80...110	80...110	80...110	80...110	80...110	80...110
	drop-out	% Us	20...60	20...60	20...60	20...60	20...60	20...60	20...60	20...60	20...60	20...60	20...60
Consumption at ≤20°C	in-rush	VA/W	300	300	300	300	300	300	400	400	400	800	800
	holding	VA/W	10	10	10	10	10	10	18	18	18	45	45
Dissipation at ≤20°C		W	10	10	10	10	10	10	18	18	18	40	40
OPERATING TIMES													
Making		ms	60...100	60...100	60...100	80...120	80...120	80...120	110...180	110...180	110...180	120...210	300...450
Breaking		ms	25...60	25...60	25...60	30...75	30...75	30...75	60...100	60...100	60...110	70...130	70...130
Life													
Mechanical (million)	AC/DC	cycles	10	10	10	10	10	10	5	5	5	5	5
Electrical (million) (Ie at 400V in AC3)		cycles	1.1	1.1	1	1	0.7	0.7	0.7	0.7	–	–	–
MAXIMUM OPERATING RATE													
Mechanical operations		cy/h	2400	2400	2400	2400	2400	2400	1200	1200	1200	1200	1200
PARTICULAR CHARACTERISTICS													
Indicator			For contactor open or closed status										
Safety feature			Closing operations are prevented without arc chutes										

CONTROL CIRCUIT UTILISATION
The input electronic circuit of the contactor coil B115-B1600 is designed and tested according to IEEEC 62.41 and can withstand a 10 kV impulse voltage (1.2/50μs) with 50 Joule energy.
For higher values, the use of an auxiliary step-down voltage transformer is recommended.

CONTACTORS WITH MECHANICAL LATCH
Contactors B115-B630 type, can have mechanical latch included or can be predisposed, to be completed with mechanical latch, see pages 2-4 and 2-6 (3-pole version) or 2-8 and 2-10 (4-pole version).
Technical data of mechanical latch G495 type is stated on page 2-26.

2

MECHANICAL INTERLOCK BETWEEN CONTACTORS SIDE BY SIDE B115-B630

The G355 type in Fig. 1, can interlock contactors of the same size or of a different one (e.g.: B115 interlocked to B630).

This interlock cannot be used with B1250 or B1600 contactor.
Consult Customer Service (see contact details on inside front cover) to interlock B630 1000 three-pole contactors.

MECHANICAL INTERLOCK BETWEEN CONTACTORS ONE ON TOP OF THE OTHER B115.....B1600... (Fig. 1, 2 and 3)

It is G356... type, which is provided in six types to allow different fixing interaxis of contactors.
Contactors of the same size can be interlocked as well as different sizes.

The tables below indicate the interaxis which can be obtained with the various interlock types; with terminal protections (INTERAXIS A) and without terminal protection (INTERAXIS B).

INTERAXIS A [mm] - For contactors with terminal protection (Fig. 1)

KM1	B115-B145-B180			B250-B310-B400			B500-B630		
KM2	B115 B145 B180	B250 B310 B400	B500 B630	B115 B145 B180	B250 B310 B400	B500 B630	B115 B145 B180	B250 B310 B400	B500 B630
G356 1	–	–	–	–	–	–	–	–	–
G356 2	286...305	–	–	–	–	–	–	–	–
G356 3	305...345	330...345	–	330...345	–	–	–	–	–
G356 4	345...385	345...385	375...385	345...385	372...385	–	375...385	–	–
G356 5	390...425	390...425	390...425	390...425	390...425	420...425	390...425	420...425	–
G356 6	470...500	470...500	470...500	470...500	470...500	470...500	470...500	470...500	470...500

INTERAXIS B [mm] - For contactors without terminal protection (Fig. 2)

KM1	B115-B145-B180			B250-B310-B400			B500-B630		
KM2	B115 B145 B180	B250 B310 B400	B500 B630	B115 B145 B180	B250 B310 B400	B500 B630	B115 B145 B180	B250 B310 B400	B500 B630
G356 1	225...265	–	–	–	–	–	–	–	–
G356 2	265...305	265...305	–	265...305	265...305	–	–	–	–
G356 3	305...345	305...345	305...345	305...345	305...345	305...345	305...345	305...345	–
G356 4	345...385	345...385	345...385	345...385	345...385	345...385	345...385	345...385	345...385
G356 5	390...425	390...425	390...425	390...425	390...425	390...425	390...425	390...425	390...425
G356 6	470...500	470...500	470...500	470...500	470...500	470...500	470...500	470...500	470...500

To interlock two contactors B630 1000, use type G356 6 only.
To interlock two contactors B1250 or B1600, it is imperative to use two pieces of type G356 6 (fig. 3), one fixed on the left side and the other on the right.

Interaxis B is 470-500mm for B630 1000, B1250 or B1600.
The B1250 or B1600 cannot be interlocked with the other types of the B series.

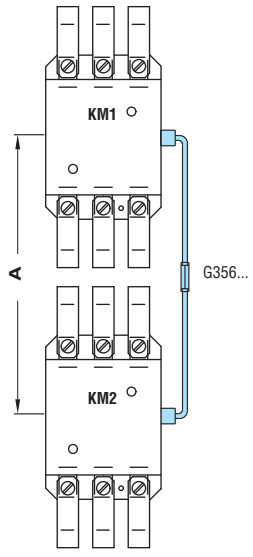

Fig. 1

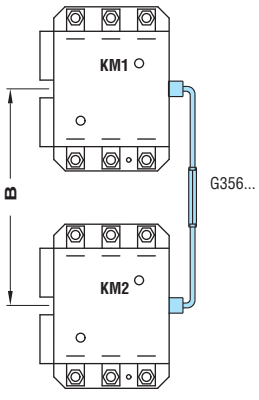

Fig. 2

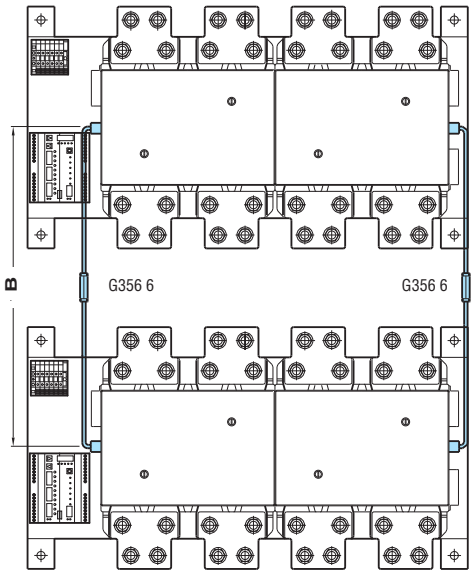

Fig. 3

Horizontal interlock between contactors side by side B115 to B630 1000.
It is G355 type and can interlock both contactors of equal size and contactors of different sizes (e.g. B115 can be interlocked with B630).
For contactor B630 1000 (three-pole), contact our Customer Service office.
This interlock cannot be applied to contactors B1250-B1600.

With mechanical interlock:

– horizontal G355

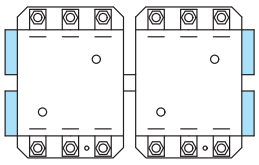

B115-B630

– vertical G356/...

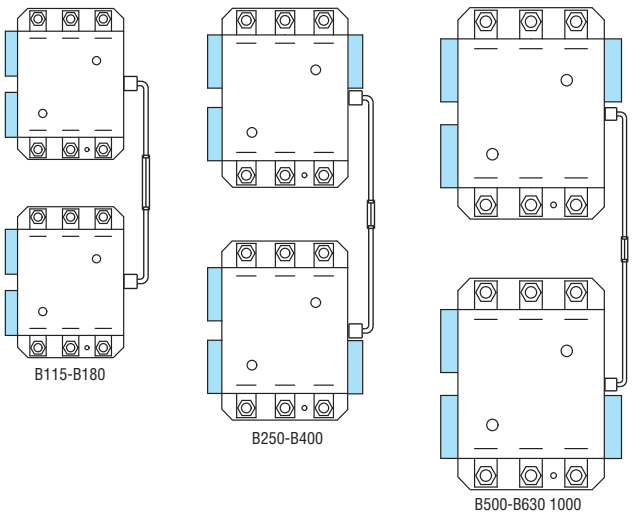

B115-B180

B250-B400

B500-B630 1000

With mechanical interlock:

– horizontal G355

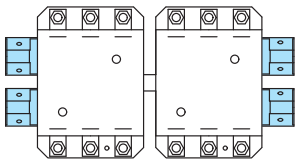

B115-B630

– vertical G356/...

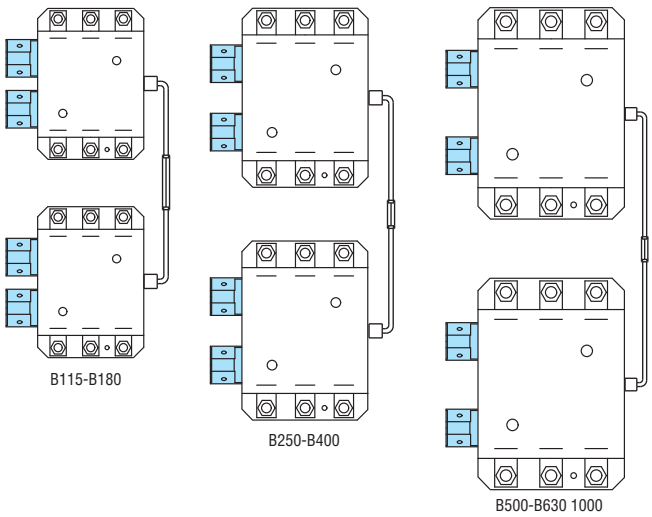

B115-B180

B250-B400

B500-B630 1000