Product datasheet
Characteristics

XCKJ1167H29
limit switch XCKJ - steel roller plunger reinforced - 1C/O - snap action - M20



Main

Range of product	OsiSense XC
Series name	Standard format
Product or component type	Limit switch
Device short name	XCKJ
Sensor design	Form C conforming to CENELEC EN 50041
Body type	Plug-in body
Head type	Plunger head
Material	Metal
Body material	Zamak
Head material	Zamak
Fixing mode	By the body
Movement of operating head	Linear
Type of operator	Spring return roller plunger metal reinforced
Type of approach	Lateral approach, 2 directions
Cable entry	1 entry tapped for M20 x 1.5 cable gland, cable outer diameter: 7…13 mm
Number of poles	1
Contacts type and composition	1 C/O
Contact operation	Snap action

Complementary

Switch actuation	By 30° cam
Electrical connection	Screw-clamp terminals, clamping capacity: 1 x 0.75...2 x 1.5 mm²
Contacts insulation form	Za
Number of steps	1
Positive opening	Without
Minimum force for tripping	16 N

Disclaimer: This documentation is not intended as a substitute for and is not to be used for determining suitability or reliability of these products for specific user applications

Maximum actuation speed	1 m/s
[Ie] rated operational current	3 A at 240 V, AC-15, A300 conforming to EN/IEC 60947-5-1 appendix A 0.27 A at 250 V, DC-13, Q300 conforming to EN/IEC 60947-5-1 appendix A
[Ithe] conventional enclosed thermal current	10 A
[Ui] rated insulation voltage	300 V conforming to UL 508 500 V (pollution degree 3) conforming to IEC 60947-1 300 V conforming to CSA C22.2 No 14
Maximum resistance across terminals	25 MOhm conforming to IEC 60255-7 category 3
[Uimp] rated impulse withstand voltage	IEC 60664 6 kV IEC 60947-1 6 kV
Short-circuit protection	10 A cartridge fuse, type gG
Electrical durability	5000000 cycles, DC-13, inductive load type, 120 V, 4 W, operating rate <60 cyc/mn, load factor: 0.5 conforming to IEC 60947-5-1 appendix C 5000000 cycles, DC-13, inductive load type, 24 V, 10 W, operating rate <60 cyc/mn, load factor: 0.5 conforming to IEC 60947-5-1 appendix C 5000000 cycles, DC-13, inductive load type, 48 V, 7 W, operating rate <60 cyc/mn, load factor: 0.5 conforming to IEC 60947-5-1 appendix C
Mechanical durability	25000000 cycles
Width	43 mm
Height	84 mm
Depth	36 mm
Net weight	0.455 kg
Terminals description ISO n°1	(13-14)NO (11-12)NC

Environment

Shock resistance	50 gn for 11 ms conforming to IEC 60068-2-27
Vibration resistance	25 gn (f= 10…500 Hz) conforming to IEC 60068-2-6
IP degree of protection	IP66 conforming to IEC 60529
IK degree of protection	IK07 conforming to EN 50102
Overvoltage category	Class I conforming to IEC 61140 Class I conforming to NF C 20-030
Ambient air temperature for operation	-25…70 °C
Ambient air temperature for storage	-40…70 °C
Protective treatment	TC
Product certifications	CSA UL CCC
Standards	IEC 60947-5-1 UL 508 EN 60947-5-1 IEC 60204-1 CENELEC EN 50041 EN 60204-1 CSA C22.2 No 14

Packing Units

Package 1 Weight	488 g
Package 2 Weight	10.079 kg

Offer Sustainability

Sustainable offer status	Green Premium product
EU RoHS Directive	Pro-active compliance (Product out of EU RoHS legal scope) EU RoHS Declaration
Mercury free	Yes
RoHS exemption information	Yes
Environmental Disclosure	Product Environmental Profile

Contractual warranty

Warranty	18 months

XCKJ1167H29

Dimensions

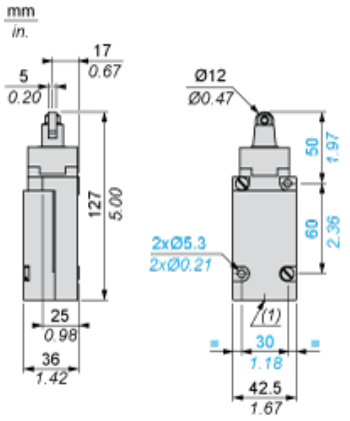

(1) 1 tapped entry M20 x 1.5

Mounting with Cable Entry

Position of Cable Gland

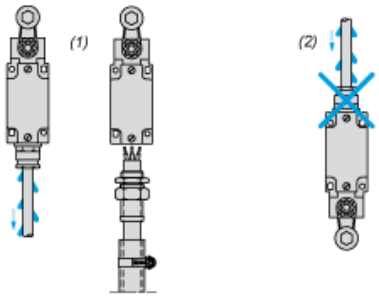

(1) Recommended
(2) To be avoided

Wiring Diagram

Single-pole CO Snap Action

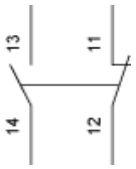

Characteristics of Actuation

Switch Actuation by 30° Cam

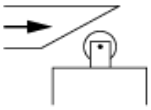

Functionnal Diagram

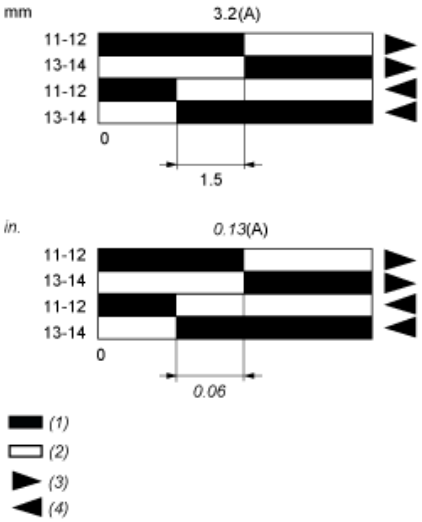

(A) Cam displacement
(1) Closed
(2) Open
(3) Tripping
(4) Resetting