SGS-THOMSON MICROELECTRONICS

M2764A

NMOS 64K (8K x 8) UV EPROM

- FAST ACCESS TIME: 180ns
- EXTENDED TEMPERATURE RANGE
- SINGLE 5V SUPPLY VOLTAGE
- LOW STANDBY CURRENT: 35mA max
- TTL COMPATIBLE DURING READ and PROGRAM
- FAST PROGRAMMING ALGORITHM
- ELECTRONIC SIGNATURE
- PROGRAMMING VOLTAGE: 12V

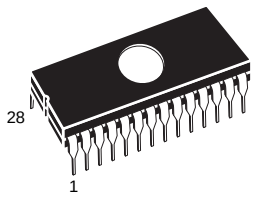

FDIP28W (F)

DESCRIPTION

The M2764A is a 65,536 bit UV erasable and electrically programmable memory EPROM. It is organized as 8,192 words by 8 bits.

The M27C64A is housed in a 28 pin Window Ceramic Frit-Seal Dual-in-Line package. The transparent lid allows the user to expose the chip to ultraviolet light to erase the bit pattern. A new pattern can then be written to the device by following the programming procedure.

Table 1. Signal Names

A0 - A12	Address Inputs
Q0 - Q7	Data Outputs
$\overline{E}$	Chip Enable
$\overline{G}$	Output Enable
$\overline{P}$	Program
V_{PP}	Program Supply
V_{CC}	Supply Voltage
V_{SS}	Ground

Figure 1. Logic Diagram

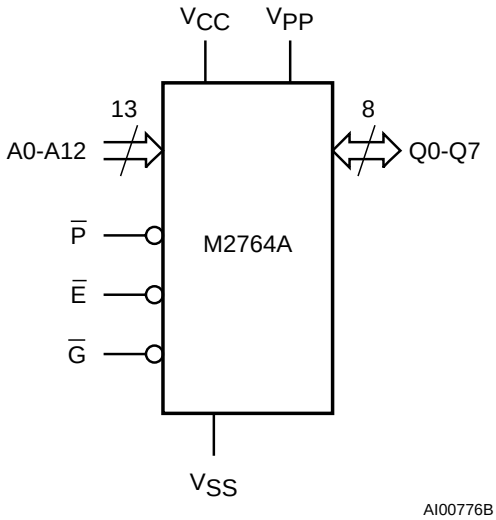

Table 2. Absolute Maximum Ratings

Symbol	Parameter		Value	Unit
T_A	Ambient Operating Temperature	grade 1 grade 6	0 to 70 –40 to 85	°C
T_{BIAS}	Temperature Under Bias	grade 1 grade 6	–10 to 80 –50 to 95	°C
T_{STG}	Storage Temperature		–65 to 125	°C
V_{IO}	Input or Output Voltages		–0.6 to 6.5	V
V_{CC}	Supply Voltage		–0.6 to 6.5	V
V_{A9}	A9 Voltage		–0.6 to 13.5	V
V_{PP}	Program Supply		–0.6 to 14	V

Note: Except for the rating "Operating Temperature Range", stresses above those listed in the Table "Absolute Maximum Ratings" may cause permanent damage to the device. These are stress ratings only and operation of the device at these or any other conditions above those indicated in the Operating sections of this specification is not implied. Exposure to Absolute Maximum Rating conditions for extended periods may affect device reliability. Refer also to the SGS-THOMSON SURE Program and other relevant quality documents.

Figure 2. DIP Pin Connections

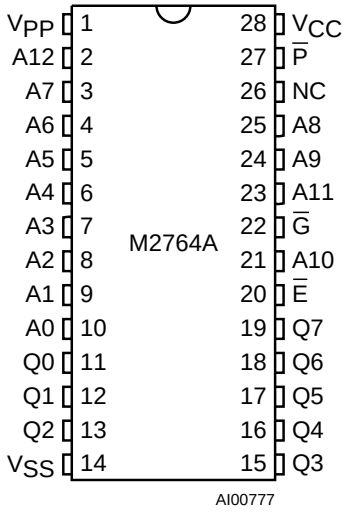

Warning: NC = Not Connected.

DEVICE OPERATION

The seven modes of operations of the M2764A are listed in the Operating Modes table. A single 5V power supply is required in the read mode. All inputs are TTL levels except for V_{PP} and 12V on A9 for Electronic Signature.

Read Mode

The M2764A has two control functions, both of which must be logically satisfied in order to obtain data at the outputs. Chip Enable ($\overline{E}$) is the power control and should be used for device selection. Output Enable ($\overline{G}$) is the output control and should be used to gate data to the output pins, independent of device selection.

Assuming that the addresses are stable, address access time (t_{AVQV}) is equal to the delay from $\overline{E}$ to output (t_{ELQV}). Data is available at the outputs after the falling edge of $\overline{G}$, assuming that $\overline{E}$ has been low and the addresses have been stable for at least t_{AVQV}-t_{GLQV}.

Standby Mode

The M2764A has a standby mode which reduces the maximum active power current from 75mA to 35mA. The M2764A is placed in the standby mode by applying a TTL high signal to the $\overline{E}$ input. When in the standby mode, the outputs are in a high impedance state, independent of the $\overline{G}$ input.

Two Line Output Control

Because EPROMs are usually used in larger memory arrays, the product features a 2 line control function which accommodates the use of multiple memory connection. The two line control function allows :

a. the lowest possible memory power dissipation,

b. complete assurance that output bus contention will not occur.

DEVICE OPERATION (cont'd)

For the most efficient use of these two control lines, $\overline{E}$ should be decoded and used as the primary device selecting function, while $\overline{G}$ should be made a common connection to all devices in the array and connected to the $\overline{READ}$ line from the system control bus.

This ensures that all deselected memory devices are in their low power standby mode and that the output pins are only active when data is desired from a particular memory device.

System Considerations

The power switching characteristics of fast EPROMs require careful decoupling of the devices. The supply current, I_{CC}, has three segments that are of interest to the system designer: the standby current level, the active current level, and transient current peaks that are produced by the falling and rising edges of $\overline{E}$. The magnitude of the transient current peaks is dependent on the capacitive and inductive loading of the device at the output. The associated transient voltage peaks can be suppressed by complying with the two line output control and by properly selected decoupling capacitors. It is recommended that a 1µF ceramic capacitor be used on every device between V_{CC} and V_{SS}. This should be a high frequency capacitor of low inherent inductance and should be placed as close to the device as possible. In addition, a 4.7µF bulk electrolytic capacitor should be used between V_{CC} and V_{SS} for every eight devices. The bulk capacitor should be located near the power supply connection point. The purpose of the bulk capacitor is to overcome the voltage drop caused by the inductive effects of PCB traces.

Programming

When delivered (and after each erasure for UV EPROM), all bits of the M2764A are in the "1" state. Data is introduced by selectively programming "0s" into the desired bit locations. Although only "0s" will be programmed, both "1s" and "0s" can be present in the data word. The only way to change a "0" to a "1" is by ultraviolet light erasure.

The M2764A is in the programming mode when V_{PP} input is at 12.5V and $\overline{E}$ and $\overline{P}$ are at TTL low. The data to be programmed is applied, 8 bits in parallel, to the data output pins. The levels required for the address and data inputs are TTL.

Fast Programming Algorithm

Fast Programming Algorithm rapidly programs M2764A EPROMs using an efficient and reliable method suited to the production programming environment. Programming reliability is also ensured as the incremental program margin of each byte is continually monitored to determine when it has

Table 3. Operating Modes

Mode	$\overline{E}$	$\overline{G}$	$\overline{P}$	A9	V_{PP}	Q0 - Q7
Read	V_{IL}	V_{IL}	V_{IH}	X	V_{CC}	Data Out
Output Disable	V_{IL}	V_{IH}	V_{IH}	X	V_{CC}	Hi-Z
Program	V_{IL}	V_{IH}	V_{IL} Pulse	X	V_{PP}	Data In
Verify	V_{IL}	V_{IL}	V_{IH}	X	V_{PP}	Data Out
Program Inhibit	V_{IH}	X	X	X	V_{PP}	Hi-Z
Standby	V_{IH}	X	X	X	V_{CC}	Hi-Z
Electronic Signature	V_{IL}	V_{IL}	V_{IH}	V_{ID}	V_{CC}	Codes Out

Note: X = V_{IH} or V_{IL}, V_{ID} = 12V ± 0.5%.

Table 4. Electronic Signature

Identifier	A0	Q7	Q6	Q5	Q4	Q3	Q2	Q1	Q0	Hex Data
Manufacturer's Code	V_{IL}	0	0	1	0	0	0	0	0	20h
Device Code	V_{IH}	0	0	0	0	1	0	0	0	08h

AC MEASUREMENT CONDITIONS

Input Rise and Fall Times	≤ 20ns
Input Pulse Voltages	0.45V to 2.4V
Input and Output Timing Ref. Voltages	0.8V to 2.0V

Note that Output Hi-Z is defined as the point where data is no longer driven.

Figure 3. AC Testing Input Output Waveforms

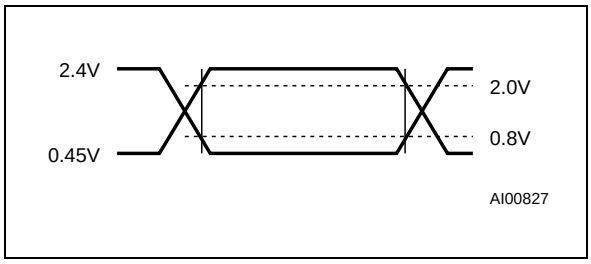

Figure 4. AC Testing Load Circuit

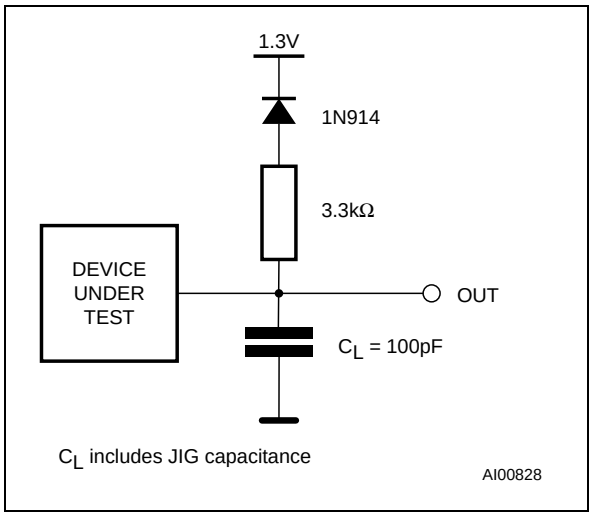

Table 5. Capacitance (1) (T_A = 25 °C, f = 1 MHz)

Symbol	Parameter	Test Condition	Min	Max	Unit
C_{IN}	Input Capacitance	V_{IN} = 0V		6	pF
C_{OUT}	Output Capacitance	V_{OUT} = 0V		12	pF

Note: 1. Sampled only, not 100% tested.

Figure 5. Read Mode AC Waveforms

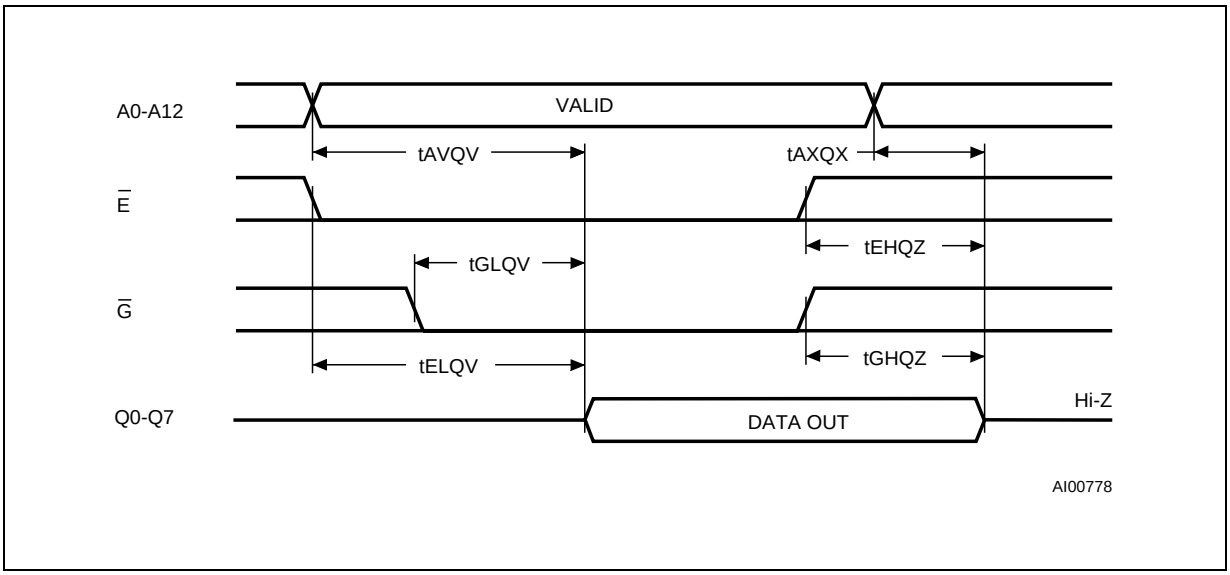

Table 6. Read Mode DC Characteristics (1)
(T_A = 0 to 70 °C or –40 to 85 °C; V_{CC} = 5V ± 5% or 5V ± 10%; V_{PP} = V_{CC})

Symbol	Parameter	Test Condition	Min	Max	Unit
I_{LI}	Input Leakage Current	$0 \le V_{IN} \le V_{CC}$		±10	µA
I_{LO}	Output Leakage Current	$V_{OUT} = V_{CC}$		±10	µA
I_{CC}	Supply Current	$\overline{E} = V_{IL}$, $\overline{G} = V_{IL}$		75	mA
I_{CC1}	Supply Current (Standby)	$\overline{E} = V_{IH}$		35	mA
I_{PP}	Program Current	$V_{PP} = V_{CC}$		5	mA
V_{IL}	Input Low Voltage		–0.1	0.8	V
V_{IH}	Input High Voltage		2	V_{CC} + 1	V
V_{OL}	Output Low Voltage	I_{OL} = 2.1mA		0.45	V
V_{OH}	Output High Voltage	I_{OH} = –400µA	2.4		V

Note: 1. V_{CC} must be applied simultaneously with or before V_{PP} and removed simultaneously or after V_{PP}.

Table 7A. Read Mode AC Characteristics (1)
(T_A = 0 to 70 °C or –40 to 85 °C; V_{CC} = 5V ± 5% or 5V ± 10%; V_{PP} = V_{CC})

Symbol	Alt	Parameter	Test Condition	M2764A						Unit
				-1		-2, -20		blank, -25		
				Min	Max	Min	Max	Min	Max	
t_{AVQV}	t_{ACC}	Address Valid to Output Valid	$\overline{E}$ = V_{IL}, $\overline{G}$ = V_{IL}		180		200		250	ns
t_{ELQV}	t_{CE}	Chip Enable Low to Output Valid	$\overline{G} = V_{IL}$		180		200		250	ns
t_{GLQV}	t_{OE}	Output Enable Low to Output Valid	$\overline{E} = V_{IL}$		65		75		100	ns
t_{EHQZ} (2)	t_{DF}	Chip Enable High to Output Hi-Z	$\overline{G} = V_{IL}$	0	55	0	55	0	60	ns
t_{GHQZ} (2)	t_{DF}	Output Enable High to Output Hi-Z	$\overline{E} = V_{IL}$	0	55	0	55	0	60	ns
t_{AXQX}	t_{OH}	Address Transition to Output Transition	$\overline{E}$ = V_{IL}, $\overline{G}$ = V_{IL}	0		0		0		ns

Table 7B. Read Mode AC Characteristics (1)
(T_A = 0 to 70 °C or –40 to 85 °C; V_{CC} = 5V ± 5% or 5V ± 10%; V_{PP} = V_{CC})

Symbol	Alt	Parameter	Test Condition	M2764A				Unit
				-3		-4		
				Min	Max	Min	Max	
t_{AVQV}	t_{ACC}	Address Valid to Output Valid	$\overline{E}$ = V_{IL}, $\overline{G}$ = V_{IL}		300		450	ns
t_{ELQV}	t_{CE}	Chip Enable Low to Output Valid	$\overline{G} = V_{IL}$		300		450	ns
t_{GLQV}	t_{OE}	Output Enable Low to Output Valid	$\overline{E} = V_{IL}$,		120		150	ns
t_{EHQZ} (2)	t_{DF}	Chip Enable High to Output Hi-Z	$\overline{G} = V_{IL}$	0	105	0	130	ns
t_{GHQZ} (2)	t_{DF}	Output Enable High to Output Hi-Z	$\overline{E} = V_{IL}$	0	105	0	130	ns
t_{AXQX}	t_{OH}	Address Transition to Output Transition	$\overline{E}$ = V_{IL}, $\overline{G}$ = V_{IL}	0		0		ns

Notes: 1. V_{CC} must be applied simultaneously with or before V_{PP} and removed simultaneously or after V_{PP}.
2. Sampled only, not 100% tested.

Table 8. Programming Mode DC Characteristics (1)
(T_A = 25 °C; V_{CC} = 6V ± 0.25V; V_{PP} = 12.5V ± 0.3V)

Symbol	Parameter	Test Condition	Min	Max	Units
I_{LI}	Input Leakage Current	$V_{IL} \le V_{IN} \le V_{IH}$		±10	µA
I_{CC}	Supply Current			75	mA
I_{PP}	Program Current	$\overline{E} = V_{IL}$		50	mA
V_{IL}	Input Low Voltage		–0.1	0.8	V
V_{IH}	Input High Voltage		2	V_{CC} + 1	V
V_{OL}	Output Low Voltage	I_{OL} = 2.1mA		0.45	V
V_{OH}	Output High Voltage	I_{OH} = –400µA	2.4		V
VA9	A9 Voltage		11.5	12.5	V

Note: 1. V_{CC} must be applied simultaneously with or before V_{PP} and removed simultaneously or after V_{PP}.

Table 9. Programming Mode AC Characteristics (1)
(T_A = 25 °C; V_{CC} = 6V ± 0.25V; V_{PP} = 12.5V ± 0.3V)

Symbol	Alt	Parameter	Test Condition	Min	Max	Units
t_{AVPL}	t_{AS}	Address Valid to Program Low		2		µs
t_{QVPL}	t_{DS}	Input Valid to Program Low		2		µs
t_{VPHPL}	t_{VPS}	V_{PP} High to Program Low		2		µs
t_{VCHPL}	t_{VCS}	V_{CC} High to Program Low		2		µs
t_{ELPL}	t_{CES}	Chip Enable Low to Program Low		2		µs
t_{PLPH}	t_{PW}	Program Pulse Width (Initial)	Note 2	0.95	1.05	ms
t_{PLPH}	t_{OPW}	Program Pulse Width (Overprogram)	Note 3	2.85	78.75	ms
t_{PHQX}	t_{DH}	Program High to Input Transition		2		µs
t_{QXGL}	t_{OES}	Input Transition to Output Enable Low		2		µs
t_{GLQV}	t_{OE}	Output Enable Low to Output Valid			150	ns
t_{GHQZ} (4)	t_{DFP}	Output Enable High to Output Hi-Z		0	130	ns
t_{GHAX}	t_{AH}	Output Enable High to Address Transition		0		ns

Notes: 1. V_{CC} must be applied simultaneously with or before V_{PP} and removed simultaneously or after V_{PP}.
2. The Initial Program Pulse width tolerance is 1 ms ± 5%.
3. The length of the Over-program Pulse varies from 2.85 ms to 78.95 ms, depending of the multiplication value of the iteration counter.
4. Sampled only, not 100% tested.

Figure 6. Programming and Verify Modes AC Waveforms

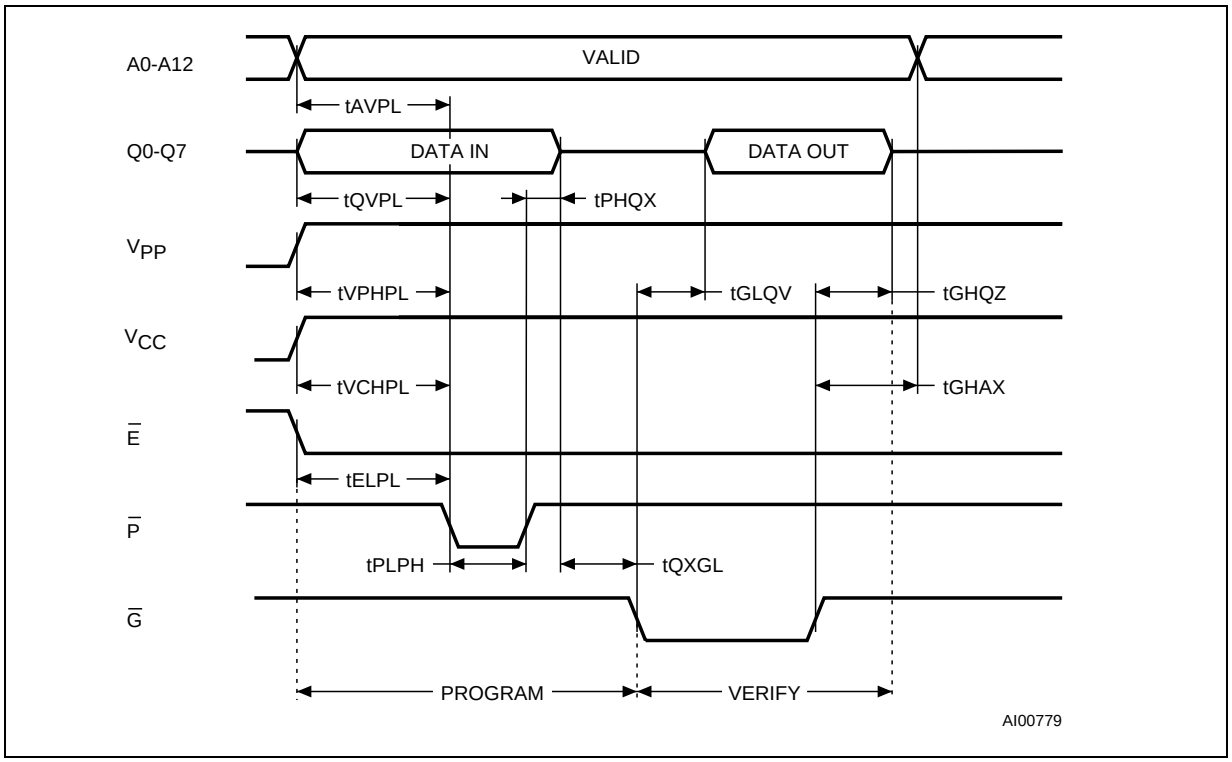

Figure 7. Fast Programming Flowchart

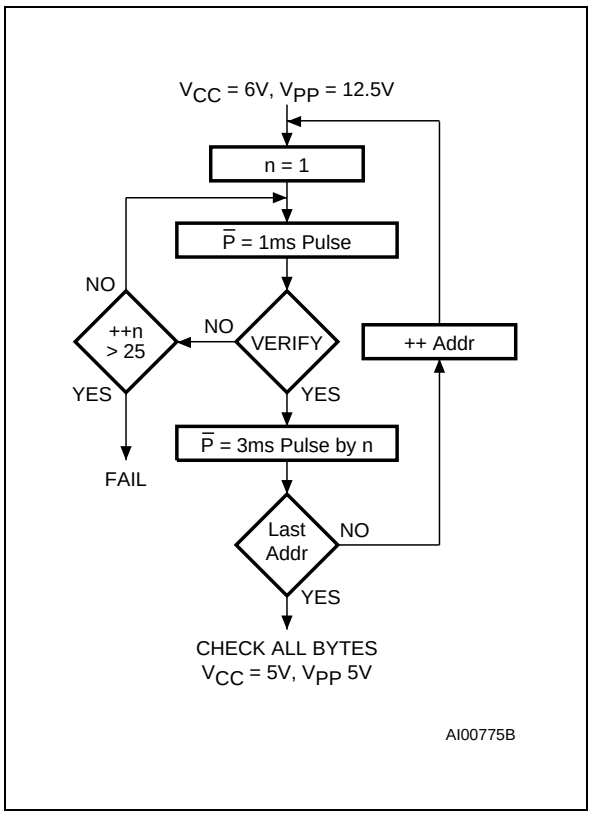

DEVICE OPERATION (cont'd)

been successfully programmed. A flowchart of the M2764A Fast Programming Algorithm is shown on the last page. The Fast Programming Algorithm utilizes two different pulse types: initial and over-program.

The duration of the initial $\overline{P}$ pulse(s) is 1ms, which will then be followed by a longer overprogram pulse of length 3ms by n (n is equal to the number of the initial one millisecond pulses applied to a particular M2764A location), before a correct verify occurs. Up to 25 one-millisecond pulses per byte are provided for before the overprogram pulse is applied.

The entire sequence of program pulses and byte verifications is performed at V_{CC} = 6V and V_{PP} = 12.5V. When the Fast Programming cycle has been completed, all bytes should be compared to the original data with V_{CC} = 5V and V_{PP} = 5V.

Program Inhibit

Programming of multiple M2764A in parallel with different data is also easily accomplished. Except for $\overline{E}$, all like inputs (including $\overline{G}$) of the parallel M2764A may be common. A TTL low pulse applied to a M2764A's $\overline{E}$ input, with V_{PP} at 12.5V, will program that M2764A. A high level $\overline{E}$ input inhibits the other M2764As from being programmed.

Program Verify

A verify should be performed on the programmed bits to determine that they were correctly programmed. The verify is accomplished with $\overline{G} = V_{IL}$, $\overline{E} = V_{IL}$, $\overline{P} = V_{IH}$ and $V_{PP} = 12.5V$.

Electronic Signature

The Electronic Signature mode allows the reading out of a binary code from an EPROM that will identify its manufacturer and type. This mode is intended for use by programming equipment to automatically match the device to be programmed with its corresponding programming algorithm. This mode is functional in the 25°C ± 5°C ambient temperature range that is required when programming the M2764A.

To activate this mode, the programming equipment must force 11.5V to 12.5V on address line A9 of the M2764A. Two identifier bytes may then be sequenced from the device outputs by toggling address line A0 from V_{IL} to V_{IH}. All other address lines must be held at V_{IL} during Electronic Signature mode. Byte 0 (A0 = V_{IL}) represents the manufacturer code and byte 1 (A0 = V_{IH}) the device identifier code. For the SGS-THOMSON M2764A, these two identifier bytes are given below.

ERASURE OPERATION (applies to UV EPPROM)

The erasure characteristic of the M2764A is such that erasure begins when the cells are exposed to light with wavelengths shorter than approximately 4000 Å. It should be noted that sunlight and some type of fluorescent lamps have wavelengths in the 3000-4000 Å range. Research shows that constant exposure to room level fluorescent lighting could erase a typical M2764A in about 3 years, while it would take approximately 1 week to cause erasure when exposed to direct sunlight. If the M2764A is to be exposed to these types of lighting conditions for extended periods of time, it is suggested that opaque labels be put over the M2764A window to prevent unintentional erasure. The recommended erasure procedure for the M2764A is exposure to short wave ultraviolet light which has wavelength 2537 Å. The integrated dose (i.e. UV intensity x exposure time) for erasure should be a minimum of 15 W-sec/cm^2. The erasure time with this dosage is approximately 15 to 20 minutes using an ultraviolet lamp with 12000 µW/cm^2 power rating. The M2764A should be placed within 2.5 cm (1 inch) of the lamp tubes during the erasure. Some lamps have a filter on their tubes which should be removed before erasure.

ORDERING INFORMATION SCHEME

Example: M2764A -1 F 1

Speed and V_{CC} Tolerance		Package		Temperature Range	
-1	180 ns, 5V ±5%	F	FDIP28W	1	0 to 70 °
-2	200 ns, 5V ±5%			6	–40 to 85 °C
blank	250 ns, 5V ±5%				
-3	300 ns, 5V ±5%				
-4	450 ns, 5V ±5%				
-20	200 ns, 5V ±10%				
-25	250 ns, 5V ±10%				

For a list of available options (Speed, V_{CC} Tolerance, Package, etc...) refer to the current Memory Shortform catalogue.

For further information on any aspect of this device, please contact SGS-THOMSON Sales Office nearest to you.

FDIP28W - 28 pin Ceramic Frit-seal DIP, with window

Symb	mm			inches		
	Typ	Min	Max	Typ	Min	Max
A			5.71			0.225
A1		0.50	1.78		0.020	0.070
A2		3.90	5.08		0.154	0.200
B		0.40	0.55		0.016	0.022
B1		1.17	1.42		0.046	0.056
C		0.22	0.31		0.009	0.012
D			38.10			1.500
E		15.40	15.80		0.606	0.622
E1		13.05	13.36		0.514	0.526
e1	2.54	–	–	0.100	–	–
e3	33.02	–	–	1.300	–	–
eA		16.17	18.32		0.637	0.721
L		3.18	4.10		0.125	0.161
S		1.52	2.49		0.060	0.098
∅	7.11	–	–	0.280	–	–
α		4°	15°		4°	15°
N	28			28		

FDIP28W

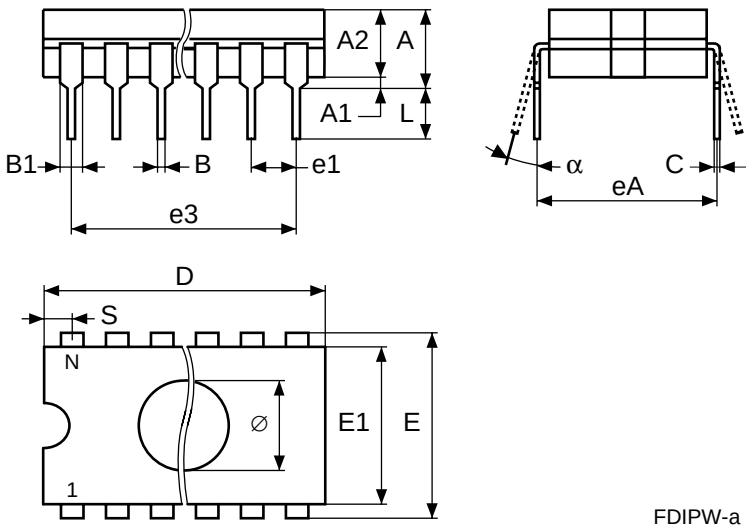

FDIPW-a

Drawing is not to scale