Using Safety Rope Switches: **Guardian Line Series**

RELIABLE CONNECTIVITY:

Tensioning of the rope is achieved by the use of IDEM's new patented Tensioner/Gripper accessory.

Traditional turnbuckle and clamp systems are difficult to tension and adjust and frequent re-tensioning or maintenance is normally required of either the turnbuckle or the clamps. Traditional tensioning systems make viewing of the switch tension window difficult.

For greater reliability and ease of installation the Tensioner/Gripper accessory significantly reduces the installation time by offering an eyehook and tensioner thimble and high strength gripper in one assembly to enable rapid connection to the switch eyebolts and fast and accurate tensioning of the Rope. By being in close proximity to the viewing window of the switch systems can be easily tensioned accurately and quickly. The double clamp mechanism prevents rope slippage and significantly reduces machine downtime which can occur with traditional turnbuckle systems.

TENSIONER/GRIPPER SYSTEM:

The end of the safety rope is fed through a central hole in a cone shaped guide which protrudes from the main housing.

After being fed through the guide hole the rope enters the main housing by going through a feed hole and then is looped back through 180 degrees and is fed through a second feed hole on the opposite side of the mechanism.

The rope is then pulled for maximum tension and is locked in position by a locking bar inside the main housing which is moved by turning an Allen type locking bolt.

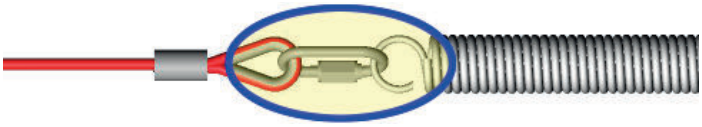

For systems up to 50m a Quick Link termination is provided for easy connection to either a Safety Spring or Switch eyebolt.
(Note: For systems above 50m a Tensioner/Gripper is required for each side).

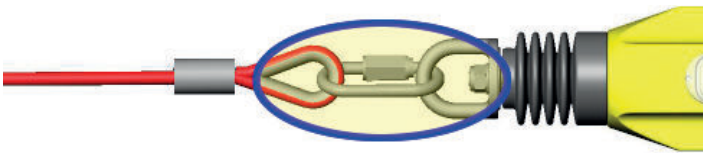

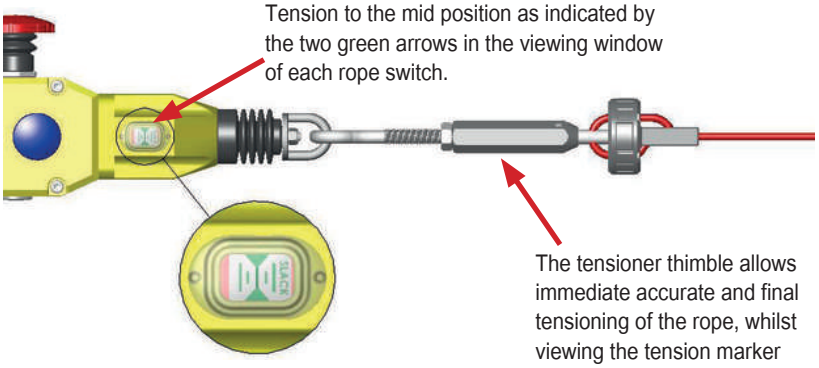

Tension to the mid position as indicated by the two green arrows in the viewing window of each rope switch.

The tensioner thimble allows immediate accurate and final tensioning of the rope, whilst viewing the tension marker through the viewing window on the rope switch.

Patented Design
Withstands 1500N force

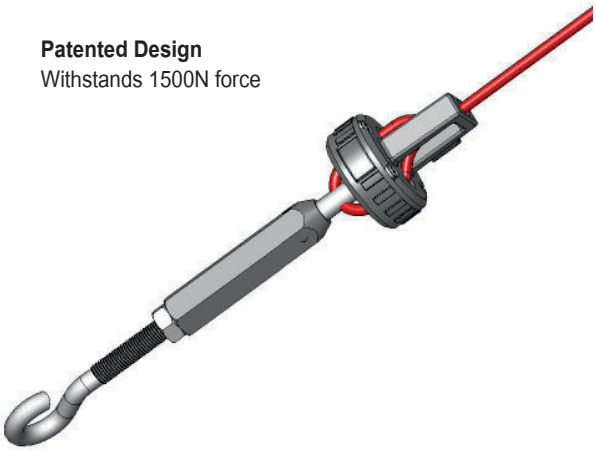

UNIVERSAL PULLEY:



Universal Pulley
Can be used on inside and outside corners.
Stainless Steel.

NAVIGATING CORNERS:

Because of the added friction on the eyebolts and rope when navigating corners, IDEM's unique "universal" pulley can be used to navigate inside or outside corners without causing damage to the rope. They are manufactured in Stainless Steel and can be rigidly mounted.

Examples of using the Universal Pulley:

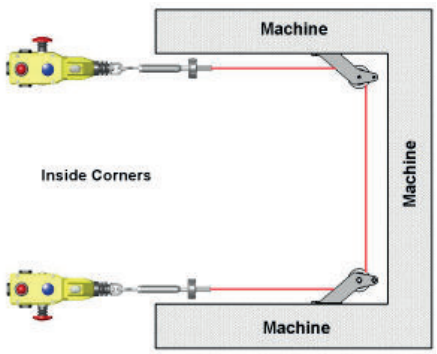

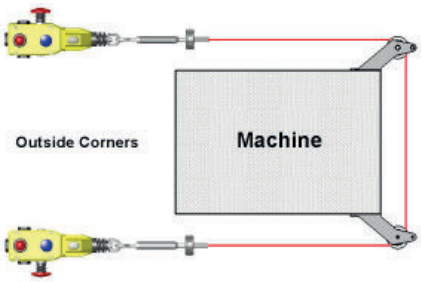

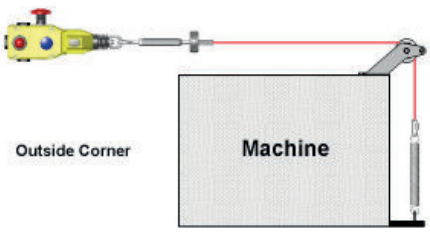

WIRING DIAGRAM FOR LED:

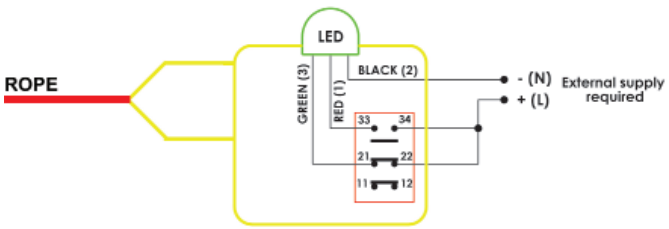

Using Safety Rope Switches: **Guardian Line Series**

FLEXIBLE ROLLER EYEBOLT WITH ADJUSTMENT APPLICATION:

When using rope pull switch systems on conveyors the rope is supported along the conveyor length by equally spaced eyebolts.

Traditional eyebolts are made from solid metal and offer an eyelet to support the rope and provide a catenary between eyebolts to deflect the rope during pulling. On long conveyors eyebolt mounting positions can vary along the length of the conveyor and therefore mis-alignment of the eyebolts along the conveyor can cause a friction problem making the systems difficult to operate.

After operation the rope system, the rope may not be able to move (due to the friction) and allow the switch mechanism to be reset.

Ultimately the rope can be damaged or wear to breaking point.

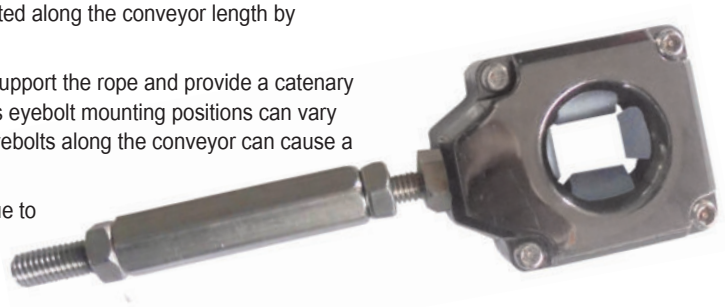

PROPERTIES & FEATURES:

Adjustable mounting positions provides mounting flexibility in adjustment in two planes. This better copes with uneven positioning of eyebolts over the length of the conveyor or conveyors with radius profiles.

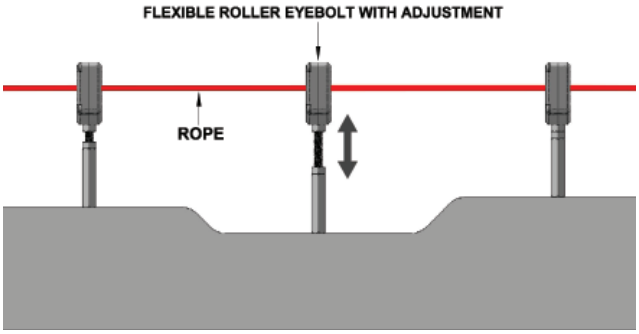

Moveable rollers within the eyebolt structure to ensure no loss of movement due to friction when pulled in any direction.

The position of the rollers allow contact with the rope through 360 degrees within the eyelet of the eyebolt.

Friction is eliminated due to the fact that at any point of contact between the rope and a roller there is rotational movement.

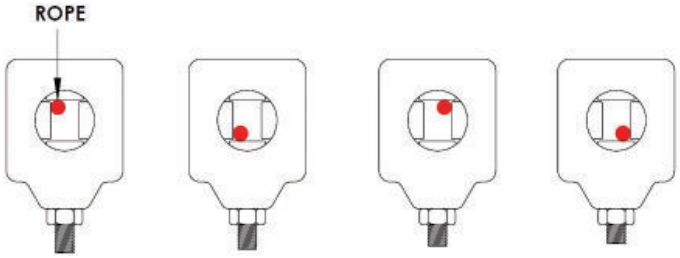

The eyebolt position relative to the mounting frame of the conveyor can be adjusted in length away from the conveyor mounting frame by turning an integral adjustable threaded thimble. The eyebolt head can be rotated to provide further adjustment depending upon the direction of the rope along the conveyor length. The final position of the head can be fixed by the locknut or left free to rotate during use.

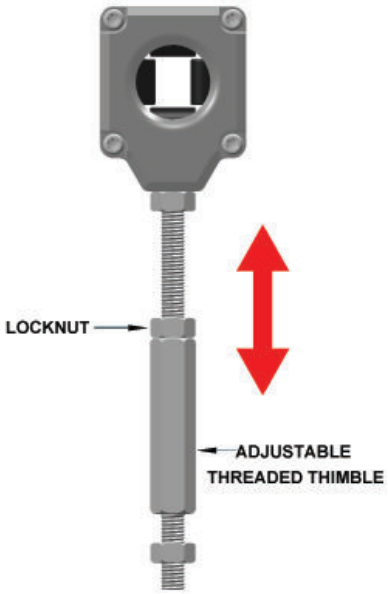



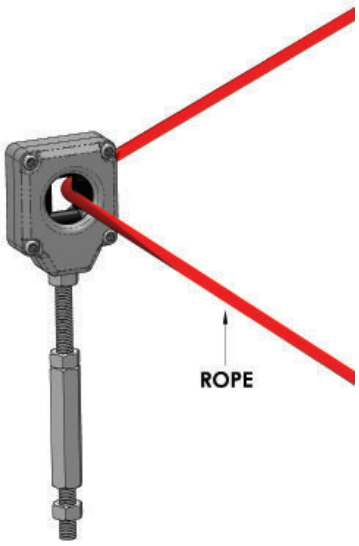

FLEXIBLE ROLLER EYEBOLT WITH ADJUSTMENT

ORDERING:

Thimble, nuts and bolt are manufactured in stainless steel.
Housing is manufactured in mirror polished die cast metal.
Rollers are manufactured from plastic

SALES NUMBER	ITEM
140048	Flexible Roller Eyebolt with Adjustment
140099	Flexible Roller Eyebolt with Nuts - No Adjustment



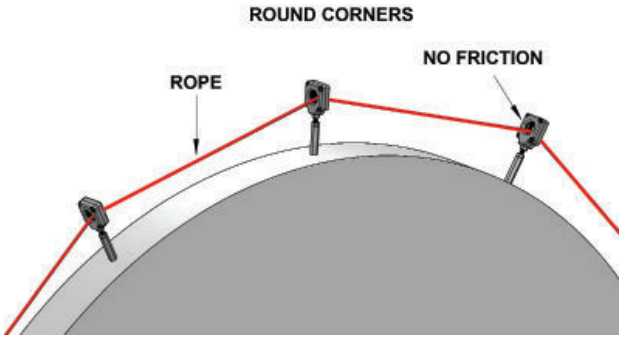

Using Safety Rope Switches: **Guardian Line Series**

GUARDIAN LINE CONNECTIVITY ACCESSORIES (see p175) DIMENSIONS:

TENSIONER/GRIPPER SYSTEM

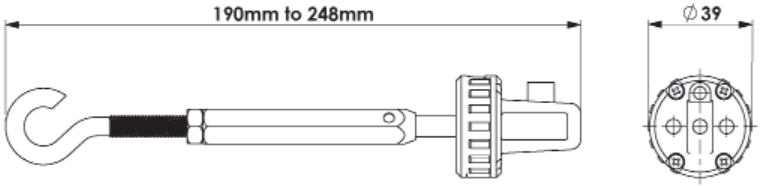

SALES NUMBER	ITEM	MATERIAL
140019	Rope Tensioner Gripper	Stainless Steel
140020	Rope Tensioner Gripper	Galvanised Steel

UNIVERSAL PULLEY

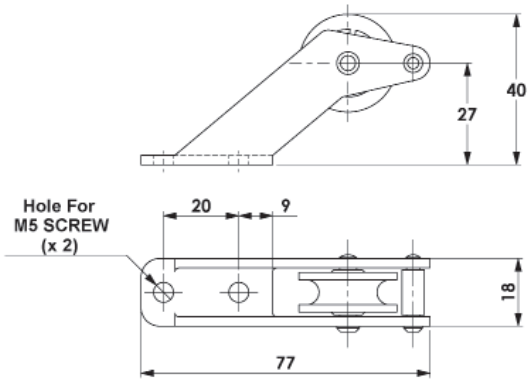

SALES NUMBER	ITEM	MATERIAL
140021	Universal Pulley	Stainless Steel
140064	Universal Pulley	Galvanised

STAINLESS STEEL SAFETY SPRING

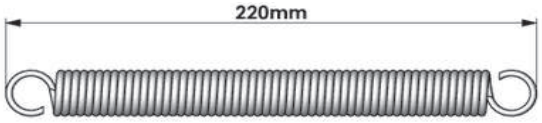

SALES NUMBER	ITEM	MATERIAL
143043	220mm Long Safety Spring	Stainless Steel

FLEXIBLE ROLLER EYEBOLT WITH ADJUSTMENT

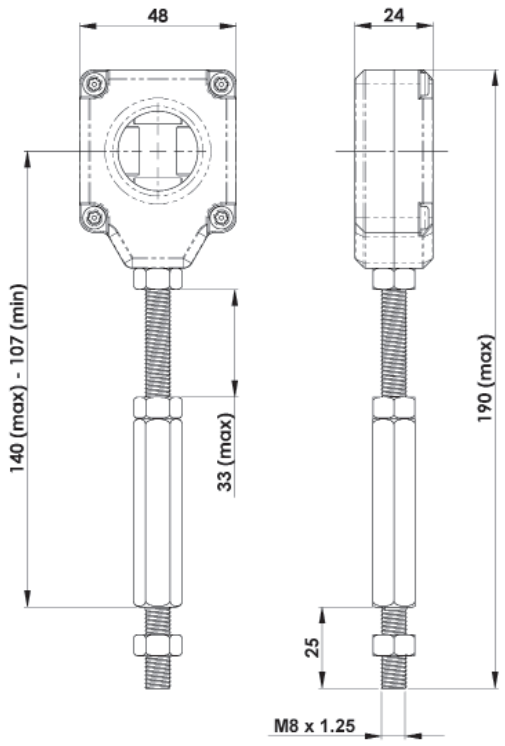

SALES NUMBER	ITEM
140048	Flexible Roller Eyebolt with Adjustment

FLEXIBLE ROLLER EYEBOLT WITH NUTS NO ADJUSTMENT

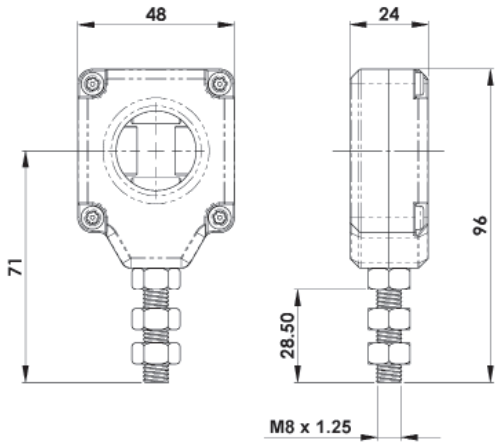

SALES NUMBER	ITEM
140099	Flexible Roller Eyebolt with Nuts - No Adjustment

STANDARD EYEBOLT 84mm LONG

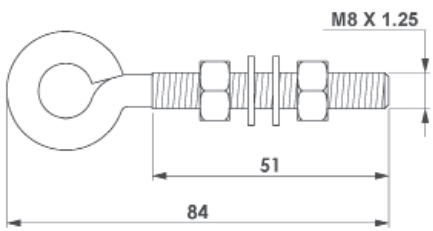

SALES NUMBER	ITEM	MATERIAL
140045	Eyebolt (8 Pack) 84mm Long	Stainless Steel
140046	Eyebolt (8 Pack) 84mm Long	Galvanised

STANDARD EYEBOLT 130mm LONG

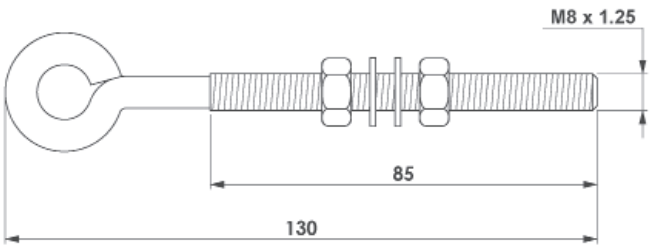

SALES NUMBER	ITEM	MATERIAL
140126	Eyebolt (8 Pack) 130mm Long	Stainless Steel
140127	Eyebolt (8 Pack) 130mm Long	Galvanised

Guardian Line Rope Switches: **Accessories**

SALES NUMBER GALVANISED	SALES NUMBER STAINLESS STEEL	DESCRIPTION	ROPE	EYEBOLTS 84mm LONG	TENSIONER/ GRIPPER	ALLEN KEY
140001	140010	5M Rope Kit	5M QL	3	1	1
140002	140011	10M Rope Kit	10M QL	5	1	1
140003	140012	15M Rope Kit	15M QL	7	1	1
140004	140013	20M Rope Kit	20M QL	9	1	1
140005	140014	30M Rope Kit	30M QL	12	1	1
140006	140015	50M Rope Kit	50M QL	20	1	1
140007	140016	80M Rope Kit	80M	30	2	2
140008	140017	100M Rope Kit	100M	37	2	2
140009	140018	126M Rope Kit	126M	45	2	2
140033		Rope only 5M				
140034		Rope only 10M				
140036		Rope only 20M				
140037		Rope only 30M				
140038		Rope only 50M				
140039		Rope only 80M				
140040		Rope only 100M				
140041		Rope only 126M				
140068		Rope only 500M Drum				
140019		Rope Tensioner/Gripper Stainless Steel				
140020		Rope Tensioner/Gripper Galvanised Steel				
140021		77mm Long 40mm High Fixing Hole Centres 20mm Universal Pulley (for Inside and Outside Corners) Stainless Steel				
140064		Universal Pulley (for Inside and Outside Corners) Galvanised				
140045		Eyebolt Stainless Steel (8 Pack) 84mm Long Thread Length 51mm M8 x 1.25				
140046		Eyebolt Galvanised (8 Pack) 84mm Long Thread Length 51mm M8 x 1.25				
140126		Eyebolt Stainless Steel (8 Pack) 130mm Long Thread Length 85mm M8 x 1.25				
140127		Eyebolt Galvanised (8 Pack) 130mm Long Thread Length 85mm M8 x 1.25				
140047-Long		Pigtail Eyebolt Stainless Steel (8 Pack) 154mm Long Thread Length 66mm M10 x 1.5				
140047-Short		Pigtail Eyebolt Stainless Steel (8 Pack) 114mm Long Thread Length 46mm M10 x 1.5				
140048		Flexible Roller Eyebolt with Adjustment				
140099		Flexible Roller Eyebolt with Nuts - no adjustment				
Standard Bezel	S/Steel Bezel					
140042-A	140042-A-SS	LED Green/Flashing Red 24Vdc				
140042-B	140042-B-SS	LED Green/Flashing Red 110-120Vac				
140042-C	140042-C-SS	LED Green/Flashing Red 230Vac				
140132-AS	140132-AS-SS	LED Steady Green/Steady Red 24Vdc				
140132-BS	140132-BS-SS	LED Steady Green/Steady Red 110-120Vac				
140132-CS	140132-CS-SS	LED Steady Green/Steady Red 230Vac				
140043		220mm Long Safety Spring Stainless Steel				
140140		E-Stop Mechanism Stainless Steel				
140044		E-Stop Mechanism				
140059		Screwdriver Anti-Tamper T20				

NOTE: Rope Kits eyebolts 84mm long.



Tensioner/Gripper Assembly
Allen Key 4mm
Quick Link (QL)
For up to 50m spans - 1 rope end is terminated with a thimble and permanent clamp.
For over 50m spans - 2 Tensioner/Gripper Assemblies are supplied (no Quick Link).



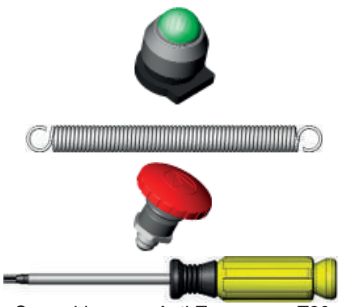

Screwdriver Anti-Tamper T20

ACCESSORIES - MOUNTING BRACKET STAINLESS STEEL:

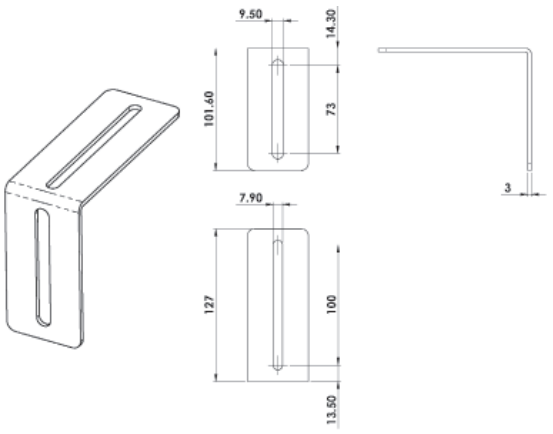

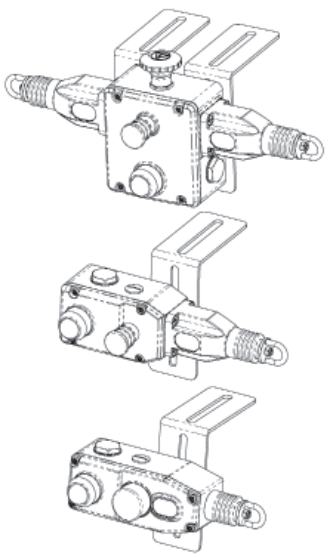

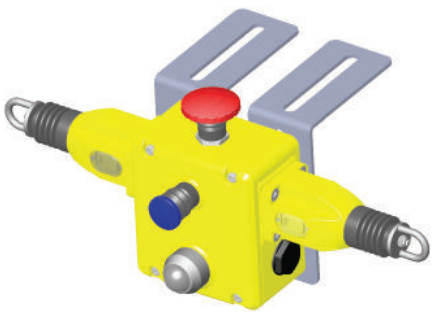

MOUNTING BRACKET FOR ROPE SWITCHES ALL VARIATIONS	SALES NUMBER
Stainless Steel	140165