MALE END VIEW	FEMALE END VIEW
(LONG) 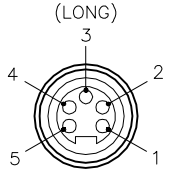 	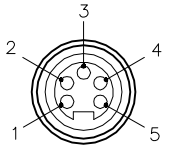
1 = BLACK 2 = BLUE 3 = GREEN/YELLOW 4 = BROWN 5 = WHITE	1 = BLACK 2 = BLUE 3 = GREEN/YELLOW 4 = BROWN 5 = WHITE
mini fast.	mini fast.

SPECIFICATIONS	
CONTACT CARRIER MATERIAL	TPU
MOLDED HEAD MATERIAL/COLOR	TPU/YELLOW
CONTACT MATERIAL/PLATING	BRASS/GOLD
COUPLING NUT MATERIAL/PLATING	BRASS/NICKEL
RATED CURRENT [A]	9.0 A
RATED VOLTAGE [V]	600 V
OUTER JACKET MATERIAL/COLOR	PVC/YELLOW
CONDUCTOR INSULATION MATERIAL	PVC
NUMBER OF CONDUCTORS [AWG]	5x18 AWG
TEMPERATURE RANGE	−40°C to +105°C (−40°F to +221°F)
PROTECTION CLASS	NEMA 1,3,4,6P,12 & IECIP67, IP68,IP69,IP69K

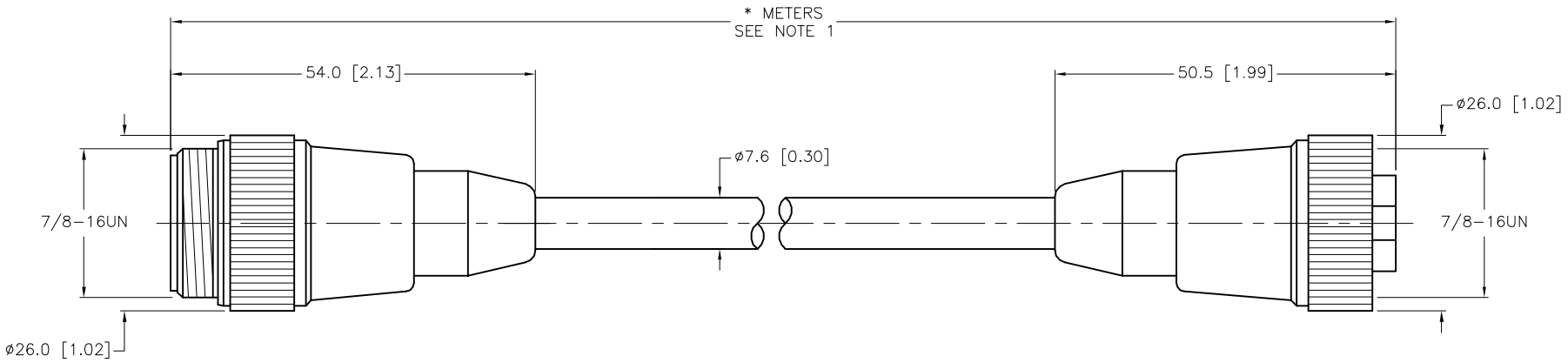

CABLE LENGTH	TOLERANCE*
ALL LENGTHS	+ 4% (OR 50mm) OF LENGTH − 0% (OR 0mm) OF LENGTH WHICHEVER IS GREATER
STRIP LENGTH	**TOLERANCE***
0−7mm	±0.5mm
8−29mm	±1.0mm
30−49mm	±2.0mm
50−69mm	±3.0mm
70−100mm	±4.0mm
OVER 100mm	±5.0mm
* UNLESS OTHERWISE SPECIFIED	

SOURCE DRAWING - FOR REFERENCE ONLY

NOTES:

1. "*" INDICATES CABLE LENGTH IN METERS. CONTACT TURCK TO ORDER SPECIFIC LENGTHS.

REV	DESCRIPTION	BY	DATE	ECO NO.
F	UPDATE PROTECTION CLASS	CBM	04/13/21	76628

RELATED DOCUMENTS
1.
2.
3.
4.

MATERIAL

FINISH

3RD ANGLE PROJECTION

ALL DIMENSIONS DISPLAYED ON THIS DRAWING ARE FOR REFERENCE ONLY

CONTACT TURCK FOR MORE INFORMATION

THIS DRAWING IS CONFIDENTIAL AND THE PROPERTY OF TURCK INC. USE OF THIS DOCUMENT WITHOUT WRITTEN PERMISSION IS PROHIBITED.

TURCK
3000 CAMPUS DRIVE
MINNEAPOLIS, MN 55441
1−800−544−7769
(763) 553−7300
(763) 553−0708 fax
www.turck.us

DRFT RDS | DATE 07/19/07
APVD | SCALE 1=1.0

UNIT OF MEASUREMENT
MILLIMETER [INCH]
DO NOT SCALE THIS DRAWING

DESCRIPTION
RSM RKM 50−*M

IDENTIFICATION NO.

REV F

FILE: 777003349

SHEET 1 OF 1