THERMASGARD® HFTM

Sleeve sensor with temperature measuring transducer, calibratable, with multi-range switching and active output (Automatic Output Switching)

NEW

S+S REGELTECHNIK

Patented quality product (patent no. DE 10 2015 015 941 B4)

Calibratable temperature measuring transducer with sleeve sensor **THERM**ASGARD® **HFTM**, with eight switchable measuring ranges (max. –20...+150 °C), aktivem Ausgang, housing made from impact-resistant plastic with quick-release screws, with cable gland or M12 connector according to DIN EN 61076-2-101, optionally with/without display. The standard display can be changed from SI [°C] to imperial [°F] units via DIP switch.

The measuring transducer converts the measured variables into a standard signal of 0-10 V or 4...20 mA. The unit with **Automatic Output Switching** (AOS) detects the required output type and automatically switches to U or I output. Alternatively, a **type version** (2-wire) with 2-wire connection and I output is available.

The temperature transmitter with remote sensor is used to detect temperatures in liquid and gaseous media e.g. if installed in an immersion sleeve or as a duct sensor. A direct, permanent use in liquids is possible in combination with immersion sleeves **THE** (see chapter Accessories). The sensor is factory-calibrated; an environmental precision adjustment by an expert is possible.

HFTM
with cable gland



HFTM - Q
with M12 connector



TECHNICAL DATA

HFTM - I	
Power supply:	15...36 V DC, depending on working resistance, residual ripple stabilised ± 0.3 V
Working resistance:	R_a (Ohm) = (U_b -14 V) / 0.02 A
Connection type:	2-wire connection
Output:	**4...20 mA**
HFTM - A (AOS)	
Power supply:	24 V AC / DC (± 10 %)
Load resistance:	R_L = 25...450 Ohm with AOS I variant R_L > 15 kOhm with AOS U variant
Connection type:	3-wire connection
Output:	**automatic 0-10 V / 4...20 mA** (via **Automatic Output Switching** – the unit detects the required output type and automatically switches to U or I output)
GENERAL	
Power consumption:	< 1.0 VA / 24 V DC; < 2.2 VA / 24 V AC
System of units:	**SI** (default) or **Imperial** (switchable via DIP switch)
Data points:	Temperature [°C] [°F]
Measuring ranges:	**multi-range switching with 8 measuring ranges,** see table (other ranges optional) **with manual zero point correction (± 10 K)**
Sensor:	Pt1000, DIN EN 60751, class B (**Perfect Sensor Protection**) at IP68)
Deviation, temperature:	typically ± 0.2 K at +25 °C
Insulating resistance:	≥ 100 MΩ, at +20 °C (500 V DC)
Sensor protection:	sensor sleeve, stainless steel V4A (1.4571), Ø = 6 mm, nominal length NL = 50 mm (optional 30...400 mm)
Sensor cable:	Silicone, SiHF, 2x 0.25mm²; cable length (KL) = 1.5m (other lengths and jacket materials, e.g. PTFE or glass fibre with steel mesh, available on request)
Housing:	plastic, UV-resistant, material polyamide, 30 % glass-globe reinforced, with quick-release screws (slotted / Phillips head combination), colour traffic white (similar to RAL 9016), cover for display is transparent!
Housing dimension:	72 x 64 x 37.8 mm (Tyr 1 without display) 72 x 64 x 43.3 mm (Tyr 1 with display)
Cable connection:	**cable gland**, plastic (M 16 x 1.5; with strain relief, exchangeable, max. inner diameter 10.4 mm) **or** **M12 connector** (male, 5-pin, A-code) according to DIN EN 61076-2-101
Electrical connection:	0.14 - 1.5 mm², via terminal screws
Ambient temperature:	measuring transducer –30...+70 °C
Permissible humidity:	< 95 % RH, non-precipitating air
Protection class:	III (according to EN 60 730)
Protection type housing:	**IP 65** (according to EN 60 529) Housing tested, TÜV SÜD, Report No. 713139052 (Tyr 1)
Protection type sensor:	**IP 65** (according to EN 60 529) **sleeve** humidity-tight (standard) **IP 68** (according to EN 60 529) **sleeve** water-tight (optional) **IP 54** (according to EN 60 529) with **glass fibre** cable (optional)
Standards:	CE conformity, electromagnetic compatibility according to EN 61326, according to EMC directive 2014 / 30 / EU
Optional:	two-line **display with illumination**, cutout approx. 36 x 15 mm (W x H), for displaying the ACTUAL temperature and the internal diagnostics (sensor breakage, sensor short circuit)
ACCESSORIES	(see table)

Display and internal diagnostics
THERMASGARD®
Measuring transducer with display



Temperature [°C]



Temperature [°F]



Sensor breakage



Sensor short circuit

S+S REGELTECHNIK

NEW

THERMASGARD® HFTM

Sleeve sensor with temperature measuring transducer, calibratable, with multi-range switching and active output (Automatic Output Switching)

Dimensional drawing
[mm]

HFTM

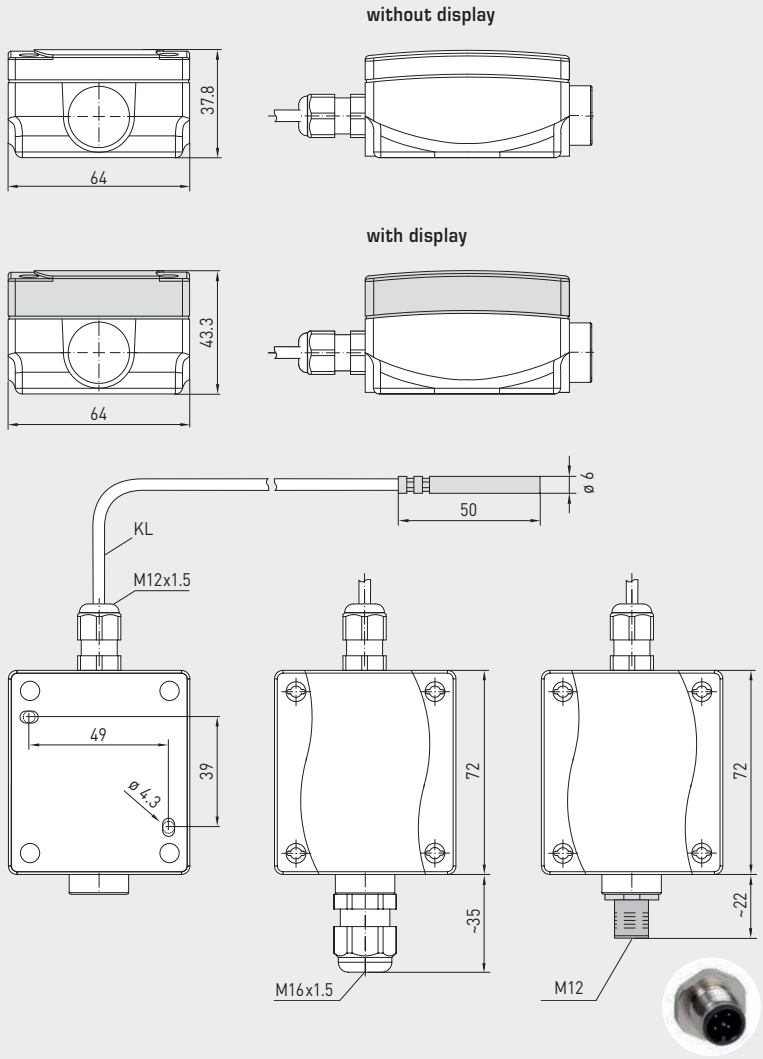

Housing with **cable gland**

Housing with **M12 connector**

HFTM
with cable gland
and display



HFTM-Q
with M12 connector
and display



High-performance encapsulation against vibration, mechanical stress and humidity

PS-PROTECTION
PERFECT SENSOR PROTECTION

Automatic detection and switching to standard signal 0...10 V or 4...20 mA

AOS-PATENTED
AUTOMATIC OUTPUT SWITCHING



IP65 (standard)
humidity-tight



IP68 (optional)
water-tight
Perfect Sensor Protection



IP54 (optional)
with **glass fibre** cable

THERMASGARD® HFTM

Sleeve sensor with temperature measuring transducer, calibratable, with multi-range switching and active output (Automatic Output Switching)

NEW

S+S REGELTECHNIK

Schematic diagram **HFTM xx**

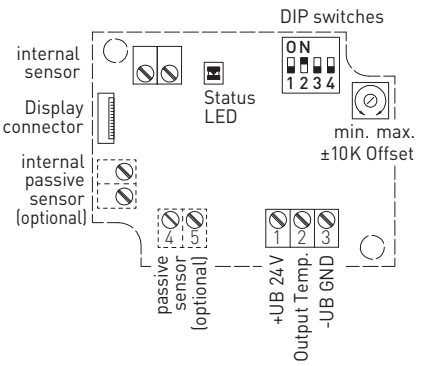

2-wire connection* **HFTM - I**

1	+UB 24V DC
2	Output Temp. 4...20mA
3	–UB GND (optional for backlighting)

* 2-wire connection for devices with / without display (not illuminated)
3-wire connection for devices with illuminated display

3-wire connection (AOS) **HFTM - A**

1	+UB 24V AC/DC
2	Output Temp. 0-10V / 4...20mA
3	–UB GND

Pin assignment (M12) **HFTM xx**

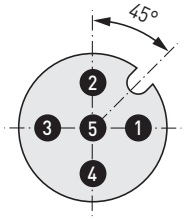

1. +UB 24V
2. Output temperature
3. free
4. –UB GND
5. Shield

Measuring ranges [°C] (adjustable)	DIP 1	DIP 2	DIP 3
–20...+150 °C	**ON**	**ON**	**ON**
–50... +50 °C	OFF	**ON**	**ON**
–20... +80 °C	**ON**	OFF	**ON**
–30... +60 °C	OFF	OFF	**ON**
0... +40 °C	**ON**	**ON**	OFF
0... +50 °C (default)	OFF	**ON**	OFF
0...+100 °C	**ON**	OFF	OFF
0...+150 °C	OFF	OFF	OFF

Display (switchable)		DIP 4
Imperial	[°F]	**ON**
SI (default)	[°C]	OFF

Display
Temperature [°C] → [°F]

The display value depends on the set unit system (**DIP4**).

SI IMP

Load resistance diagram (2-wire) **HFTM - I**

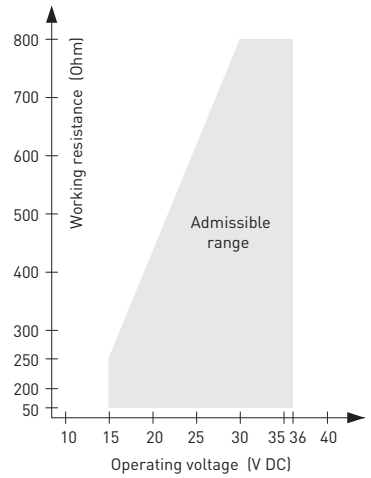

For further technical information, see the operating instructions

S+S REGELTECHNIK

NEW

THERMASGARD® HFTM

Sleeve sensor with temperature measuring transducer, calibratable, with multi-range switching and active output (Automatic Output Switching)

HFTM-Q
with M12 connector





HFTM
with cable gland

THERMASGARD® **HFTM**	Sleeve sensor with temperature measuring transducer **(with cable gland)**				
Type / WG01	**Output**	**Type**	**Display**	**Item No.**	**Price**
HFTM-I	**(2-wire)**				
HFTM-I	4...20 mA	Remote sensor		1101-1152-0219-920	**107,65 €**
HFTM-I LCD	4...20 mA	Remote sensor	■	1101-1152-2219-920	**160,11 €**
HFTM-A	**(3-wire AOS)**				
HFTM-A	0-10 V / 4...20 mA	Remote sensor		1101-115E-0219-920	**107,65 €**
HFTM-A LCD	0-10 V / 4...20 mA	Remote sensor	■	1101-115E-2219-920	**160,11 €**
Automatic Output Switching (AOS):	Patented analogueinterface (patent no. DE 10 2015 015 941 B4) Unit automatically detects the required output type 0-10 V or 4...20 mA.				
Housing variant:	Cable connection **with cable gland**				
Extra charge:	other measuring ranges optional				**26,16 €**
	Protection type **IP68** (Sensor sleeve watertight compound-filled)				**3,50 €**
	2-wire connecting leads, per running meter (**silicone / PTFE / glass fibre**)			on request	
	Other lengths of protection sleeve optional			on request	

THERMASGARD® **HFTM-Q**	Sleeve sensor with temperature measuring transducer **(with M12 connector)**				
Type / WG01I	**Output**	**Type**	**Display ● = Q**	**Item No.**	**Price**
HFTM-I Q	**(2-wire)**				
HFTM-I Q	4...20 mA	Remote sensor	●	2001-2111-2100-001	**150,82 €**
HFTM-I Q LCD	4...20 mA	Remote Sensor	● ■	2001-2112-2100-001	**203,28 €**
HFTM-A Q	**(3-wire AOS)**				
HFTM-A Q	0-10 V / 4...20 mA	Remote sensor	●	2001-2111-B100-001	**150,82 €**
HFTM-A Q LCD	0-10 V / 4...20 mA	Remote Sensor	● ■	2001-2112-B100-001	**203,28 €**
Automatic Output Switching (AOS):	Patented analogueinterface (patent no. DE 10 2015 015 941 B4) Unit automatically detects the required output type 0-10 V or 4...20 mA.				
Housing variant "Q":	Cable connection **with M12 connector** (male, **5-pin**, A-code)				
Extra charge:	see table above!				

ACCESSORIES		
THE-xx	**Immersion sleeve**, stainless steel **V4A** (1.4571) or nickel-plated brass, Ø = 9 mm	
	Special accessories for M12 connector	see chapter Accessories!