XW4M/XW4N

3.5mm-Pitch Push-In Terminal Block PCB Connectors

3.5mm-pitch push-in terminal block PCB connectors to greatly improve the efficiency of connector inserting & removing and cable wiring.

- Easy insertion & removal and high contact reliability are achieved with the unique connector engagement structure. It contributes to enhanced efficiency of inspection, assembly and maintenance.
- Compatible with through-hole-reflow, good for reflow mounting.
- Standard pin-number printed on the top surface of the socket, no extra spaces needed for pin identification such as on the surface of the PCB.
- Wiring efficiency is improved with the "hands-free" mechanism that keeps screwdriver inserted.
- See the "Standards certification / conformity list" for information on conformity to certification standards.

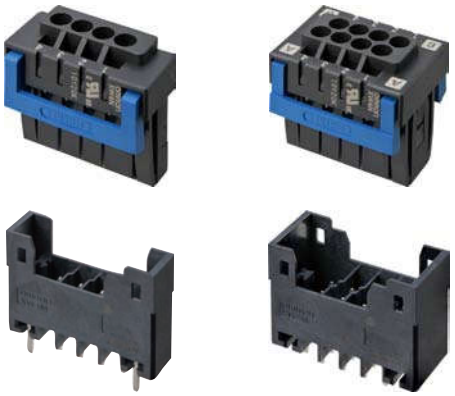

RoHS Compliant

⚠ Refer to "Precautions" on page 10 to 12.

List

Model	Single-Row Type, Straight Terminals	Single-Row Type, Right-Angle Terminals	Double-Row Type, Straight Terminals	Double-Row Type, Right-Angle Terminals
	XW4M-□□D1-V1D□	XW4M-□□D1-H1D□	XW4M-□□D2-V1D□	XW4M-□□D2-H1D□
Plug				
Model	Single-Row Type		Double-Row Type	
	XW4N-□□D1-□		XW4N-□□D2-□	
Socket				

Part Number Structure

3.5mm-pitch Push-in Terminal Block PCB Connectors

Plug: XW4M-□□D□-□□D□
(1) (2) (3) (4)

Socket: XW4N-□□D□-□
(1) (2) (4)

(1)	(2)	(3)	(4)
Number of Contacts	1: Single-Row 2: Double-Row	V1: Straight Terminals H1: Right-Angle Terminals	S: Tin Plating A: Gold Plating

Ratings

Applicable wire ranges *1	Cross section of solid wire	0.2 mm² to 1.5 mm²	
	Cross section of stranded wire	0.2 mm² to 1.5 mm²	
	Cross section of stranded wire with ferrule with plastic sleeve	0.2 mm² to 0.75 mm²	
	Cross section of stranded wire with ferrule without plastic sleeve	0.2 mm² to 1.5 mm²	
Stripping length of solid and stranded wires		9.5 mm MIN	
IEC rated voltage (III/3)		160 V	
IEC rated current		8 A	
Usage group (UG)		B	D
UL rated voltage		300 V (Only XW4N-□□D□-□, XW4M-□□D1-□□D□)	300 V
		150 V (Only XW4M-□□D2-□□D□)	
UL rated current		8 A	
Withstand voltage		1,600 VAC 1 min (leakage current: 1 mA max.)	
Applicable tool		XW4Z-00B *2	

*1. Refer to page 11 for details of applicable wire ranges and recommended ferrule terminals.
*2. Refer to page 12 for details of recommended tools.

Characteristics

Ambient temperature range	-40 to 100°C (with no condensation or icing)
Ambient humidity range	5 to 85%RH
Ambient storage temperature	-40 to 70°C (with no condensation or icing)
Ambient storage humidity	5 to 70%RH
Connectors mating temperature range	-5 to 40°C (with no condensation or icing)
Connectors mating humidity range	5 to 70%RH
Insertion durability	100 times

Materials and Finishes

Plug: XW4M

Item \ Model	Tin Plating XW4M-□□D□-□□DS	Gold Plating XW4M-□□D□-□□DA
Housing Plug	LCP (UL94 V-0)	
Plug contact	Copper alloy Terminal part: Tin plating Mating section: Tin plating	Copper alloy Terminal part: Tin plating Mating section: Gold plating
Fastening pins*	Copper alloy/Tin plating	

*Fastening pins are for 10 contacts max. only

Socket: XW4N

Item \ Model	Tin Plating XW4N-□□D□-S	Gold Plating XW4N-□□D□-A
Housing cover	PA (UL94 V-0)	
Housing Socket	PA (UL94 V-0)	
Lever	PBT (UL94 V-0)	
Socket contact	Copper alloy Wiring section: Tin plating Mating section: Tin plating	Copper alloy Wiring section: Tin plating Mating section: Gold plating
Spring	Stainless steel	Stainless steel

Standards

Compliant standard	UL1059
	CSA (C22.2No.158)
	IEC 60947-7-4

XW4M

Dimensions

CAD Data **Please visit our CAD Data website, which is noted on the last page.**

(Unit: mm)

XW4M-□□D1-V1D□ (straight terminals)

CAD Data



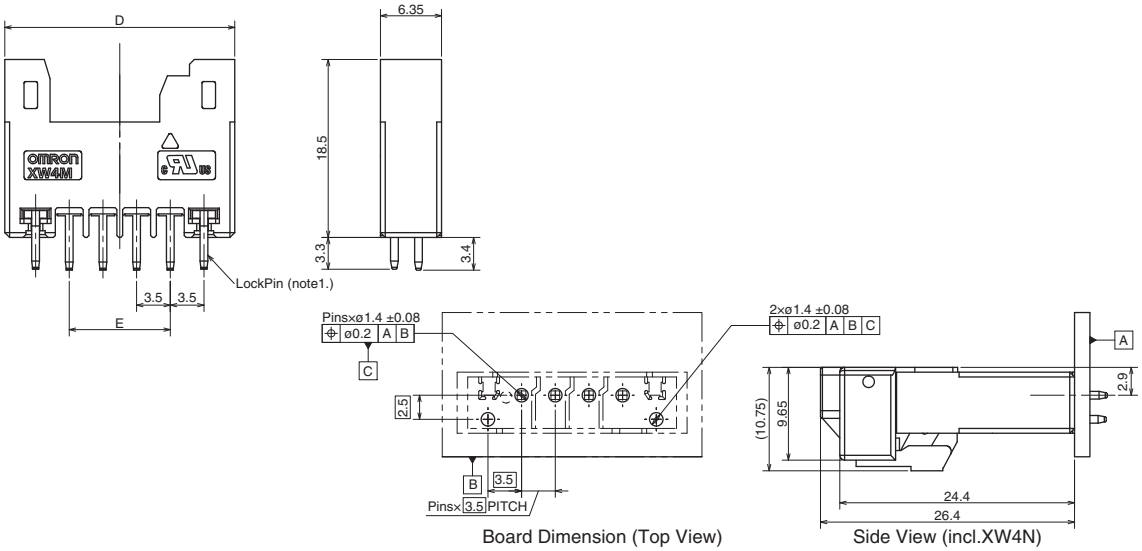

XW4M-□□D1-H1D□ (right-angle terminals)



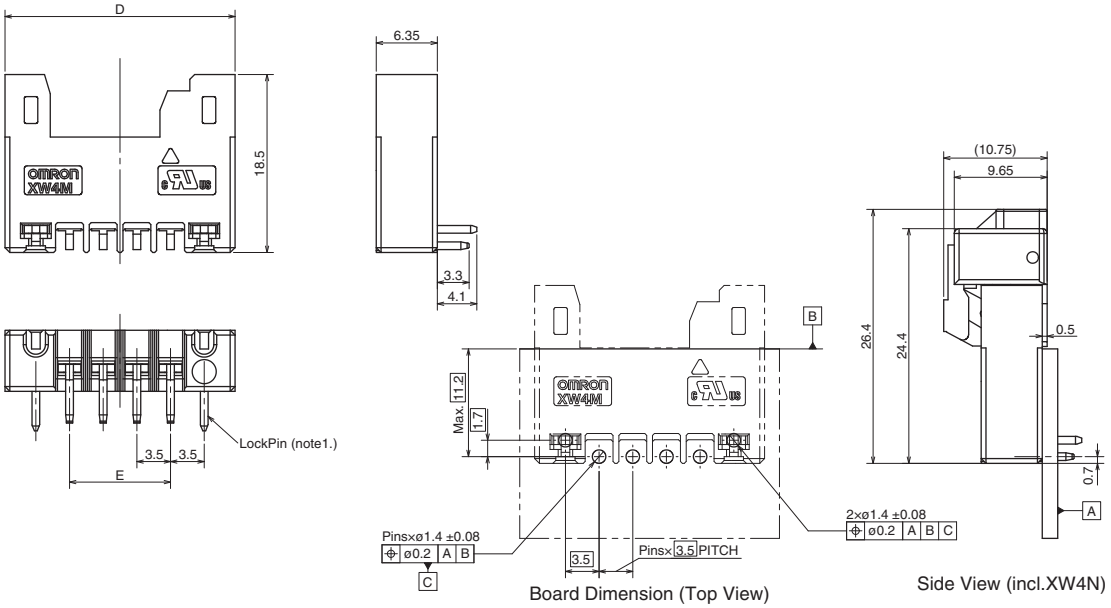

Dimensions

Number of contacts	Model (straight)	Model (right-angle)	D	E	Lock pins	Number of contacts	Model (straight)	Model (right-angle)	D	E	Lock pins
2	XW4M-02D1-V1D□	XW4M-02D1-H1D□	16.9	3.5	w/	11	XW4M-11D1-V1D□	XW4M-11D1-H1D□	48.4	35.0	w/o
3	XW4M-03D1-V1D□	XW4M-03D1-H1D□	20.4	7.0	w/	12	XW4M-12D1-V1D□	XW4M-12D1-H1D□	51.9	38.5	w/o
4	XW4M-04D1-V1D□	XW4M-04D1-H1D□	23.9	10.5	w/	13	XW4M-13D1-V1D□	XW4M-13D1-H1D□	55.4	42.0	w/o
5	XW4M-05D1-V1D□	XW4M-05D1-H1D□	27.4	14.0	w/	14	XW4M-14D1-V1D□	XW4M-14D1-H1D□	58.9	45.5	w/o
6	XW4M-06D1-V1D□	XW4M-06D1-H1D□	30.9	17.5	w/	15	XW4M-15D1-V1D□	XW4M-15D1-H1D□	62.4	49.0	w/o
7	XW4M-07D1-V1D□	XW4M-07D1-H1D□	34.4	21.0	w/	16	XW4M-16D1-V1D□	XW4M-16D1-H1D□	65.9	52.5	w/o
8	XW4M-08D1-V1D□	XW4M-08D1-H1D□	37.9	24.5	w/	17	XW4M-17D1-V1D□	XW4M-17D1-H1D□	69.4	56.0	w/o
9	XW4M-09D1-V1D□	XW4M-09D1-H1D□	41.4	28.0	w/	18	XW4M-18D1-V1D□	XW4M-18D1-H1D□	72.9	59.5	w/o
10	XW4M-10D1-V1D□	XW4M-10D1-H1D□	44.9	31.5	w/	20	XW4M-20D1-V1D□	XW4M-20D1-H1D□	79.9	66.5	w/o

Dimensions

CAD Data Please visit our CAD Data website, which is noted on the last page.

(Unit: mm)

XW4M-□□D2-V1D□ (straight terminals)

CAD Data

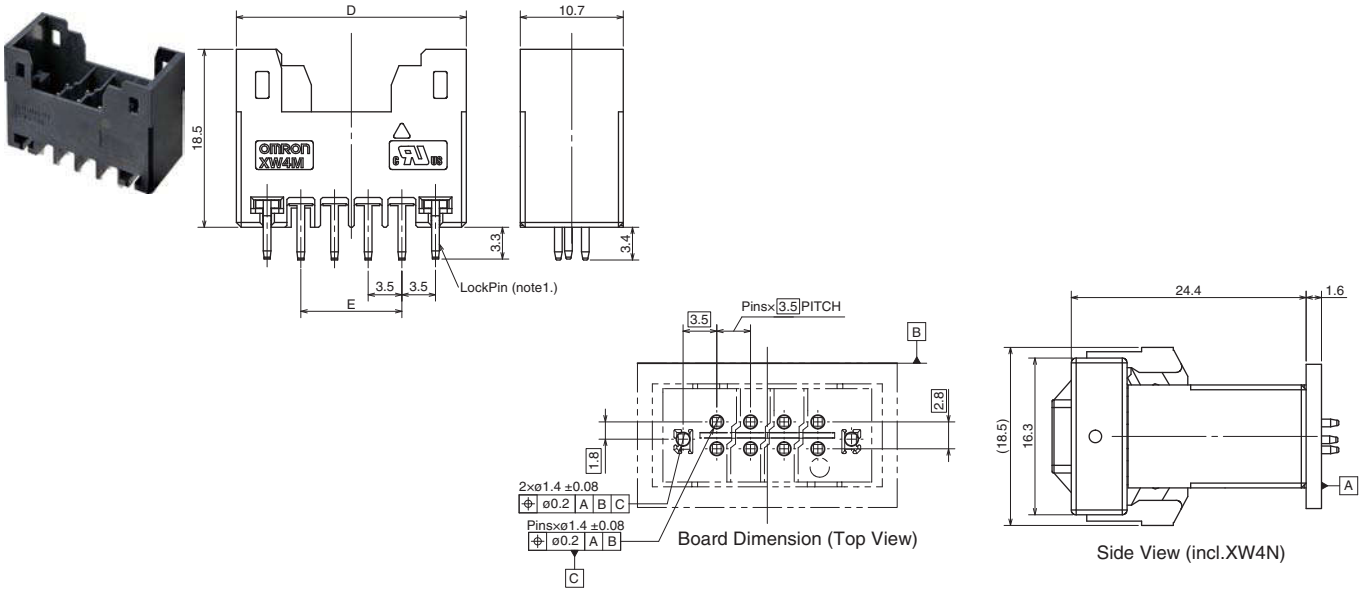

XW4M-□□D2-H1D□ (right-angle terminals)

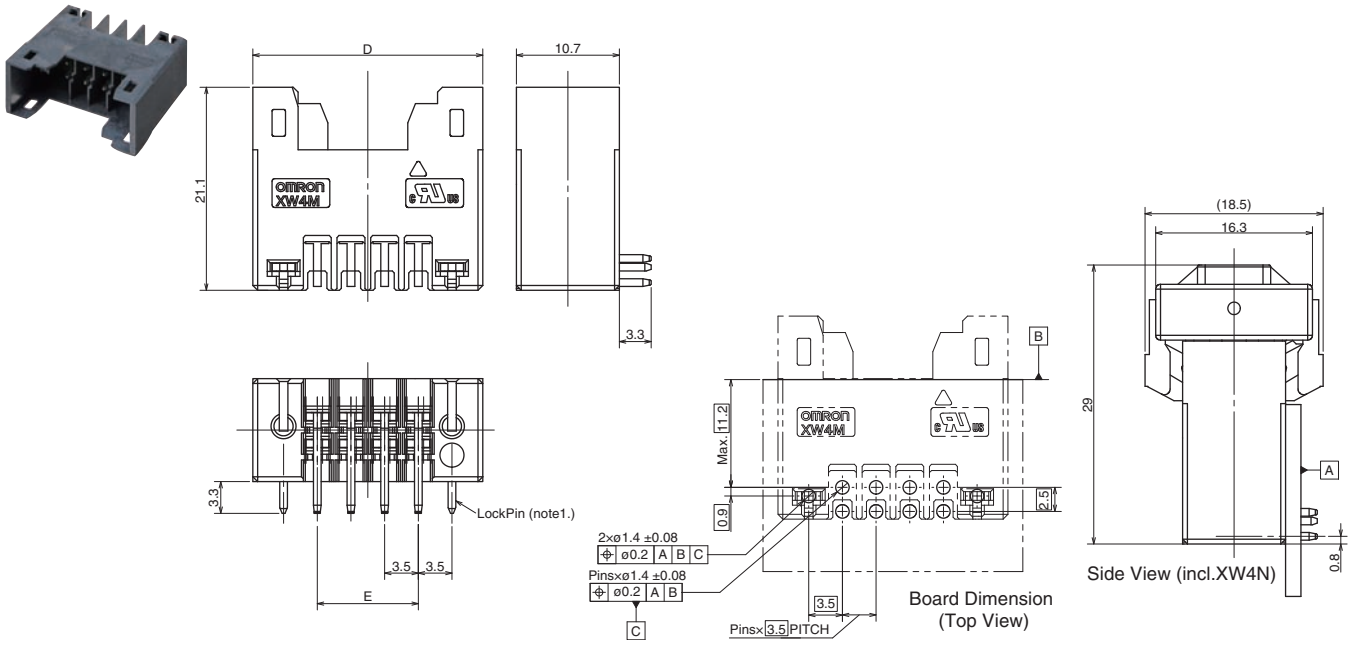

Dimensions

Number of contacts	Model (straight)	Model (right-angle)	D	E	Lock pins	Number of contacts	Model (straight)	Model (right-angle)	D	E	Lock pins
4	XW4M-04D2-V1D□	XW4M-04D2-H1D□	16.9	3.5	w/	22	XW4M-22D2-V1D□	XW4M-22D2-H1D□	48.4	35.0	w/o
6	XW4M-06D2-V1D□	XW4M-06D2-H1D□	20.4	7.0	w/	24	XW4M-24D2-V1D□	XW4M-24D2-H1D□	51.9	38.5	w/o
8	XW4M-08D2-V1D□	XW4M-08D2-H1D□	23.9	10.5	w/	26	XW4M-26D2-V1D□	XW4M-26D2-H1D□	55.4	42.0	w/o
10	XW4M-10D2-V1D□	XW4M-10D2-H1D□	27.4	14.0	w/	28	XW4M-28D2-V1D□	XW4M-28D2-H1D□	58.9	45.5	w/o
12	XW4M-12D2-V1D□	XW4M-12D2-H1D□	30.9	17.5	w/o	30	XW4M-30D2-V1D□	XW4M-30D2-H1D□	62.4	49.0	w/o
14	XW4M-14D2-V1D□	XW4M-14D2-H1D□	34.4	21.0	w/o	32	XW4M-32D2-V1D□	XW4M-32D2-H1D□	65.9	52.5	w/o
16	XW4M-16D2-V1D□	XW4M-16D2-H1D□	37.9	24.5	w/o	34	XW4M-34D2-V1D□	XW4M-34D2-H1D□	69.4	56.0	w/o
18	XW4M-18D2-V1D□	XW4M-18D2-H1D□	41.4	28.0	w/o	36	XW4M-36D2-V1D□	XW4M-36D2-H1D□	72.9	59.5	w/o
20	XW4M-20D2-V1D□	XW4M-20D2-H1D□	44.9	31.5	w/o	40	XW4M-40D2-V1D□	XW4M-40D2-H1D□	79.9	66.5	w/o

Ordering Information

Plug, Single-Row, Straight Terminals



Plug, Single-Row, Right-Angle Terminals



Number of contacts	Plug, Single-Row, Straight		Plug, Single-Row, Right-Angle		Minimum Packaging Quantity (pcs)
	Tin Plating	Gold plating	Tin Plating	Gold plating	
2	XW4M-02D1-V1DS	XW4M-02D1-V1DA	XW4M-02D1-H1DS	XW4M-02D1-H1DA	85
3	XW4M-03D1-V1DS	-	XW4M-03D1-H1DS	-	70
4	XW4M-04D1-V1DS	XW4M-04D1-V1DA	XW4M-04D1-H1DS	XW4M-04D1-H1DA	60
5	XW4M-05D1-V1DS	-	XW4M-05D1-H1DS	-	50
6	XW4M-06D1-V1DS	XW4M-06D1-V1DA	XW4M-06D1-H1DS	XW4M-06D1-H1DA	45
7	XW4M-07D1-V1DS	-	XW4M-07D1-H1DS	-	40
8	XW4M-08D1-V1DS	XW4M-08D1-V1DA	XW4M-08D1-H1DS	XW4M-08D1-H1DA	35
9	XW4M-09D1-V1DS	-	XW4M-09D1-H1DS	-	35
10	XW4M-10D1-V1DS	XW4M-10D1-V1DA	XW4M-10D1-H1DS	XW4M-10D1-H1DA	30
11	XW4M-11D1-V1DS	-	XW4M-11D1-H1DS	-	30
12	XW4M-12D1-V1DS	XW4M-12D1-V1DA	XW4M-12D1-H1DS	XW4M-12D1-H1DA	25
13	XW4M-13D1-V1DS	-	XW4M-13D1-H1DS	-	25
14	XW4M-14D1-V1DS	XW4M-14D1-V1DA	XW4M-14D1-H1DS	XW4M-14D1-H1DA	20
15	XW4M-15D1-V1DS	-	XW4M-15D1-H1DS	-	20
16	XW4M-16D1-V1DS	XW4M-16D1-V1DA	XW4M-16D1-H1DS	XW4M-16D1-H1DA	20
17	XW4M-17D1-V1DS	-	XW4M-17D1-H1DS	-	20
18	XW4M-18D1-V1DS	XW4M-18D1-V1DA	XW4M-18D1-H1DS	XW4M-18D1-H1DA	20
20	XW4M-20D1-V1DS	XW4M-20D1-V1DA	XW4M-20D1-H1DS	XW4M-20D1-H1DA	15

Plug, Double-Row, Straight Terminals



Plug, Double-Row, Right-Angle Terminals



Number of contacts	Plug, Double-Row, Straight		Plug, Double-Row, Right-Angle		Minimum Packaging Quantity (pcs)
	Tin Plating	Gold Plating	Tin Plating	Gold Plating	
4	XW4M-04D2-V1DS	XW4M-04D2-V1DA	XW4M-04D2-H1DS	XW4M-04D2-H1DA	85
6	XW4M-06D2-V1DS	-	XW4M-06D2-H1DS	-	70
8	XW4M-08D2-V1DS	XW4M-08D2-V1DA	XW4M-08D2-H1DS	XW4M-08D2-H1DA	60
10	XW4M-10D2-V1DS	-	XW4M-10D2-H1DS	-	50
12	XW4M-12D2-V1DS	XW4M-12D2-V1DA	XW4M-12D2-H1DS	XW4M-12D2-H1DA	45
14	XW4M-14D2-V1DS	-	XW4M-14D2-H1DS	-	40
16	XW4M-16D2-V1DS	XW4M-16D2-V1DA	XW4M-16D2-H1DS	XW4M-16D2-H1DA	35
18	XW4M-18D2-V1DS	-	XW4M-18D2-H1DS	-	35
20	XW4M-20D2-V1DS	XW4M-20D2-V1DA	XW4M-20D2-H1DS	XW4M-20D2-H1DA	30
22	XW4M-22D2-V1DS	XW4M-22D2-V1DA	XW4M-22D2-H1DS	XW4M-22D2-H1DA	30
24	XW4M-24D2-V1DS	XW4M-24D2-V1DA	XW4M-24D2-H1DS	XW4M-24D2-H1DA	25
26	XW4M-26D2-V1DS	-	XW4M-26D2-H1DS	-	25
28	XW4M-28D2-V1DS	-	XW4M-28D2-H1DS	-	20
30	XW4M-30D2-V1DS	XW4M-30D2-V1DA	XW4M-30D2-H1DS	XW4M-30D2-H1DA	20
32	XW4M-32D2-V1DS	XW4M-32D2-V1DA	XW4M-32D2-H1DS	XW4M-32D2-H1DA	20
34	XW4M-34D2-V1DS	XW4M-34D2-V1DA	XW4M-34D2-H1DS	XW4M-34D2-H1DA	20
36	XW4M-36D2-V1DS	XW4M-36D2-V1DA	XW4M-36D2-H1DS	XW4M-36D2-H1DA	20
40	XW4M-40D2-V1DS	XW4M-40D2-V1DA	XW4M-40D2-H1DS	XW4M-40D2-H1DA	15

Dimensions

CAD Data Please visit our CAD Data website, which is noted on the last page.

(Unit: mm)

XW4N-□□D1-□

CAD Data



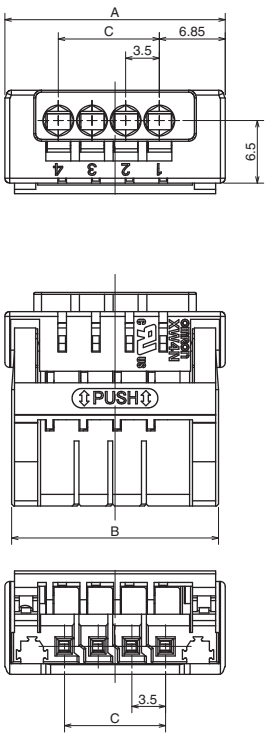

Dimensions

Number of contacts	Model	A	B	C
2	XW4N-02D1-□	15.9	14.5	3.5
3	XW4N-03D1-□	19.4	18	7
4	XW4N-04D1-□	22.9	21.5	10.5
5	XW4N-05D1-□	26.4	25	14
6	XW4N-06D1-□	29.9	28.5	17.5
7	XW4N-07D1-□	33.4	32	21
8	XW4N-08D1-□	36.9	35.5	24.5
9	XW4N-09D1-□	40.4	39	28
10	XW4N-10D1-□	43.9	42.5	31.5
11	XW4N-11D1-□	47.4	46	35
12	XW4N-12D1-□	50.9	49.5	38.5
13	XW4N-13D1-□	54.4	53	42
14	XW4N-14D1-□	57.9	56.5	45.5
15	XW4N-15D1-□	61.4	60	49
16	XW4N-16D1-□	64.9	63.5	52.5
17	XW4N-17D1-□	68.4	67	56
18	XW4N-18D1-□	71.9	70.5	59.5
20	XW4N-20D1-□	78.9	77.5	66.5

XW4N

Dimensions

CAD Data Please visit our CAD Data website, which is noted on the last page.

(Unit: mm)

XW4N-□□D2-□

CAD Data



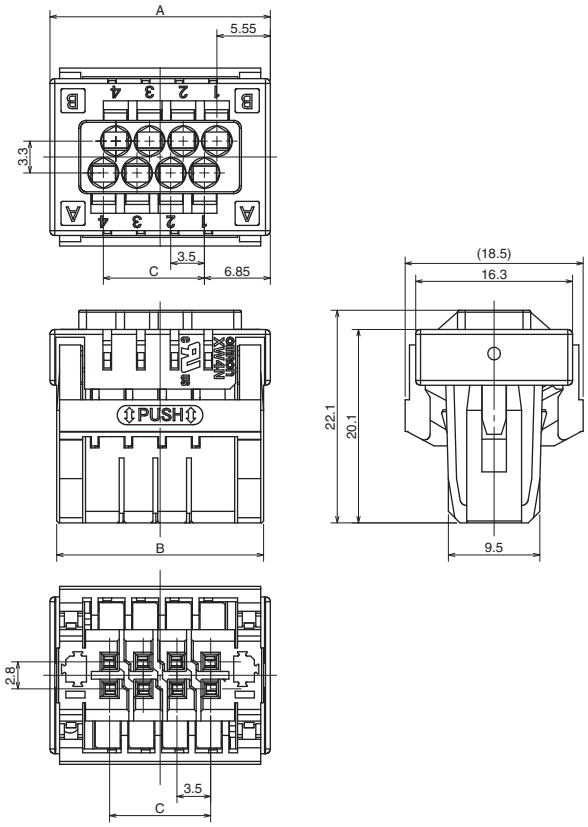

Dimensions

Number of contacts	Model	A	B	C
4	XW4N-04D2-□	15.9	14.5	3.5
6	XW4N-06D2-□	19.4	18	7
8	XW4N-08D2-□	22.9	21.5	10.5
10	XW4N-10D2-□	26.4	25	14
12	XW4N-12D2-□	29.9	28.5	17.5
14	XW4N-14D2-□	33.4	32	21
16	XW4N-16D2-□	36.9	35.5	24.5
18	XW4N-18D2-□	40.4	39	28
20	XW4N-20D2-□	43.9	42.5	31.5
22	XW4N-22D2-□	47.4	46	35
24	XW4N-24D2-□	50.9	49.5	38.5
26	XW4N-26D2-□	54.4	53	42
28	XW4N-28D2-□	57.9	56.5	45.5
30	XW4N-30D2-□	61.4	60	49
32	XW4N-32D2-□	64.9	63.5	52.5
34	XW4N-34D2-□	68.4	67	56
36	XW4N-36D2-□	71.9	70.5	59.5
40	XW4N-40D2-□	78.9	77.5	66.5

Ordering Information

Socket, Single-Row



Number of contacts	Tin Plating	Gold Plating	Minimum Packaging Quantity (pcs)
2	XW4N-02D1-S	XW4N-02D1-A	190
3	XW4N-03D1-S	-	160
4	XW4N-04D1-S	XW4N-04D1-A	130
5	XW4N-05D1-S	-	110
6	XW4N-06D1-S	XW4N-06D1-A	100
7	XW4N-07D1-S	-	90
8	XW4N-08D1-S	XW4N-08D1-A	80
9	XW4N-09D1-S	-	70
10	XW4N-10D1-S	XW4N-10D1-A	70
11	XW4N-11D1-S	-	60
12	XW4N-12D1-S	XW4N-12D1-A	60
13	XW4N-13D1-S	-	50
14	XW4N-14D1-S	XW4N-14D1-A	50
15	XW4N-15D1-S	-	50
16	XW4N-16D1-S	XW4N-16D1-A	40
17	XW4N-17D1-S	-	40
18	XW4N-18D1-S	XW4N-18D1-A	40
20	XW4N-20D1-S	XW4N-20D1-A	30

Socket, Double-Row



Number of contacts	Tin Plating	Gold Plating	Minimum Packaging Quantity (pcs)
4	XW4N-04D2-S	XW4N-04D2-A	133
6	XW4N-06D2-S	-	105
8	XW4N-08D2-S	XW4N-08D2-A	91
10	XW4N-10D2-S	-	77
12	XW4N-12D2-S	XW4N-12D2-A	70
14	XW4N-14D2-S	-	63
16	XW4N-16D2-S	XW4N-16D2-A	56
18	XW4N-18D2-S	-	49
20	XW4N-20D2-S	XW4N-20D2-A	42
22	XW4N-22D2-S	XW4N-22D2-A	42
24	XW4N-24D2-S	XW4N-24D2-A	35
26	XW4N-26D2-S	-	35
28	XW4N-28D2-S	-	35
30	XW4N-30D2-S	XW4N-30D2-A	28
32	XW4N-32D2-S	XW4N-32D2-A	28
34	XW4N-34D2-S	XW4N-34D2-A	28
36	XW4N-36D2-S	XW4N-36D2-A	28
40	XW4N-40D2-S	XW4N-40D2-A	21

Accessories

● **Screwdriver**

Appearance	Model	Description of Application
	**XW4Z-00B**	Screwdriver for XW4N only.

Precautions

Definition of Warning and Caution

Precautions for Safe Use	Indicates the items to be implemented or avoided to ensure a safe use of the product.
Precautions for Correct Use	Indicates the items to be implemented or avoided to prevent failure to operate and malfunctions, and to prevent adversely affecting the performance and function of the product.

Precautions for Safe Use

- Observe the ratings, specifications and storage conditions.
- Do not drop the product. Doing so may result in the product's failure to fully demonstrate its functions.
- Do not damage the cores when stripping.
- Do not use in areas subject to high temperatures, high humidity, or toxic gases such as sulfuric gas (H_2S, SO_2), ammonia gas (NH_3), nitric gas (HNO_3), or chlorine gas (Cl_2). Otherwise, it can cause corrosive damage to the contacts and result in malfunction.
- Do not use the product in oil or water, or in an environment always subjected to splashes of water or oil. Doing so can cause malfunction due to ingression of water or oil.
- Do not use or store the product in the following environment.
  - Places subject to intense temperature change
  - Places subject to high humidity, condensation
  - Places subject to intense vibration
  - Places subject to direct sunlight
  - Places subject to sea breeze
- Do not perform wiring to the release hole.
- Do not tilt or twist the flat-blade screwdriver while it is still inserted into the release hole. Doing so may result in damage to the terminal block.
- Make sure not to drop the flat-blade screwdriver inserted into the release hole.
- Do not forcibly bend or stretch the wire. Doing so may result in wire breakage. In addition, do not apply excessive force to the connector. Doing so will result in poor contact due to damage or deformation.
- Do not insert more than one wire into one terminal (insertion) hole.
- To prevent wiring materials from smoking or ignition, confirm wire ratings.
- Do not touch the product with wet hands.

Precautions for Correct Use

- When wiring, please see that no stress will be applied to the product and wires. Secure the wires so that they will not vibrate with the equipment, etc. at set state.
- Do not perform wiring with power turned on.

● Connecting Wires with Ferrules and Solid Wires

Insert the solid wire or ferrule straight into the terminal block until the end strikes the terminal block. If a wire is difficult to connect because it is too thin, use a flat-blade screwdriver in the same way as when connecting stranded wire.

● Connecting Stranded Wires

Use the following procedure to connect the wires to the terminal block.

(1) Hold a flat-blade screwdriver at an angle and insert it into the release hole. The angle should be between 10° and 15°. If the flat-blade screwdriver is inserted correctly, you will feel the spring in the release hole.
(2) With the flat-blade screwdriver still inserted into the release hole, insert the wire straight into the terminal block until the end strikes the terminal block. At that time, insert the wire at stranded state so that the elements will not be scattered.
(3) Remove the flat-blade screwdriver from the release hole.

● Removing Wires

Use the following procedure to remove wires from the terminal block. The same method is used to remove stranded wires, solid wires, and ferrules.

(1) Hold a flat-blade screwdriver at an angle and insert it into the release hole.
(2) With the flat-blade screwdriver still inserted into the release hole, remove the wire from the insertion hole.
(3) Remove the flat-blade screwdriver from the release hole.

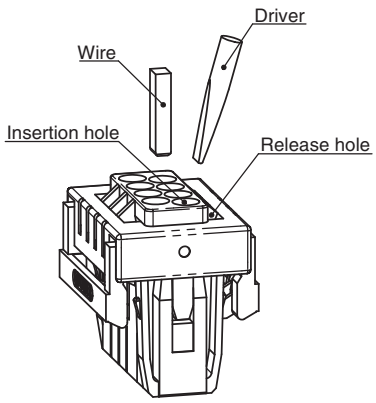

Precautions

Precautions for Correct Use

• PA is used in XW4N housing materials, and the insertion & removal force and the insertion feeling will change depending on the water absorption state.
Excessive water absorption may result in slight interference with mating components during insertion, but it will not affect the performance and functionality of the product.

● Inserting and Removing Connectors

• Inserting Connectors
Insert the connector straight into the plug while pushing the central part of the socket lever. In case of reversed insertion, the connector cannot be inserted to the end.

• Removing Connectors
Pull off the socket straight from the plug while pushing the central part of the socket lever. Do not pull off by twisting, otherwise damage may result.

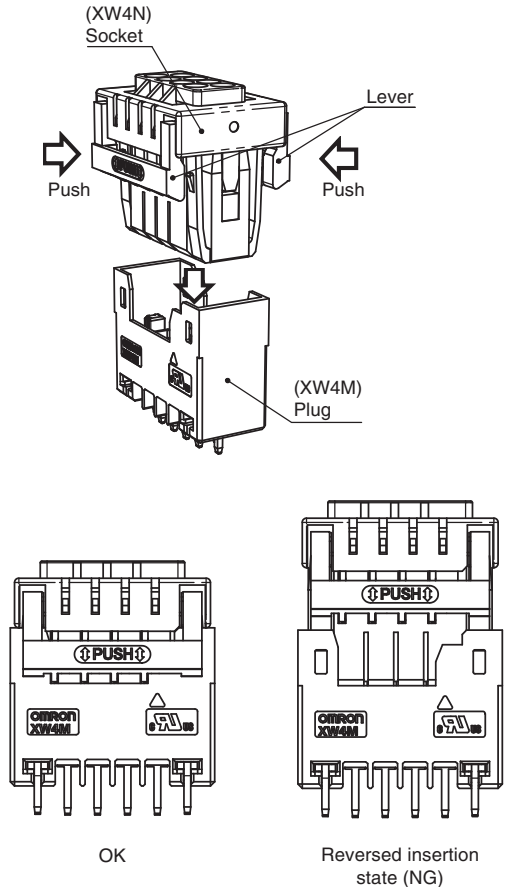

OK

Reversed insertion state (NG)

● Storage

Pay attention to the following during extended storage.

(1) Do not store in locations subject to dust or high humidity.

(2) Do not store in locations close to sources of gases such ammonia or sulfide gas.

● Applicable wire ranges

Wire Type	Ratings	Conductor Length
Solid wire	AWG24 to 16 Cross section: 0.2 to 1.5mm^2	9.5mm MIN
Stranded wire	AWG24 to 16 Cross section: 0.2 to 1.5mm^2	9.5mm MIN
Ferrule terminal With plastic sleeve	Cross section: 0.25mm^2 0.34mm^2 0.5mm^2 0.75mm^2	 8mm 8 to 10mm 8 to 10mm 10mm
Ferrule terminal Without plastic sleeve	Cross section: 0.25mm^2 0.34mm^2 0.5mm^2 0.75mm^2 1.0mm^2 1.5mm^2	 7mm 7mm 8 to 10mm 8 to 10mm 8 to 10mm 10mm

● Recommended Ferrule Terminals

• With plastic sleeve

		Manufacturer		
		Phoenix Contact	Weidmuller	Wago
Cross section	0.25mm^2	AI 0.25-8	H0.25/12	FE-0.25-8N-YE
	0.34mm^2	AI 0.34-8 AI 0.34-10	H0.35/12	FE-0.3-8N-TQ
	0.5mm^2	AI 0.5-8 AI 0.5-10	H0.5/14D	FE-0.5-8N-WH
			H0.5/16D	FE-0.5-10N-WH
	0.75mm^2	AI 0.75-10	H0.75/16D	FE-0.75-10N-GY
Crimping tool		CRIMPFOX 6	PZ 6 ROTO	Vario crimp4*1

• Without plastic sleeve

		Manufacturer		
		Phoenix Contact	Weidmuller	Wago
Cross section	0.25mm^2	A 0.25-7		
	0.34mm^2	A 0.34-7		
	0.5mm^2	A 0.5-8 A 0.5-10	H0.5/14	
	0.75mm^2	A 0.75-8 A 0.75-10	H0.75/10	
	1.0mm^2	A 1-8 A 1-10	H1.0/10	FE-1.0-10
	1.5mm^2	A 1.5-10	H1.5/10	
Crimping tool		CRIMPFOX 6	PZ 6 ROTO	Vario crimp4*1

*1. The crimping tool can only be used for 0.25 to 1.0mm2 ferrule terminals.
*2. The crimping height (H) of ferrule terminals is 1.5mm or less.
In addition, the width (H) of ferrule terminals is 2.5mm or less.
However, it is limited to crimping shapes obtained using applicable crimping tools.

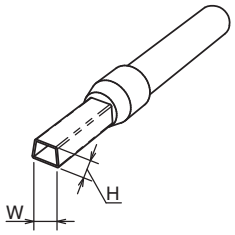

Precautions

● Recommended Flat-Blade Screwdrivers

Use a flat-blade screwdriver to connect and remove wires.
Use the following flat-blade screwdrivers.
The following table shows manufacturers and models as of December 2020.

Model	Manufacturer
ESD 0.40 × 2.5	WERA
SZS 0.4 × 2.5	PHOENIX CONTACT
SZF 0-0.4 × 2.5*	
0.4 × 2.5 × 75 302	WIHA
AEF.2.5 × 75	FACOM
210-719	WAGO
SDI 0.4 × 2.5 × 75	WEIDMULLER
9900 (-2.5-75)	VESSEL

* SZF 0-0.4×2.5 (Phoenix Contact)
can be arranged from OMRON's special model (XW4Z-00B).

● Recommended Reflow Conditions

Peak temperature: 250°C
220°C or above 45 to 90 seconds
Preheating: 150°C to 180°C
60 to 120 seconds

The solderability is not guaranteed, as above conditions may change depending on type and amount of solder, and type of flux.

MEMO

Please check each region's Terms & Conditions by region website.

OMRON Corporation

Electronic and Mechanical Components Company

Regional Contact

Americas
https://www.components.omron.com/

Europe
http://components.omron.eu/

Asia-Pacific
https://ecb.omron.com.sg/

China
https://www.ecb.omron.com.cn/

Korea
https://www.omron-ecb.co.kr/

Japan
https://www.omron.co.jp/ecb/

© OMRON Corporation 2018-2021 All Rights Reserved.
In the interest of product improvement, specifications are subject to change without notice.

Cat. No. G148-E1-03
1021(1220)