2 x 3/2-way solenoid valve, G1/8 - Series 3

Product code: 398D-E15-02

Datasheet creation date: 19/05/2026 17:01

Check the most updated document online click here



TECHNICAL DATA

Mod.	398D-E15-02
Function	1 x 3/2 NC + 1 x 3/2 NO
Flow rate (Nl/min)	700
Operating pressure	-0,9 ÷ 10
Pilot pressure	2,5 ÷ 10
Manual override	= bistable standard
Dimensions of the solenoid	No solenoid
Solenoid voltage	

Products designed for industrial applications. General terms and conditions for sale are available on www.camozzi.com.
This document contains a brief description of the products offered by Camozzi Automation at time of publication.
For more complete and up to date information about the Camozzi Automation product range, please refer to our online catalogue at https://shop.camozzi.com

2 x 3/2-way solenoid valve, G1/8 - Series 3

Product code: 398D-E15-02

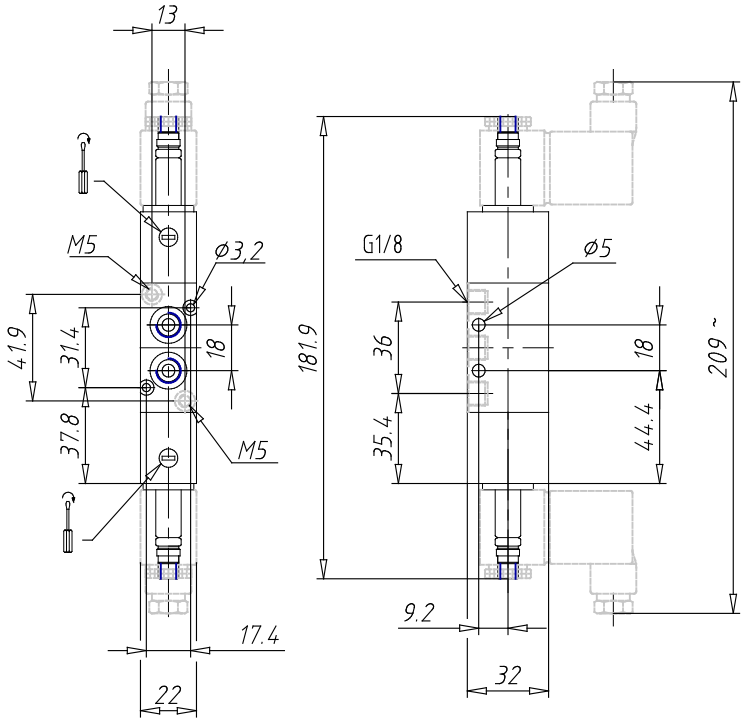

DIMENSIONS

Mod.	398D-E15-02
Function	1 x 3/2 NC + 1 x 3/2 NO
Flow rate (Nl/min)	700
Operating pressure	-0,9 ÷ 10
Pilot pressure	2,5 ÷ 10
Manual override	= bistable standard
Dimensions of the solenoid	No solenoid
Solenoid voltage	

Products designed for industrial applications. General terms and conditions for sale are available on www.camozzi.com.
This document contains a brief description of the products offered by Camozzi Automation at time of publication.
For more complete and up to date information about the Camozzi Automation product range, please refer to our online catalogue at https://shop.camozzi.com