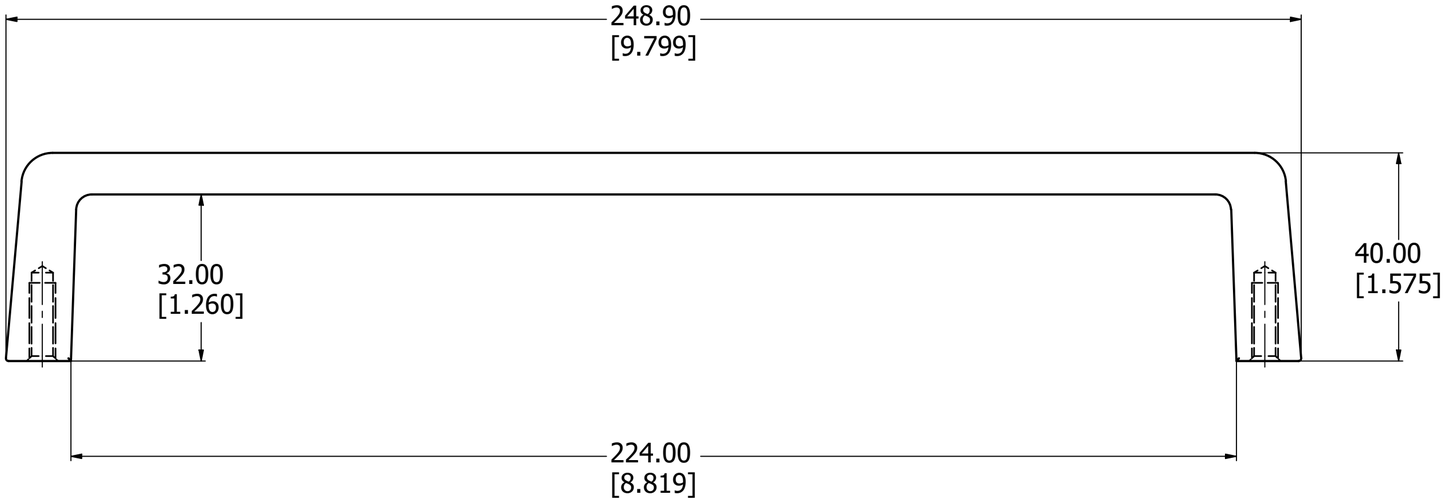

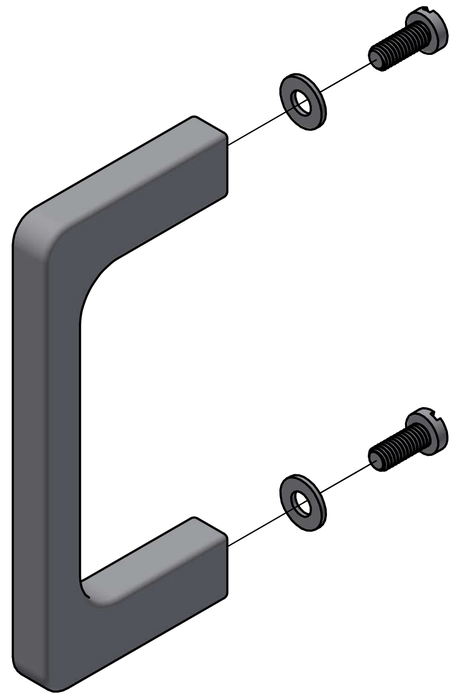

TYPICAL HANDLE ASSEMBLY

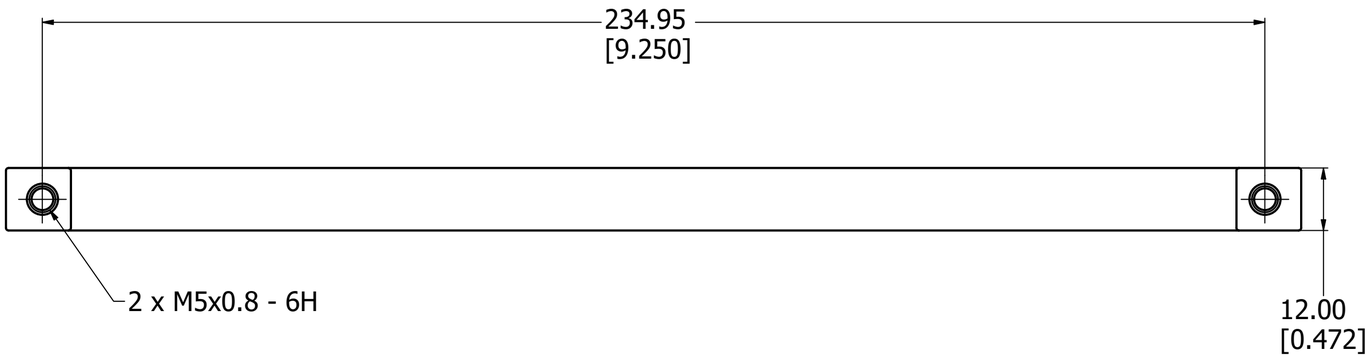

M268-5
Handle Material - Aluminum
Finish - Clear Matte Anodized Aluminum
Hardware
2 Screws - Cheesehead Slotted M5 x 12
2 Washers
**note handle sold singly

HAMMOND MANUFACTURING™

M268-5