E10437

Y-splitter

ZDO2H040MSS0005H05

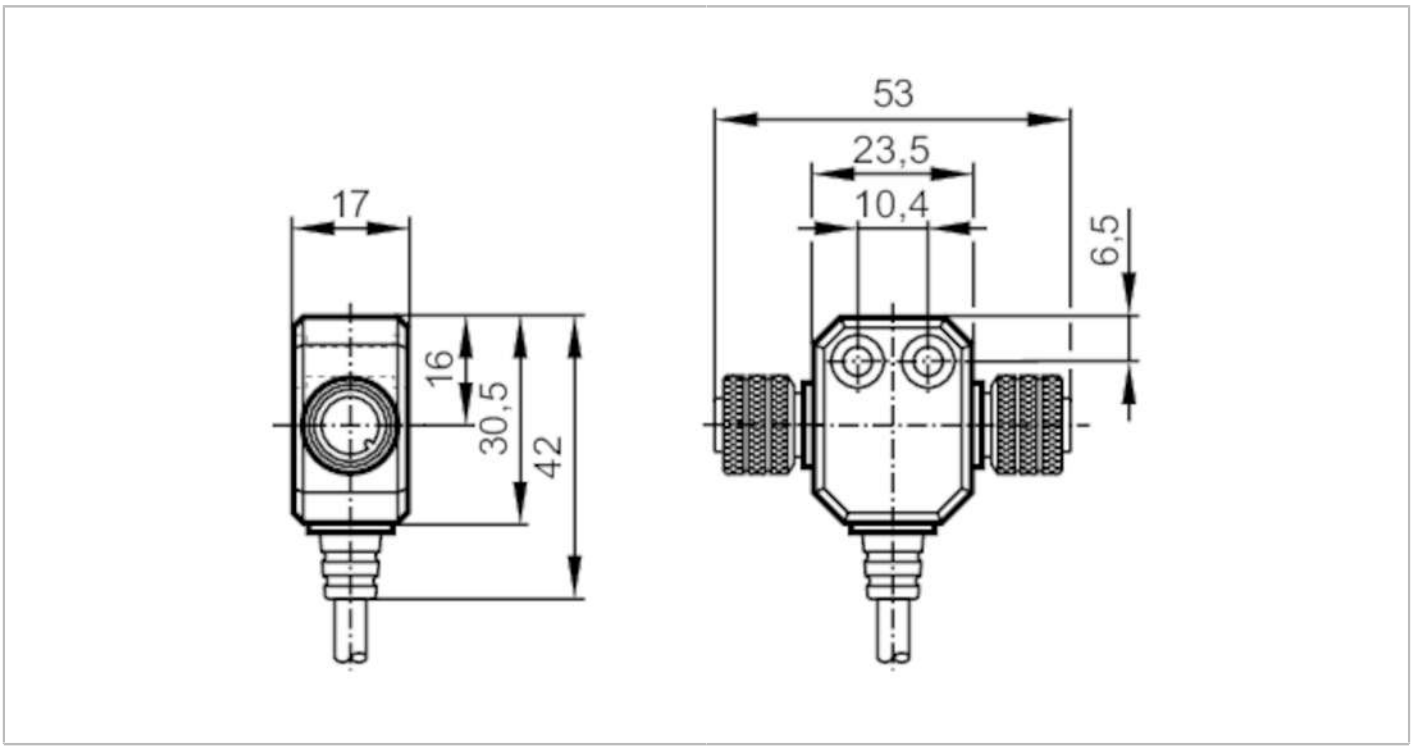

Application		
Special feature		Free from silicone; Halogen-free; Gold-plated contacts
Free from silicone		yes
Electrical data		
Operating voltage	[V]	10...55 DC
Max. current load per module/slot	[A]	4
Max. current load total	[A]	4
Operating conditions		
Ambient temperature	[°C]	-25...80
Protection		IP 67
Mechanical data		
Weight	[g]	160.7
Materials		TPU
Moulded-body material		TPU
Material nut		brass, nickel-plated
Number of ports splitter box		2
Connector type		M12
Remarks		
Pack quantity		1 pcs.

E10437

Y-splitter

ZDO2H040MSS0005H05

Electrical connection

Cable: 5 m, PUR, Halogen-free, black, Ø 5 mm; 4 x 0.25 mm² (32 x Ø 0.1 mm)

Electrical connection - socket

Connector: 2 x M12; coding: A; Moulded body: TPU; Locking: brass, nickel-plated; Contacts: gold-plated; Tightening torque: 0.5 Nm



Connection

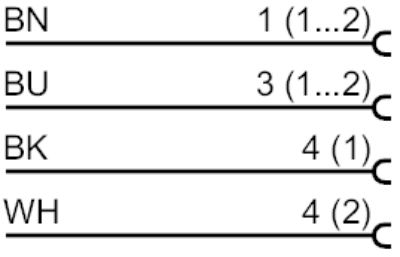

	Core colours :
BK =	black
BN =	brown
BU =	blue
WH =	white