HENGSTLER

TECHNICAL DATASHEET

Absolute Motor Feedback Encoder AD36



- For brushless servo motors
- Resolver size 15 mounting compatible
- Through hollow shaft 8 mm
- Resolution: up to 22 Bit ST + 12 Bit MT
- Wide operating temperature range (-40°C ... +120°C)
- 10,000 rpm continuous operation
- Gear based multiturn
- Interfaces: SSI, BiSS-B or BiSS-C
- Sinewave 1 Vpp
- 500kHz Bandwidth
- Special version, suitable for Vacuum on request

GENERAL

The **AD 36** is an optical absolute encoder with multiturn gear and optical scanning in Size 36 mm. Unique in its class, it offers a through hollow shaft of 8 mm. This allows a resolver compatible mounting. The mechanical concept is based on a double ball bearing mounted shaft assembly with flexible torque support. The AD 36 complements the ACURO-DRIVE family and is suitable for installation in BLDC servo motors small axle heights.

Completely digital control loop
The novel, completely digital technology enables the transition to a real digital drive system. While the well-known conventional absolute encoders for motor feedback still using analog sine signals for the feedback of motor speed and position, the AD 36 provides fully digital position data with a resolution of up to 22Bit (singleturn) and 12 Bit (multiturn) via a bidirectional synchronous interface with a variable clock rate up to 10 MHz. This corresponds to a singleturn resolution of more than half a million measuring steps. Backwards compatibility is guaranteed via the SSI interface in connection with 2048 sine - cosine periods per revolution.

Diagnostic system integrated
The AD 36 is based on an OptoAsic of the well proven technology, with diagnostic concept. The internal signal processing is controlled by a single step test. subjected to a plausibility check for each individual increment. A code-check ensures that the encoder signal reflects the detected rotation bit by bit. Even the operating temperature of the encoder can be measured with 8 bit resolution (1°C), read and monitored via warning or alarm bit. For a maximum service life of the LED, it is operated in a controlled manner and simultaneously monitored. Possible faults are announced early by warning bit.

TECHNICAL DATA
mechanical

Housing Diameter	37.5 mm
Shaft diameter	8 mm (through hollow shaft) 8 mm (hub shaft) 6 mm (hub shaft) 8 mm (tapered solid shaft 1:3)
Flange types (housing mounting)	Tether
Protection class shaft input (EN 60529)	IP40
Protection class housing (EN 60529)	IP40
Permissible axial endplay of mounting shaft (hollow / hub shaft)	± 0.5 mm
Permissible radial runout of mating shaft (hollow / hub shaft)	± 0.05 mm

TECHNICAL DATASHEET

Absolute Motor Feedback Encoder AD36

TECHNICAL DATA
mechanical (continue)

Max. speed	10,000 rpm (continuous), 12,000 rpm (short term) (higher values on request)
Starting torque typ.	≤ 1 Ncm
Moment of inertia	ca. 2.5 x 10^{-6} kgm²
Vibration resistance (DIN EN 60068-2-6)	100 m/s² (10 ... 2000 Hz) (higher value on request)
Shock resistance (DIN EN 60068-2-27)	1000 m/s² (6 ms) (higher value on request)
Operating temperature	-40 °C ... +120 °C
Storage temperature [1]	-15 °C ... +85 °C
Weight	ca. 80 g (ST) / 130 g (MT)
Connection	Cable, axial or tangential PCB-connector, 12-pole

[1] due to packaging

TECHNICAL DATA
electrical

Power supply	DC 5 V -5 % / +10 % DC 7 - 30 V
Power consumption typ.	100 mA (ST), 150 mA (MT)
Resolution Singleturn	12 - 22 Bit
Resolution Multiturn	12 Bit
Interface	SSI, Gray or Binary), BISS-B, BISS-C
Driver	Clock and Data / RS422
Incremental signals	Sine-Cosine 1 Vpp
Disc Numbers	2.048
3dB cut-off frequency	500 kHz
Absolute accuracy (typ.)	±35"
Alarm output	Alarm bit (SSI-Option), Warning and alarm bit (BiSS)

PIN ASSIGNMENT
PCB-connector, 12-pole

Color	PIN	Signal
grey	1a	$\overline{\text{Data}}$
white/green [1]	2a	A +
black [1]	3a	0 V Sensor
red/blue [1]	4a	B +
green	5a	$\overline{\text{Clock}}$
violet [1]	6a	5 V Sensor
white	1b	DC 5 V / 7-30 V
yellow	2b	Clock
grey/pink [1]	3b	B -
brown	4b	0 V (U_N)
brown/green [1]	5b	A -
pink	6b	Data

[1] Analog signals 1 Vpp on cable only available with interface SC (SSI Gray + 1 Vpp), SD (SSI Binary + 1 Vpp), BC (BiSS-B + 1 Vpp), BV (BiSS-C + 1 Vpp)

DIMENSIONAL DRAWING

Hub Shaft (F.0R)

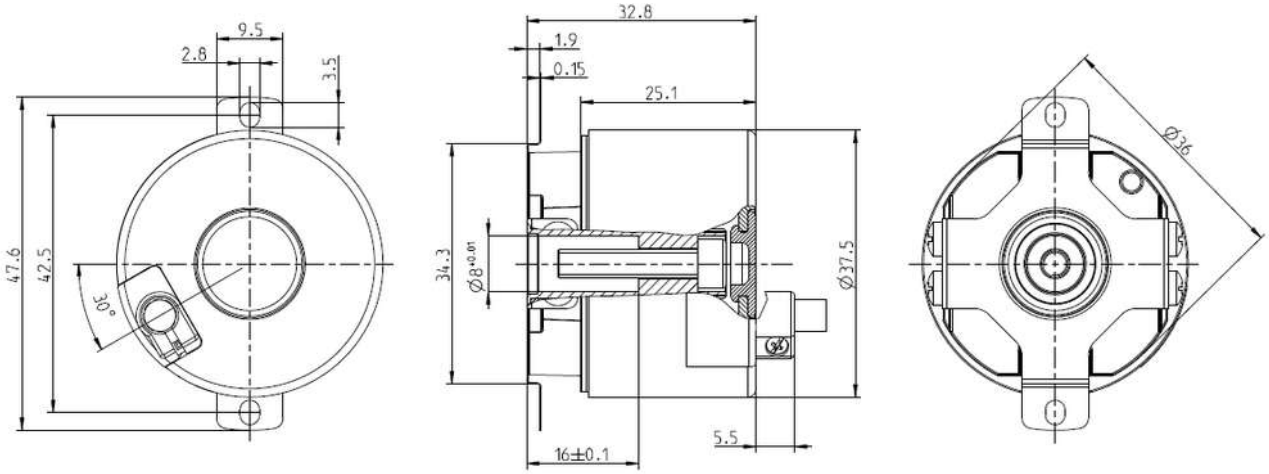

Alternative tether (U.0_)

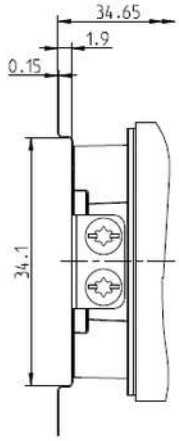

Connection dimensions example customer side

F.0R

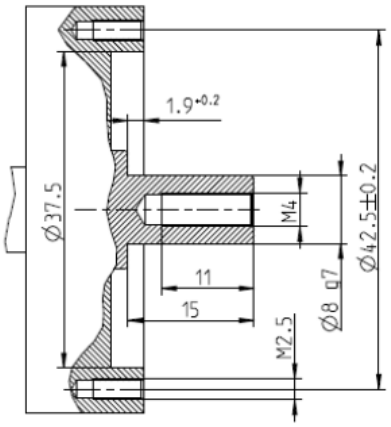

U.0R

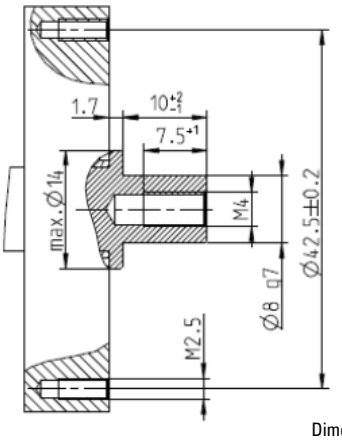

Dimension in mm

subject to errors and changes

Absolute Motor Feedback Encoder AD36

DIMENSIONAL DRAWING

Through Hollow shaft (F.0C)

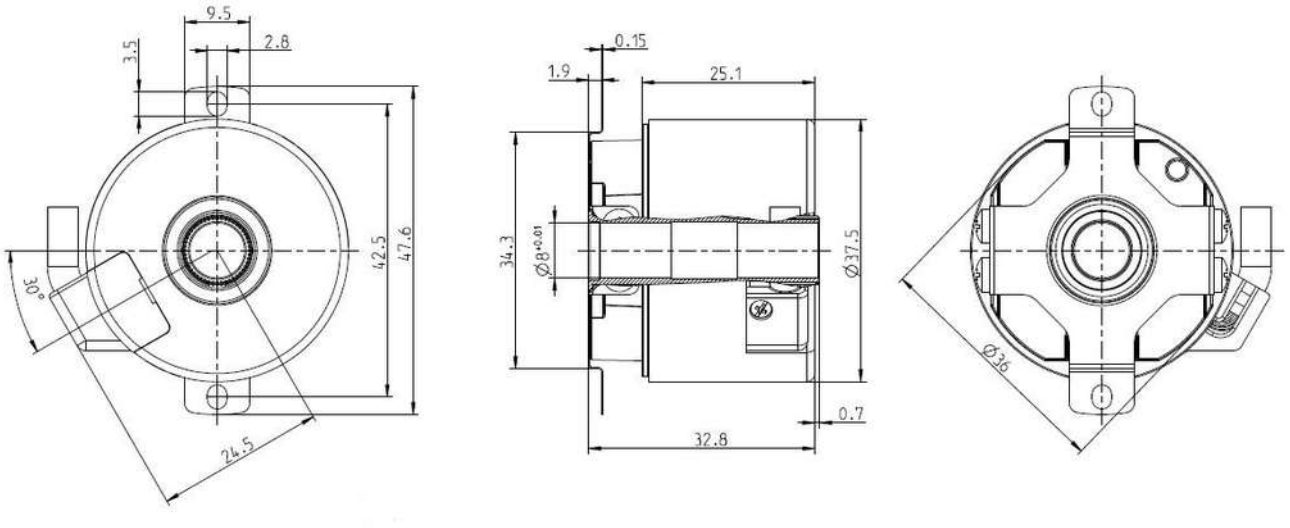

Alternative tether (U.0_)

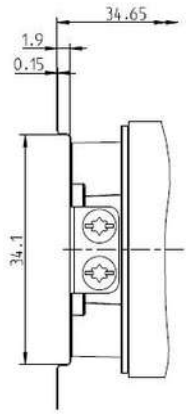

Dimension in mm

subject to errors and changes

DIMENSIONAL DRAWING

Hub Shaft (J.0G)

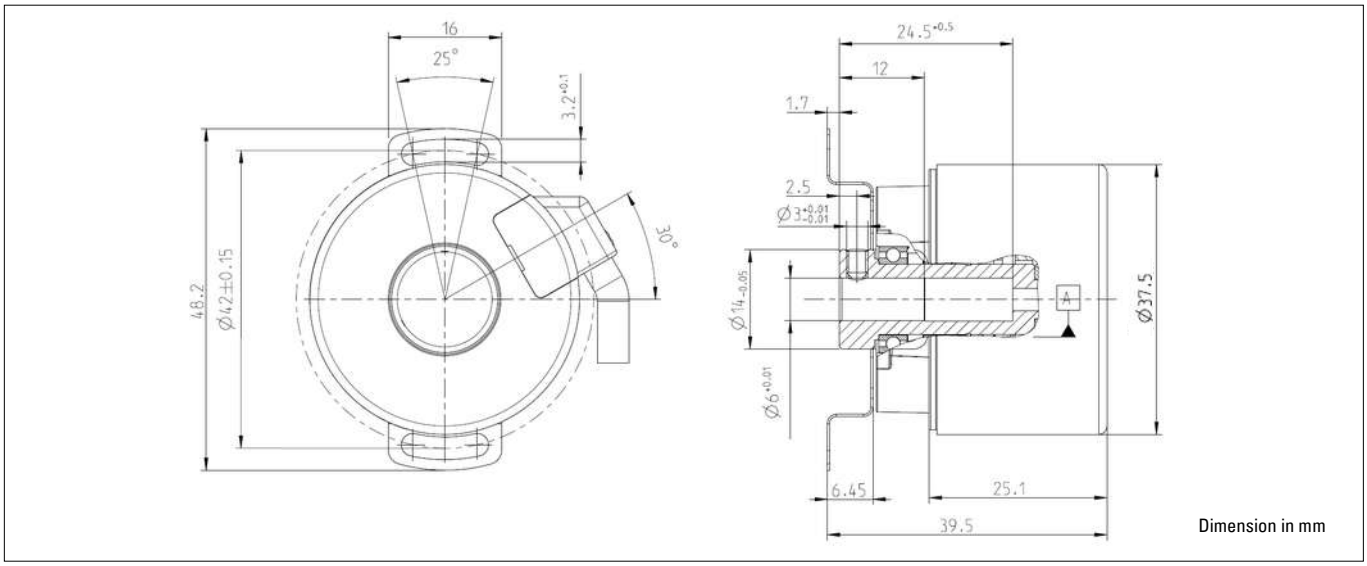

Dimension in mm

Cone Shaft 1:3 (H.0T)

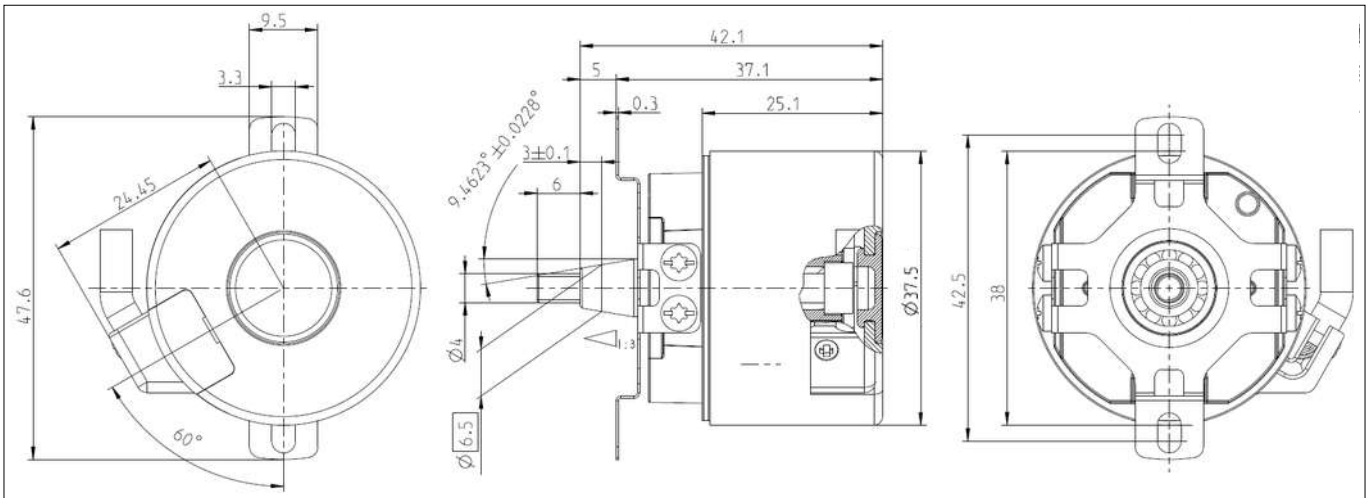

Dimensions for H.0T

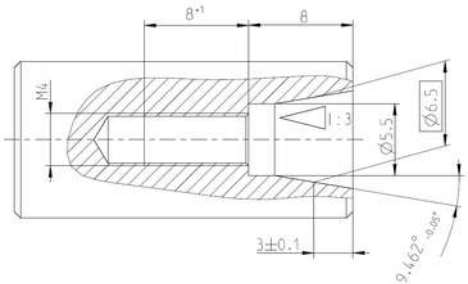

Dimension in mm

subject to errors and changes

Absolute Motor Feedback Encoder AD36

ORDERING INFORMATION

Type	Resolution	Power Voltage [1]	Flange, Protection, Shaft	Interface	Connection [3], [4]
AD36	**0012** 12 Bit ST **0013** 13 Bit ST **0014** 14 Bit ST **0017** 17 Bit ST **0019** 19 Bit ST **0022** 22 Bit ST **1212** 12 Bit MT+12 Bit ST **1213** 12 Bit MT+13 Bit ST **1214** 12 Bit MT+14 Bit ST **1217** 12 Bit MT+17 Bit ST **1219** 12 Bit MT +19 Bit ST **1222** 12 Bit MT+22 Bit ST Others available upon request	**A** DC 5 V [2] **E** DC 7-30 V	**F.0C** Spring tether, IP40, 8mm trough hollow shaft **F.0R** Spring tether, IP40, 8 mm hub shaft **U.0C** Spring tether, IP40, 8mm trough hollow shaft **U.0R** Spring tether, IP40, 8 mm hub shaft **J.0G** Spring tether, IP40, 6 mm hub shaft **H.0T** Spring tether, IP40 8 mm tapered shaft 1:3	**BI** BiSS-B **BC** BiSS-B (+SinCos 1Vpp) **BE** BiSS-C **BV** BiSS-C (+SinCos 1Vpp) **SB** SSI Binary **SD** SSI Binary (+SinCos 1Vpp) **SG** SSI Gray **SC** SSI Gray (+SinCos 1Vpp)	**0** PCB connector 12 pole with pre-assembled axial cable clip **2** PCB connector 12 pole with pre-assembled tangential cable clip **A** PCB connector with mating connector and (0.5m) cable, axial **B** PCB connector with mating connector and (0.5m) cable, tangential

[1] The encoder is designed to be connected to a SELV power supply. A connection to a DC voltage network is only permitted with the appropriate protective circuit. A corresponding EMC protective circuit is generally required for cable lengths > 30 m .
[2] With a 5V supply there is no reverse polarity protection
[3] The cable outlet does not represent strain relief, the cable must be permanently installed near the encoder.
[4] Connection „0“ and „2“ only with Interface BC, BV, SD and SC available. Interfaces always including SinCos 1Vpp

ORDERING CODE cable

The variants with cable outlet (connection A, B) are available with different cable lengths. To get your desired cable length, please put the appropriate code at the end of the order key. Other lengths or plugs at the end of the cable on request

Code	Cable length
Without Code	0,5 m
-B5	1,5 m
-D0	3 m
-F0	5 m
-K0	10 m
-P0	15 m
-U0	20 m
-V0	25 m

Example:
Cable with 3 m length: ... B - D0

Absolute Motor Feedback Encoder AD36

Accessoires

Cable Clip axial



Cable Clip tangential



Screen clamp

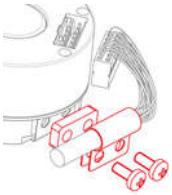

CONNECTION CABLE

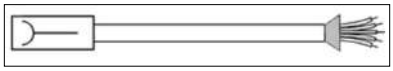

Article	Part Nr.
SSI / BiSS-B Manual	2 565 123
BiSS-C Application Note	2 547 138
cable-Clip axial for cable (Ø 4,8 mm)	E2 541 039
cable-Clip tangential for cable (Ø 4,8 mm)	E2 541 034
Screen clamp for screened cable	1 541 066

In standard encoders, the cable shield is isolated in the cable clip.
In EMC-sensitive environments, the cable shield can be attached to the encoder housing using the shield clamp. To do this, the cable shield must be uncovered, folded back over the sheath and fastened in the clamp.

Cable 6 wire (für BI, BE, SG, SB) for clip	
Length	**Part Nr.**
0,5 m	E1 541 152
1,5 m	E1 541 186
3,0 m	E1 541 138
5,0 m	E1 541 139
10,0 m	E1 541 129

Cable 12 wire (für BC, BV, SC, SD) for clip	
Length	**Part Nr.**
0,5 m	E1 541 048
1,5 m	E1 541 059
3,0 m	E1 541 061
5,0 m	E1 541 110
10,0 m	E1 541 089
15,0 m	on request

Cable 12 wire (für BC, BV, SC, SD) for screen clamp + clip	
Length	**Part Nr.**
0,5 m	E1 541 117
1,5 m	on request
3,0 m	on request
5,0 m	on request
10,0 m	on request
15,0 m	on request

* other lengths or connectors at the end of the cable on request

OVERVIEW TETHERS

Absolute Motor Feedback Encoder AD36

TETHER „F“
Ordering Code E1 541 020

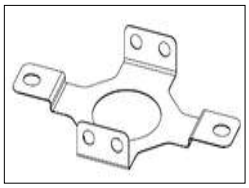

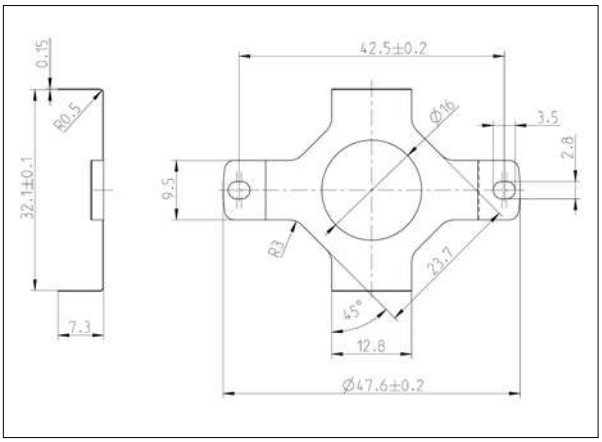

Tether „U“
Ordering Code E1 541 077

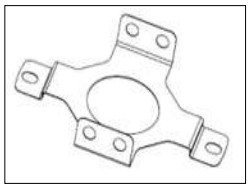

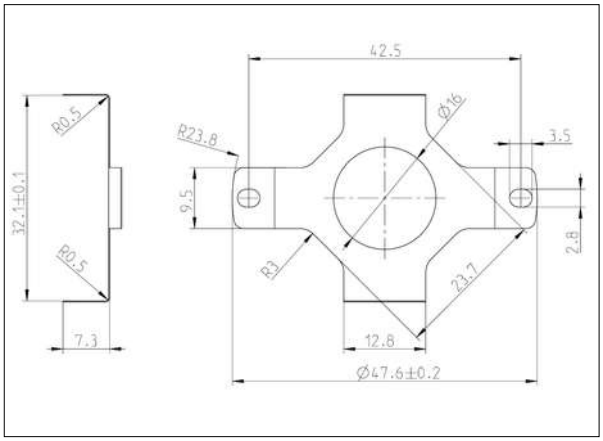

Tether „J“
Ordering Code E1 541 228

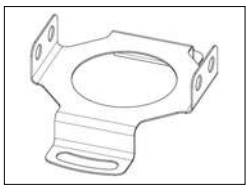

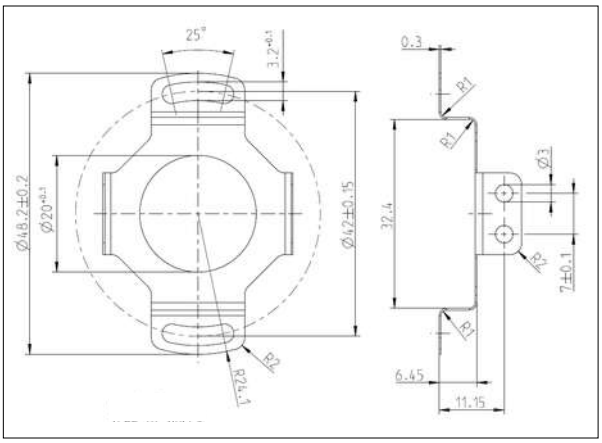

Tether „H“
Ordering Code E1 541 172

