SKF Vibracon

The chocking solution for rotating equipment

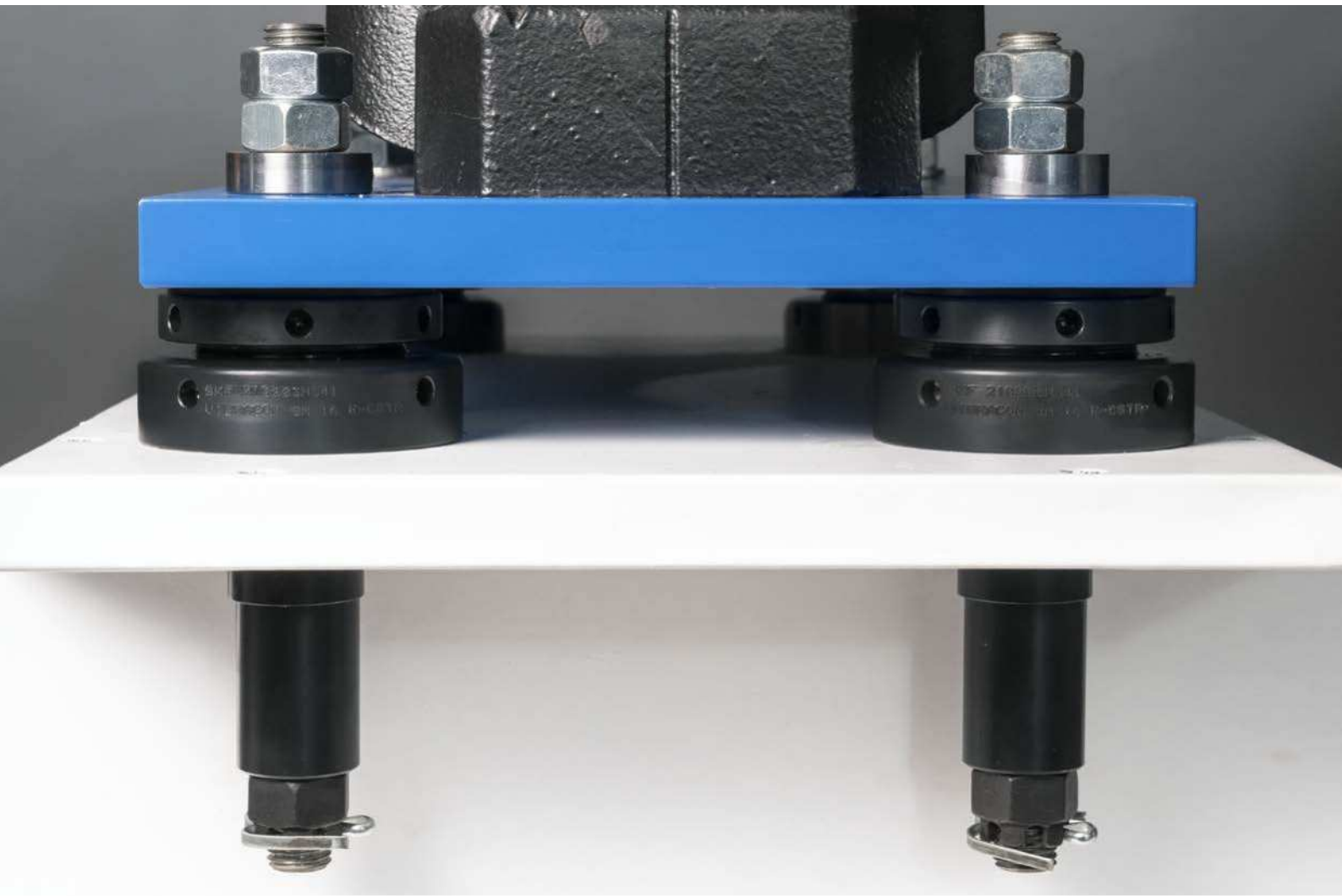









SKF Vibracon

The chocking solution which offers easy, accurate and economical installation of rotating equipment

SKF Vibracon chocks are self-leveling and provide the option to reduce profile height. They allow easy, accurate mounting of all types of rotating equipment to base frames and either steel or concrete foundations. They accommodate the angular difference (up to 4°) between machine and mounting base without the need to machine the base or install epoxy resin chocks.
The chocks eliminate soft foot- and can lower the cost of equipment foundations – whether they are designed-in or retrofitted.

SKF Vibracon chocking solutions offer you the advantages of:

- A high load capacity
- A broad adjustment range
- An optimized load path through the product
- An optimized bolt/Vibracon combination
- Reduced chock height across the entire range



Carbon steel chocks



Surface-treated chocks



Stainless steel chocks







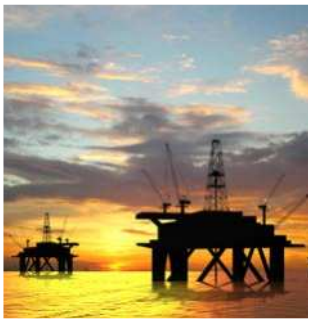







SKF Vibracon chocks have undergone rigorous laboratory and field testing. This has been performed in a variety of environments and applications, under the scrutiny of designers, production managers, OEM commissioning engineers, operators and owners. The chocks have helped many leading engineering companies to improve both technical and economic performance.

SKF Vibracon chocks can save costs and raise performance in many industries, including:

- Food & beverage
- Pulp & paper
- Oil & gas
- Marine & offshore
- Railways
- Power generation – including renewable energy
- Agriculture
- Clean room applications

As well as enhancing performance, SKF Vibracon chocks are backed by SKF's extensive maintenance organisation – and expertise in shaft alignment.

SKF Vibracon chocks raise efficiency and save cost in the installation of rotating components. This is further simplified by the availability of a broad range of specialist adjustment tools allowing technicians to alter chock height with maximum safety and comfort.

Configurations and materials are not limited to the examples shown in the product tables. Many other options are available – and are routinely used to solve mounting challenges.

Typical SKF Vibracon applications

- Gas and diesel engines
- Compressors
- Electric motors
- Gearboxes
- Generators
- Pumps and fans
- Bearing housings
- Turbines
- Other critical rotating machinery



Low profile chocks






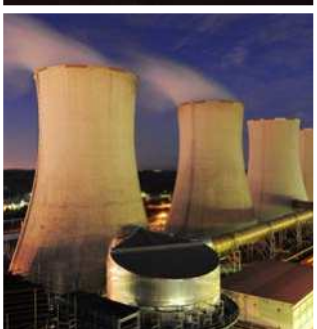




Carbon steel chocks (E-CS)

SKF Vibracon adjustable chocks can satisfy a range of technical concerns, as they are available in a number of configurations and materials. Chocks made of carbon steel are recommended for indoor use. They provide a cost-effective solution for standard applications, while offering reliable performance in environments such as on the factory floor. Applying additives at the mating surfaces provides initial protection – both before and during installation – and prevents parts from seizing when they are adjusted.



Surface treated chocks (E-CSTR)

Chocks are often installed in demanding environments, including humid and salty climates – where enhanced corrosion protection is recommended. (SKF Vibracon chocks were originally developed for marine applications.) To satisfy this need, SKF has tested a range of protective solutions, resulting in its surface-treated chocks. Each part is individually surface treated, which helps to give the chocks a consistent quality and extended performance against corrosion.



Stainless steel chocks (E-SS)

For the most demanding environments where carbon steel surface-treated chocks will not suffice, SKF has developed a range of stainless-steel chocks. Mating surfaces are treated with additives to prevent parts from seizing when adjusted. Coupled with recent performance improvements, such as increased load capacity, they are suitable but not limited to be used in industries such as oil & gas or offshore.



Low profile chocks (ELP-ASTR)

These surface treated alloy steel low profile chocks are aimed at applications with limited available chocking heights. Low profile chocks offer an economic alternative to the expensive milled chocks, shims or epoxy resins typically used for re-chocking projects or previously designed solutions. Each part is individually surface treated, which helps to give the chocks a consistent quality and extended performance against corrosion. They can be fitted easily and cost-effectively, which helps machine owners who are on a tight installation schedule.



Adjustment tools

Using SKF Vibracon chocks makes the installation of rotating components efficient and cost effective. The installation process is simplified thanks to a wide selection of adjustment tools. These tools are designed for safe, comfortable height alteration of the chocks. Benefits include:

- Specific design results in a simple but perfect fit
- Easy to use in hard-to-reach locations
- Tools available for every type and size of SKF Vibracon chock
- Surface treatment to extend lifetime
- Grip handles for added comfort



Other SKF Vibracon applications

The configurations and materials of SKF Vibracon chocks are not limited to the examples shown in the product tables. Many options are available and routinely deployed to solve mounting challenges.

Shock hardened

Chocks for the Grade A Shock (MIL-S-901D) requirements.

Customised chocks

SKF Vibracon chocks can provide a solution for most mounting challenges – even if bolt pitch is limited, or special materials are needed.

SKF Vibracon kit for resilient mounts

A one-box kit solution is available, for commonly used resilient mounts

SKF Vibracon selection tool

Selecting the correct chock for an application is not easy – but is simplified by the use of the SKF Vibracon selection tool.

The SKF Vibracon selection tool was developed to simplify the selection of the correct adjustable steel chock for mounting rotating equipment.

The selection tool determines the most suitable Vibracon chock for an application, based on three key criteria:

- Bolt size
- Available installation height (chocking height)
- Preferred material – such as carbon steel, surface treated steel or stainless steel

The product selector is available at skf.com/vibraconselector

How to select the appropriate SKF Vibracon chock

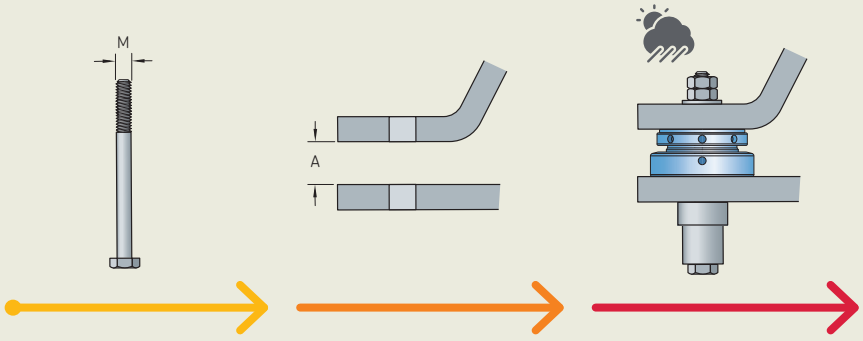

Step 1
Diameter of the foundation bolt (M)

Step 2
Available chocking height (A)

Step 3
Check environmental conditions

Vibracon selection tool
skf.com/vibraconselector
The SKF Vibracon selection tool provides a calculation tool to determine the most suitable SKF Vibracon chock for your application.

Suitable dimensions

Bolt size range		Adjustment standard range		Designation		
Standard range				Surface treated	Stainless steel	Carbon steel
Metric	*Imperial*	mm	*in.*			
M12 - M16	*1/2" - 5/8*	30 - 40	*1.18 - 1.57*	**SM 12 E-CSTR**	**SM 12 E-SS**	**SM 12 E-CS**
M16 - M20	*5/8" - 3/4"*	35 - 48	*1.38 - 1.89*	**SM 16 E-CSTR**	**SM 16 E-SS**	**SM 16 E-CS**
M20 - M24	*3/4" - 1"*	40 - 54	*1.57 - 2.13*	**SM 20 E-CSTR**	**SM 20 E-SS**	**SM 20 E-CS**
M24 - M30	*1" - 1 1/4"*	45 - 60	*1.77 - 2.36*	**SM 24 E-CSTR**	**SM 24 E-SS**	**SM 24 E-CS**
M30 - M36	*1 1/4" - 1 1/2"*	50 - 65	*1.97 - 2.56*	**SM 30 E-CSTR**	**SM 30 E-SS**	**SM 30 E-CS**
M36 - M42	*1 1/2" - 1 3/4"*	55 - 70	*2.17 - 2.76*	**SM 36 E-CSTR**	**SM 36 E-SS**	**SM 36 E-CS**
M42 - M48	*1 3/4" - 2"*	60 - 75	*2.36 - 2.95*	**SM 42 E-CSTR**	**SM 42 E-SS**	**SM 42 E-CS**
M48 - M56	*2" - 2 1/4"*	70 - 89	*2.76 - 3.50*	**SM 48 E-CSTR**	**SM 48 E-SS**	**SM 48 E-CS**
M56 - M64	*2 1/4" - 2 1/2"*	75 - 94	*2.95 - 3.70*	**SM 56 E-CSTR**	**SM 56 E-SS**	**SM 56 E-CS**
M64 - M68	*2 1/2" - 2 3/4"*	80 - 99	*3.15 - 3.90*	**SM 64 E-CSTR**	**SM 64 E-SS**	**SM 64 E-CS**

Low profile range				Surface treated	Adjustment tools	
					Designation	Suitable for:
M16 - M20	*5/8" - 3/4*	25 - 37	*0.98 - 1.46*	**SM 16 ELP-ASTR**	**SMAT 006**	SM 12 E – SM 16 E
M20 - M24	*3/4" - 1"*	25 - 37	*0.98 - 1.46*	**SM 20 ELP-ASTR**	**SMAT 008**	SM 20 E – SM 36 E
M24 - M30	*1" - 1 1/4"*	25 - 37	*0.98 - 1.46*	**SM 24 ELP-ASTR**	**SMAT 010**	SM 42 E – SM 64 E
M30 - M36	*1 1/4" - 1 1/2"*	25 - 37	*0.98 - 1.46*	**SM 30 ELP-ASTR**	**SMAT 006 LP-3**	SM 16 ELP – SM 20 ELP
M36 - M42	*1 1/2" - 1 3/4"*	30 - 42	*1.18 - 1.65*	**SM 36 ELP-ASTR**	**SMAT 006 LP-4**	SM 24 ELP – SM 42 ELP
M42 - M48	*1 3/4" - 2"*	35 - 47	*1.38 - 1.85*	**SM 42 ELP-ASTR**		

Technical data

Designation suffix:
CS = Carbon steel
CSTR = Carbon steel surface treated
SS = Stainless steel

Designation example: SM 24 E-CSTR

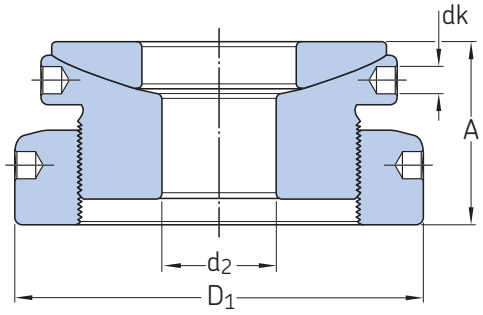

Bolt size range		Bolt hole diameter		Maximum height		Engineering height		Minimum height		Minimum reduced height [1]		Maximum extended height [2]		Outer diameter		Key hole diameter		Pitch of thread		Product type
Metric	*Imperial*	d_2		A		A		A		A		A		D_1		dk				
		mm	*in.*	mm	*in.*	mm	*in.*	mm	*in.*	mm	*in.*	mm	*in.*	mm	*in.*	mm	*in.*	mm	*in.*	
M12-M16	*1/2"-5/8"*	18	*0.71*	40	*1.57*	34	*1.34*	30	*1.18*	24	*0.94*	65	*2.56*	65	*2.56*	6	*0.24*	1.5	*0.06*	**SM 12 E**
M16-M20	*5/8"-3/4"*	22	*0.87*	48	*1.89*	40	*1.57*	35	*1.38*	26	*1.02*	80	*3.15*	80	*3.15*	6	*0.24*	1.5	*0.06*	**SM 16 E**
M20-M24	*3/4"-1"*	27	*1.06*	54	*2.13*	45	*1.77*	40	*1.57*	30	*1.18*	100	*3.94*	100	*3.94*	8	*0.31*	1.5	*0.06*	**SM 20 E**
M24-M30	*1"-1 1/4"*	33	*1.30*	60	*2.36*	51	*2.01*	45	*1.77*	35	*1.38*	120	*4.72*	120	*4.72*	8	*0.31*	2	*0.08*	**SM 24 E**
M30-M36	*1 1/4"-1 1/2"*	39	*1.54*	65	*2,56*	56	*2.20*	50	*1.97*	40	*1,57*	140	*5.51*	140	*5.51*	8	*0.31*	2	*0.08*	**SM 30 E**
M36-M42	*1 1/2"-1 3/4"*	45	*1.77*	70	*2,76*	61	*2,40*	55	*2.17*	45	*1,77*	160	*6.30*	160	*6.30*	8	*0.31*	2	*0.08*	**SM 36 E**
M42-M48	*1 3/4"-2"*	52	*2.05*	75	*2,95*	66	*2,60*	60	*2.36*	50	*1,97*	190	*7.48*	190	*7.48*	10	*0.39*	2	*0.08*	**SM 42 E**
M48-M56	*2"-2 1/4"*	60	*2.36*	89	*3,50*	77	*3,03*	70	*2,76*	59	*2,32*	210	*8.27*	210	*8.27*	10	*0.39*	3	*0.12*	**SM 48 E**
M56-M64	*2 1/4"-2 1/2"*	68	*2.68*	94	*3,70*	82	*3,23*	75	*2,95*	64	*2,52*	230	*9.06*	230	*9.06*	10	*0.39*	3	*0.12*	**SM 56 E**
M64-M68	*2 1/2"-2 3/4*	78	*3.07*	99	*3,90*	87	*3,43*	80	*3,15*	69	*2,72*	260	*10.24*	260	*10.24*	10	*0.39*	3	*0.12*	**SM 64 E**

[1] The minimum height of the product can be reduced on a lathe if required.
[2] The maximum height of the product can be extended with the use of an additonal bottom ring.

Bolt size range		Bolt	Torque	Bolt	Torque	Bolt	Torque	Bolt	Torque	Proof load [3]		Machine load [4]		Weight		Designation			
Metric	*Imperial*															Suffixes			
		Metr.	Nm	Metr.	Nm	*Imp.*	*lbf.ft*	*Imp.*	*lbf.ft*	kN	*kip*	kN	*kip*	kg	*lbs*				
M12-M16	*1/2"-5/8"*	M12	85	M16	215	*1/2"*	*65*	*5/8"*	*160*	90	*20*	15	*3.4*	0,6	*1,32*	**SM 12 E**	**-CSTR**	**-SS**	**-CS**
M16-M20	*5/8"-3/4"*	M16	215	M20	420	*5/8"*	*160*	*3/4"*	*295*	140	*31*	25	*5.6*	1,0	*2,20*	**SM 16 E**	**-CSTR**	**-SS**	**-CS**
M20-M24	*3/4"-1"*	M20	420	M24	730	*3/4"*	*295*	*1"*	*560*	200	*45*	35	*7.9*	1,8	*3,97*	**SM 20 E**	**-CSTR**	**-SS**	**-CS**
M24-M30	*1"-1 1/4"*	M24	730	M30	1 465	*1"*	*560*	*1 1/4"*	*1 145*	325	*73*	60	*13.5*	3,0	*6,61*	**SM 24 E**	**-CSTR**	**-SS**	**-CS**
M30-M36	*1 1/4"-1 1/2"*	M30	1 465	M36	2 570	*1 1/4"*	*1 145*	*1 1/2"*	*2 000*	475	*107*	90	*20.2*	4,6	*10,14*	**SM 30 E**	**-CSTR**	**-SS**	**-CS**
M36-M42	*1 1/2"-1 3/4"*	M36	2 570	M42	4 100	*1 1/2"*	*2 000*	*1 3/4"*	*3 200*	650	*146*	120	*27.0*	6,5	*14,33*	**SM 36 E**	**-CSTR**	**-SS**	**-CS**
M42-M48	*1 3/4"-2"*	M42	4 100	M48	6 210	*1 3/4"*	*3 200*	*2"*	*4 785*	850	*191*	160	*36.0*	10,0	*22,05*	**SM 42 E**	**-CSTR**	**-SS**	**-CS**
M48-M56	*2"-2 1/4"*	M48	6 210	M56	9 660	*2"*	*4 785*	*2 1/4"*	*7 285*	1 150	*259*	200	*45.0*	14,5	*31,97*	**SM 48 E**	**-CSTR**	**-SS**	**-CS**
M56-M64	*2 1/4"-2 1/2"*	M56	9 660	M64	14 400	*2 1/4"*	*7 285*	*2 1/2"*	*10 550*	1 500	*337*	260	*58.5*	18,7	*41,23*	**SM 56 E**	**-CSTR**	**-SS**	**-CS**
M64-M68	*2 1/2"-2 3/4*	M64	14 400	M68	17 900	*2 1/2"*	*10 550*	*2 3/4"*	*15 475*	2 000	*450*	380	*85.5*	25,1	*55,34*	**SM 64 E**	**-CSTR**	**-SS**	**-CS**

Calculations are valid for bolts with usual thread, material grade 8.8, yield strength > 640 MPa (*ASTM A193 Grade B7, yield strength > 105 ksi*), oil lubricated thread courses and nut mating surfaces without slide additives

[3] Recommended maximum load on the SKF Vibracon corresponding with the proof load of the recommended maximum metric bolt size.
[4] Sum of the weight of the component and the dynamic forces operating on the SKF Vibracon in the maximum adjusted position at the heaviest loaded position and multiplied by a safety factor.

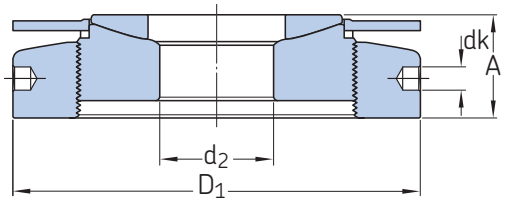

Designation suffix

ASTR = Alloy steel surface treated

Designation example: SM 24 ELP-ASTR

Bolt size range		**Bore hole diameter**		**Maximum height**		**Engineering height**		**Minimum height**		**Minimum reduced height** [1]		**Maximum extended height** [2]		**Diameter**		**Key holes**		**Pitch of thread**		**Product type**
Metric	*Imperial*	d_2		A		A		A		A		A		D_1		dk				
		mm	*in.*	mm	*in.*	mm	*in.*	mm	*in.*	mm	*in.*	mm	*in.*	mm	*in.*	mm	*in.*	mm	*in.*	
M16 - M20	*5/8"-3/4"*	22	*0.87*	37	*1.46*	30	*1.18*	25	*0.98*	17	*0.67*	80	*3.15*	80	*3.15*	6	*0.24*	1.5	*0.06*	**SM 16 ELP**
M20 - M24	*3/4"-1"*	27	*1.06*	37	*1.46*	30	*1.18*	25	*0.98*	17	*0.67*	100	*3.94*	100	*3.94*	6	*0.24*	1.5	*0.06*	**SM 20 ELP**
M24 - M30	*1"-1 1/4"*	33	*1.30*	37	*1.46*	30	*1.18*	25	*0.98*	17	*0.67*	120	*4.72*	120	*4.72*	6	*0.24*	2	*0.08*	**SM 24 ELP**
M30 - M36	*1 1/4"-1 1/2"*	39	*1.54*	37	*1.46*	30	*1.18*	25	*0.98*	17	*0.67*	140	*5.51*	140	*5.51*	6	*0.24*	2	*0.08*	**SM 30 ELP**
M36 - M42	*1 1/2"-1 3/4"*	45	*1.77*	42	*1.65*	35	*1.38*	30	*1.18*	22	*0.87*	160	*6.30*	160	*6.30*	6	*0.24*	2	*0.08*	**SM 36 ELP**
M42 - M48	*1 3/4"-2"*	52	*2.05*	47	*1.85*	40	*1.57*	35	*1.38*	27	*1.06*	190	*7.48*	190	*7.48*	6	*0.24*	2	*0.08*	**SM 42 ELP**

[1] The minimum height of the product can be reduced on a lathe if required.
[2] The maximum height of the product can be extended with the use of an additonal bottom ring.

Bolt size range		**Bolt**	**Torque**	**Bolt**	**Torque**	**Bolt**	**Torque**	**Bolt**	**Torque**	**Proof load** [3]		**Machine load** [4]		**Weight**		**Designation** incl. suffix
Metric	*Imperial*															
		Metric	Nm	Metric	Nm	*Imp.*	*lbf.ft*	*Imp.*	*lbf.ft*	kN	*kip*	kN	*kip*	kg	*lbs*	
M16 - M20	*5/8"-3/4"*	M16	215	M20	420	*5/8"*	*160*	*3/4"*	*295*	140	*31*	25	*5.6*	0,8	*1,76*	**SM 16 ELP-ASTR**
M20 - M24	*3/4"-1"*	M20	420	M24	730	*3/4"*	*295*	*1"*	*560*	200	*45*	35	*7.9*	1,2	*2,65*	**SM 20 ELP-ASTR**
M24 - M30	*1"-1 1/4"*	M24	730	M30	1 465	*1"*	*560*	*1 1/4"*	*1 145*	325	*73*	60	*13.5*	1,8	*3,97*	**SM 24 ELP-ASTR**
M30 - M36	*1 1/4"-1 1/2"*	M30	1 465	M36	2 570	*1 1/4"*	*1 145*	*1 1/2"*	*2 000*	475	*107*	90	*20.2*	2,4	*5,29*	**SM 30 ELP-ASTR**
M36 - M42	*1 1/2"-1 3/4"*	M36	2 570	M42	4 100	*1 1/2"*	*2 000*	*1 3/4"*	*3 200*	650	*146*	120	*27.0*	3,8	*8,38*	**SM 36 ELP-ASTR**
M42 - M48	*1 3/4"-2"*	M42	4 100	M48	6 210	*1 3/4"*	*3 200*	*2"*	*4 785*	850	*191*	160	*36.0*	6,4	*14,12*	**SM 42 ELP-ASTR**

Calculations are valid for bolts with usual thread, material grade 8.8, yield strength > 640 MPa (*ASTM A193 Grade B7, yield strength > 105 ksi*), oil lubricated thread courses and nut mating surfaces without slide additives.

[3] Recommended maximum load on the SKF Vibracon corresponding with the proof load of the recommended maximum metric bolt size.
[4] Sum of the weight of the component and the dynamic forces operating on the SKF Vibracon in the maximum adjusted position at the heaviest loaded position and multiplied by a safety factor.

Technical data can be subject to changes without prior notice

Also available from SKF



Spherical washers

Avoid bending of the foundation bolt

Spherical washers from SKF are designed to create an exact, parallel plane between the bolt head and the face of the nut. These washers automatically adjust and compensate for the angular deviation between the planes and prevent the bolt from bending.

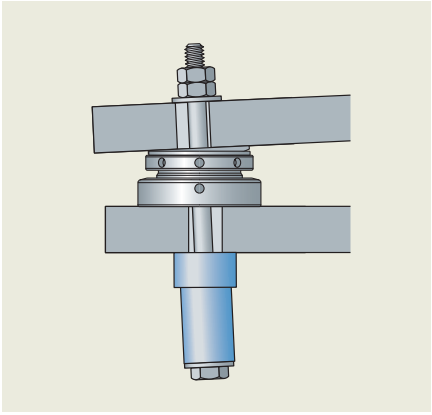

Advantages of using spherical washers:

- Automatically compensates for angular errors
- Evenly distributed bolt tension
- Reduces bolt fatigue from bending bolts
- Improved bolt stretch possible due to increased clamping length
- Surface treated for protection in humid and harsh environments
- Available in standard and low-profile (LP) versions

Alignment tools

Shaft misalignment is a major cause of rotating machinery breakdown

Accurate alignment – using specialist tools – helps to overcome the problem, as well as reducing unplanned stops and preventing lost production. This can help to extend machine lifetime. In today's demanding environment of cost reduction and asset optimisation, the need for accurate alignment is greater than ever.



SKF offers a wide variety of shaft alignment equipment, backed up by extensive maintenance expertise. Please visit skf.com/alignment for more information and product specifications.

skf.com | skf.com/vibracon | skf.com/mapro

® SKF and VIBRACON are registered trademarks of the SKF Group.

© SKF Group 2022
The contents of this publication are the copyright of the publisher and may not be reproduced (even extracts) unless prior written permission is granted. Every care has been taken to ensure the accuracy of the information contained in this publication but no liability can be accepted for any loss or damage whether direct, indirect or consequential arising out of the use of the information contained herein.

PUB MP/P2 19282 EN · January 2022

Certain image(s) used under license from Shutterstock.com