Bell Mounts - Type CFE





Applications

- Gensets
- Marine Engines
- Diesel Engines
- Pumps
- HVAC

The CFE range of mounts offer a low profile, easy to install design with an integral fail-safe device to provide shock and failure protection for mobile, marine or seismic stationery applications.

When the rubber works in shear and compression, it provides large static deflections, low natural frequencies (to 8 hz) and high isolation.

Our CFE range is designed with a fail-safe function making it an ideal solution for applications where safety is paramount

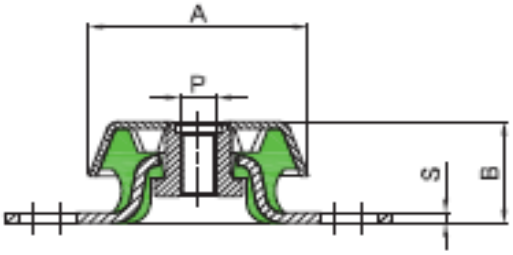

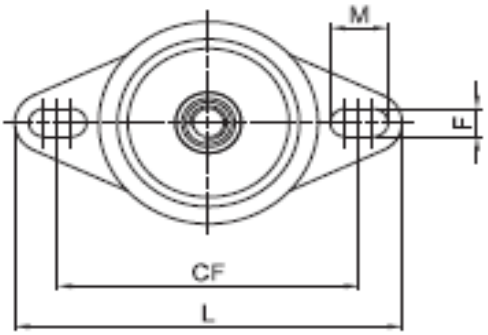

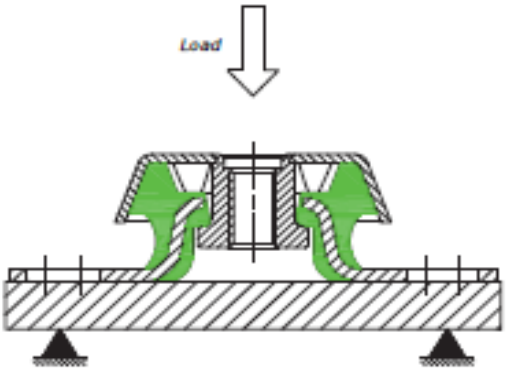

RS Ref:	Fibet Ref:	Hardness (IRHD)	A (mm)	B (mm)	P (mm)	F (mm)	CF (mm)	L (mm)	S (mm)	Average Stiffness (daN/mm)	Maximum Load (daN)	Maximum Deflection (mm)
201-2350	CFE623112W	45	60	31	M12	8.3x16	75-90	106	3	10.0	34.0	3.4
201-2351	CFE623112K	45	60	31	M12	8.3x16	75-90	106	3	13.0	43.0	3.3
201-2352	CFE623112M	45	60	31	M12	8.3x16	75-90	106	3	16.0	53.0	3.3