Medium Duty Machine Mount - For Most Machinery

Facts

- ***Withstands loads up ta 2000 kg per machine mount***
- ***Also available in stainless steel for use in environments with especially stringent requirements***
- ***Articulated bott for inclined surfaces***

Medium Duty Machine Mount is a machine mount designed for use in applications that impose stringent safety and reliability demands on the installation and damping of light and medium duty machinery. Machine mounts are available in either zinc plated or stainless steel. The stainless steel mount is designed to meet the specific requirements imposed in humid, wet or corrosive environments within the process industry or in environments where there are stringent hygiene requirements such as in the food, drinks and pharmaceuticals industries. The zinc plated steel mount is suitable for use in less demanding environments.

The built in levelling bolt means the **Medium Duty Machine Mount** can be adjusted within a large range with considerable accuracy, allowing a 7° inclina-tion while still retaining stability.

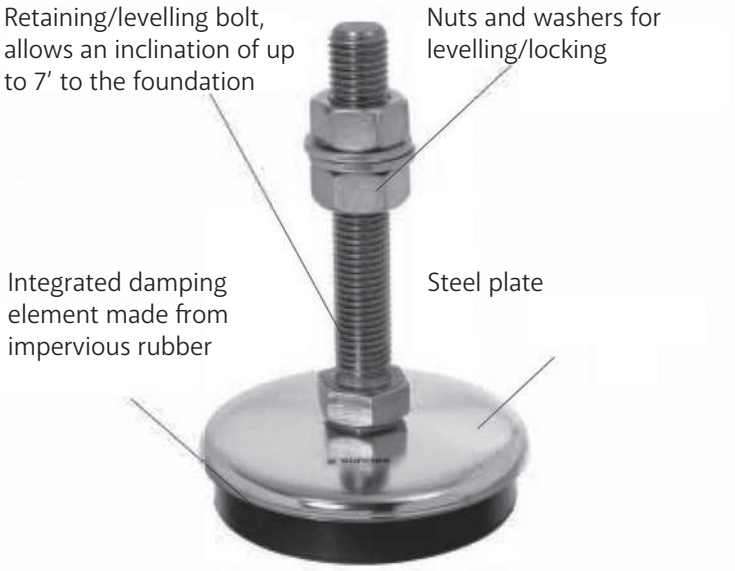

Application areas

- ***Lighter engineering machinery***
- ***Equipment cabinets***

Load range daN (kg) per mount	D mm	L mm	H mm	Levelling bolt	B mm	Part no. Stainless	Part no. Zinc plated
50-150	68	100	125	M10 x 1,50	17	10521	10525
		120	146	M12 x 1,75	19	10523	10553
			148	M16 x 2,00	24	10545	10555
			151	M20 x 2,50	30	10547	10557
100-250	68	100	125	M10 x 1,50	17	10522	10526
		120	146	M12 x 1,75	19	10524	10554
			148	M16 x 2,00	24	10546	10556
			151	M20 x 2,50	30	10548	10558
50-500	98	120	158	M12 x 1,75	19	10531	10535
				M16 x 2,00	24	10533	10538
				M20 x 2,50	30	10565	10575
		150	191	M24 x 3,00	36	10567	10577
450-1000	98	120	158	M12 x 1,75	19	10532	10536
				M16 x 2,00	24	10534	10539
				M20 x 2,50	30	10566	10576
		150	191	M24 x 3,00	36	10568	10578
900-1500	140	120	169	M12 x 1,75	19	10620	10640
				M16 x 2,00	24	10621	10641
				M20 x 2,50	30	10622	10642
		150	202	M24 x 3,00	36	10623	10643
1400-2000	140	120	169	M12 x 1,75	19	10630	10650
				M16 x 2,00	24	10631	10651
				M20 x 2,50	30	10632	10652
		150	202	M24 x 3,00	36	10633	10653

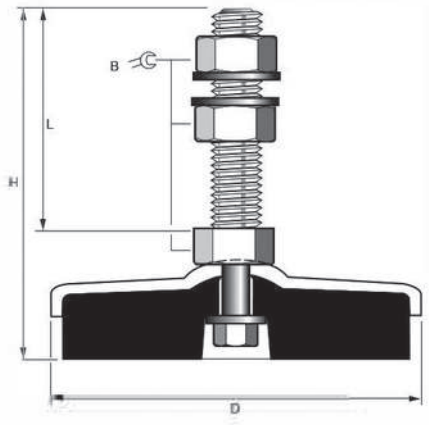

The products presented above form part of the standard range. In order to avoid injury, mounts should be fitted by authorized personnel with the requisite knowledge of the product, its installation and the user environment. We reserve the right make component, colour and design changes without prior notce. This data sheet supersedes all previously published editons.

+44 (0)1296 395400 hello@machinemounts.co.uk www.machinemounts.co.uk
Chapel Offices, Bierton, Bucks, England. HP22 5DW

Registered in England 2485587