DURAKOOL®

DX84 Series
PCB Power Relay



- Miniature PCB power relay
- Up to 12A /28VDC rating
- Industry standard style
- Cost effective

RoHS Compliant ✓

E305753

Contacts

Contact arrangement		DPST-NO (2 N/O), DPDT (2 C/O)
Contact material		AgNi 90/10, $AgSnO_2$
Max. switching voltage	AC/DC	440VAC / 125VDC
Max. switching power		2000VA
Min. switching current / voltage		100mA/12VDC
Rated load	AC1	12A 250VAC (8A, 250VAC TUV/UL)
	DC1	8A, 30VDC
Initial resistance		100mΩ, max. at 0.1A/6VDC

Coil

Rated voltage	DC	5...110V
Must release voltage	DC	≥ $0.1U_n$
Operating range of supply voltage		See table 1
Rated power consumption	DC	400mW

Insulation (EN 60664-1)

Insulation resistance	AC	≤ 1000MΩ at 500VDC, 50%RH
Dielectric strength	coil to contact	5000Vrms, 1min
	contact to contact	1000Vrms, 1min

General Data

Operating time	typ.	≤ 15ms
Release time	typ.	≤ 8ms
Electrical life	ops.	≥ 1 x 10^5
Mechanical life	ops.	≥ 1 x 10^7

Environmental

Ambient temperature	operating	-40 to 85°C
	storage	-40 to 85°C
Shock resistance	functional	100m/s²
	destructive	1000m/s²
Vibration resistance		DA 1.5mm 10-55Hz
Dimensions	L x W x H	29 x 12.7 x 15.7mm
Weight	approx.	13.5g

Ordering Code

D X 8 4 - 2 0 2 2 - 2 5 - 1 0 1 2

Series*
DX84: Standard
DX84G: Big Gap

Contact material
20: AgNi 90/10
30: $AgSnO_2$

Contact arrangement
12: DPDT (2C/O)
22: DPST-NO (2N/O)

Environmental protection
2: In cover, flux tight - IP40
3: In cover, sealed - IP67

Mounting & terminations
5: For PCB

Coil code:
See table 1

* Standard contact gap = 0.3mm
Big contact gap = 0.5mm (only available for 2N/O - option 22)

Specifications are subject to change without notice. E&OE.

See website for contact details: www.durakool.com

1

Coil Data (DC voltage 400mW) Table 1

Coil code	Nominal voltage (VDC)	Coil resistance (Ω) ±10%	Must operate voltage max. (VDC)	Must release voltage min. (VDC)
1005	5	62	3.5	0.5
1006	6	90	4.2	0.6
1009	9	202	6.3	0.9
1012	12	360	8.4	1.2
1018	18	810	12.6	1.8
1024	24	1440	16.8	2.4
1048	48	5760 ±15%	33.6	4.8
1060	60	7500 ±15%	42.0	6.0
1110	110	25200 ±15%	77.0	11.0

Dimensions mm Fig. 1

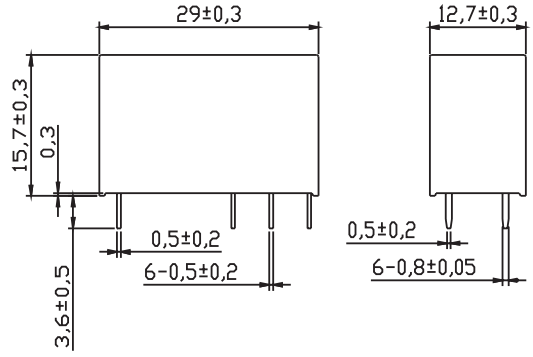

PCB Mounting Dimensions mm (bottom view) Fig. 2

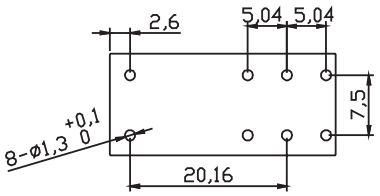

Wiring Diagrams (bottom view) Fig. 3

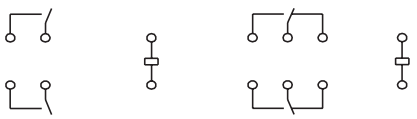

DPST-NO
DX84
DX84G

DPDT
DX84 only

Specifications are subject to change without notice. E&OE.