PENTAIR



Schroff®

MAIN CATALOG

EQUIPMENT PROTECTION SOLUTIONS | 24TH EDITION | OCTOBER 2012

6.1 - EuropacPRO

Overview 0
Cabinets 1
Wall mounted cases 2
Accessories for cabinets and wall mounted cases 3
Climate control 4
Desk-top cases 5
Subracks/ 19" chassis . . . 6
Front panels, plug-in units . . 7
Systems 8
Power supply units 9
Backplanes . . 10
Connectors, front panel component system 11
Appendix 12

Subracks – europac PRO

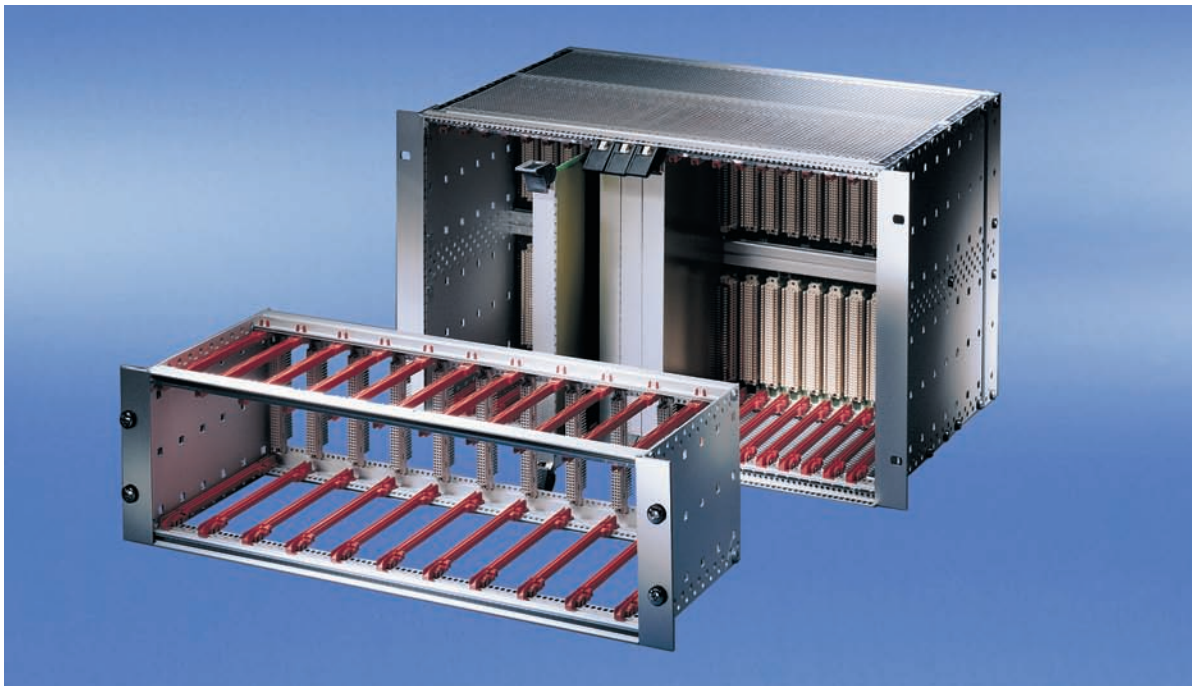

06197001

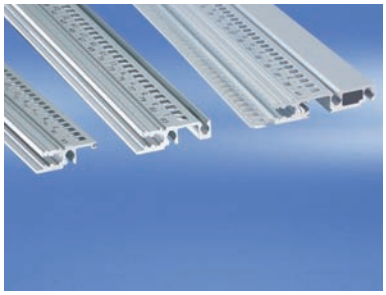

06112014

Different horizontal rails for various applications



04602002

The IEEE handles and shielded front panels are designed for the construction of CompactPCI and VME64x subrack systems



06

Sequential numbering on horizontal rails (> 28 HP) and markings on the guide rails provide quick optical positioning aids. ESD clips can be used at front or rear, to protect electronics from electrostatic discharge

Standards/certifications

- Inner and outer dimensions meet:
  IEC 60297-3-100, -101, - 102, -103, -104, -105
  IEEE 1101.1 and IEEE 1101.10/11
- Type of protection IP 20 to IEC 60529
- EMC testing to IEC 61587-3
- Shock and vibration test reports:
  German "Bahn" standards BN 411002, BN 411003;
  NF F 60002, NF F 67012
  IEC 61587-2, EN 50155
- Nuclear plants KTA 1401

EMC curve

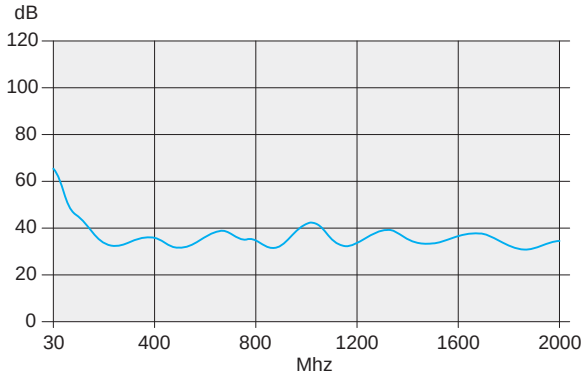

06108081

Downloads and further important information can be found on the Internet under www.schroff.biz

19" subracks

- **Kits or individual configuration**
- **One product and accessories platform for every kind of customer requirement and application**
- **Suitable for CompactPCI and VME64x insertion and extractor handles**
- **EMC shielding can easily be retrofitted if needed**
- **Shock and vibration resistant up to 5 g**
- **3D PDF or CAD 3D data available for download**

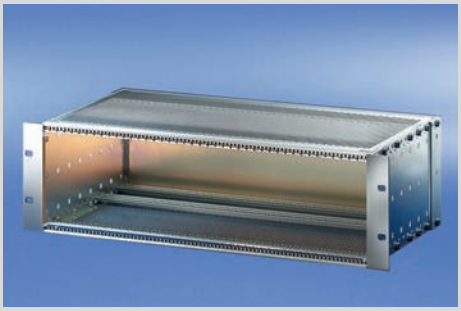

06102008

Kits

- All required parts available under one order number, some pre-fitted
- Most popular dimensions and versions available from stock
- For installed loads up to 7.5 kg, up to 11 kg and up to 15 kg
- As unshielded or shielded version
- Supplied as space-saving flat-pack

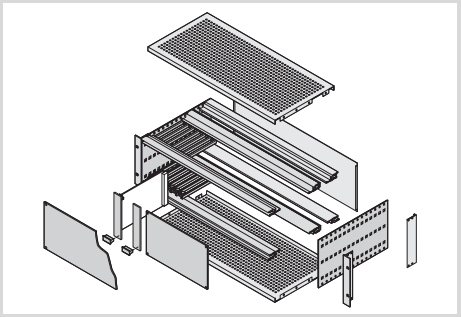

06105058

ServicePLUS individual configuration

- Single parts may individually be configured, respectively assembled on request (from quantity 1)
- Very wide range of variants in heigth, width and depth
- Guide rails for different applications
- EMC shielding material to improve EMC performance
- Interior assembly options with mounting plate or combined mounting (3 + 6 U segments)
- Other accessories and assembly kits



30407004

ServicePLUS from page 6.16

e.g. individual configuration and assembly
e.g. modification (cut-outs)
e.g. downloads (CAD drawings, user manuals, test reports)
e.g. custom solutions

www.schroff.biz/ServicePLUS

Overview . . . 6.6

Introduction . . 6.4

Kits
Light 6.8
Flexible 6.9
Heavy 6.12
CompactPCI 6.14

ServicePLUS . . 6.16

ServicePLUS configuration
Side panels 6.19
Horizontal rails, threaded inserts, perforated strips 6.27
Guide rails 6.35
Cover plates 6.42
EMC shielding . . 6.52
Interior assemblies 6.57
Assembly kits . . . 6.63

Application examples 6.69

Subracks for mobile railway applications . . 6.70

europacPRO for industrial applications . . 6.86

europacPRO for rugged applications . . 6.92

Kit, "light", unshielded, for backplane mounting

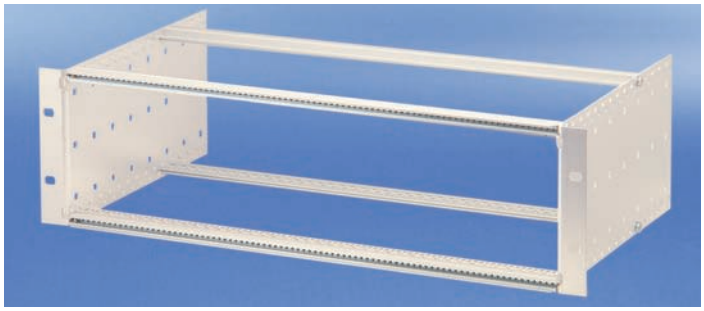

06111002

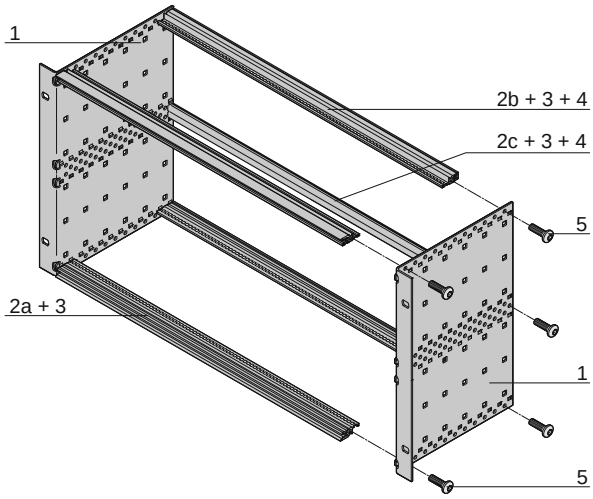

06111056

6 U

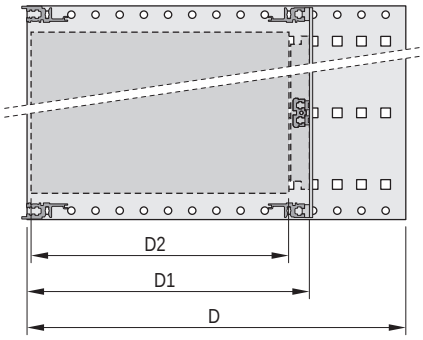

06108051

D = overall depth, D1 = insertion depth,
D2 = board depth = D1 - 15 mm

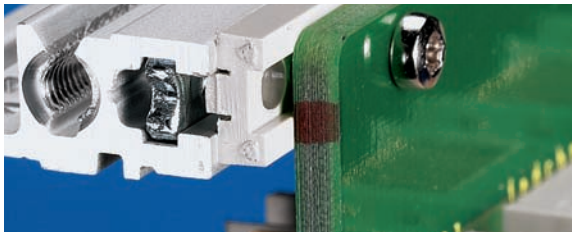

04400001

Rear horizontal rail for backplane mounting with insulation strip

- Subrack with side panel type L ("light") with firmly fixed 19" brackets
- Rear horizontal rails for backplane mounting with insulation strip
- Installed load up to 7.5 kg
- Cost-optimised

NEW

Delivery comprises (Kit)

Item	Qty 3 U	Qty 6 U	Description
1	2	2	Side panel type L, Al, 2 mm, passivated, with built-in 19" support bracket
2a	2	2	Front horizontal rail (L-KD)
2b	2	2	Rear horizontal rail (L-ST)
2c	-	1	Rear horizontal rail centre (ST)
3	4	6	Threaded insert, front and rear (pre-fitted)
4	2	4	Insulation strip (pre-fitted)
5	1	1	Fixing material kit, user manual

Order Information

Height U	Width HP	Depth D mm	Depth D1 mm	Part no.
3	84	175	175	24564-131
3	84	235	175/235	24564-132
3	84	295	175/235/295	24564-133
6	84	175	175	24564-431
6	84	235	175/235	24564-432
6	84	295	175/235/295	24564-433

Accessories

19" assembly kit (screw, washer, nut) (8 × screws, 8 × plastic washers, 8 × cage nuts)	21100-435

Guide rails (standard), ESD clips

Depth D2 mm	Qty/PU piece	Part no.
160	10	24560-351
220	10	24560-353
280	10	24560-379
ESD clips for guide rails PU 50 pieces		24560-255

Cover plates for insertion in horizontal rails (type L)

Depth D2 mm	Width HP	Qty/PU piece	Part no.
160	84	2	24561-051
220	84	2	24561-052

Note

- Subrack is not prepared for shielding
- ServicePLUS configuration from page 6.16

For further information www.schroff.biz/oneclick
oneClick search code = Part no.

ServicePLUS see page 6.16

Part number in bold face type: ready for despatch within 2 working days
Part number in normal type: ready for despatch within 10 working days

Kit, "flexible", unshielded, for connector mounting

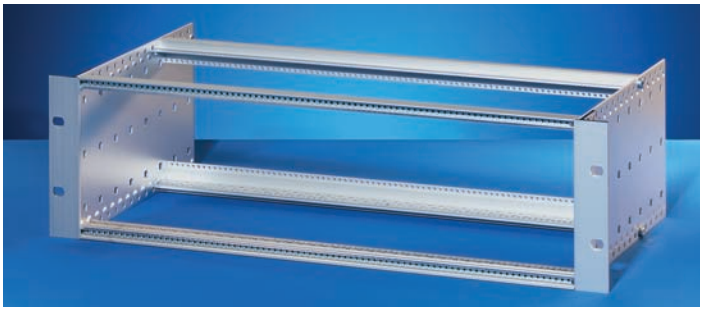

06105001

Photo: 3 U subrack

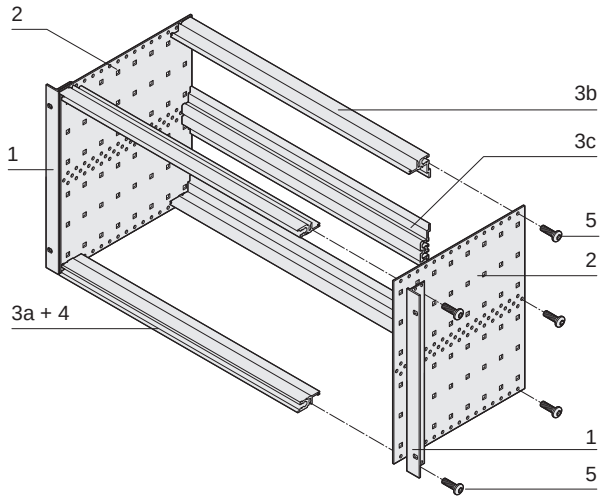

06105054

6 U

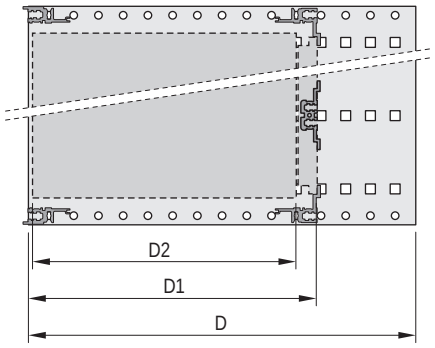

06108050

D = overall depth, D1 = insertion depth,
D2 = board depth = D1 - 15 mm

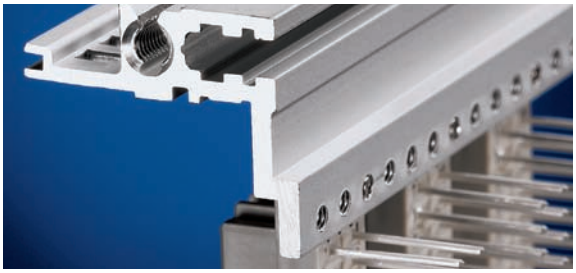

04400003

Horizontal rail to rear for connector mounting

ServicePLUS see page 6.16

- Subrack with side panel type F ("flexible"), 19" bracket is depth-adjustable
- Rear horizontal rails for connector mounting (IEC 60603-2 / DIN 41612)
- Installed load up to 11 kg

Delivery comprises (kit)

Item	Qty 3 U	Qty 6 U	Description
1	2	2	19" support bracket, Al extrusion, for EMC gasket (St, stainless)
2	2	2	Side panel type F, Al, 2 mm
3a	2	2	Front horizontal rail (L-KD)
3b	2	2	Rear horizontal rail (L-MZ) for connector mounting
3c	-	1	Centre horizontal rail (MZ)
4	2	2	Threaded insert to front (pre-fitted)
5	1	1	Fixing material kit, user manual

Order Information

Height U	Width HP	Depth D mm	Depth D1 mm	Part no.
3	84	175	175	24563-191
3	84	235	175/235	24563-192
3	84	295	175/235/295	24563-193
3	84	355	175/235/295/355	24563-194
6	84	175	175	24563-491
6	84	235	175/235	24563-492
6	84	295	175/235/295	24563-493
6	84	355	175/235/295/340	24563-494

Accessories

19" assembly kit (screw, washer, nut) (8 × screws, 8 × plastic washers, 8 × cage nuts)	21100-435

Guide rails (standard), ESD clips

Depth D2 mm	Qty/PU piece	Part no.
160	10	24560-351
220	10	24560-353
280	10	24560-379
340	10	24560-380
ESD clip for guide rails PU 50 pieces		24560-255

Cover plates for insertion in horizontal rails (type L)

Depth D2 mm	Width HP	Qty/PU piece	Part no.
160	84	2	24561-051
220	84	2	24561-052

Note

- ServicePLUS configuration from page 6.16

For further information www.schroff.biz/oneclick
oneClick search code = Part no.

Subrack kit, unshielded for connector, assembly on slide rail



06105001

Photo: 3 U subrack

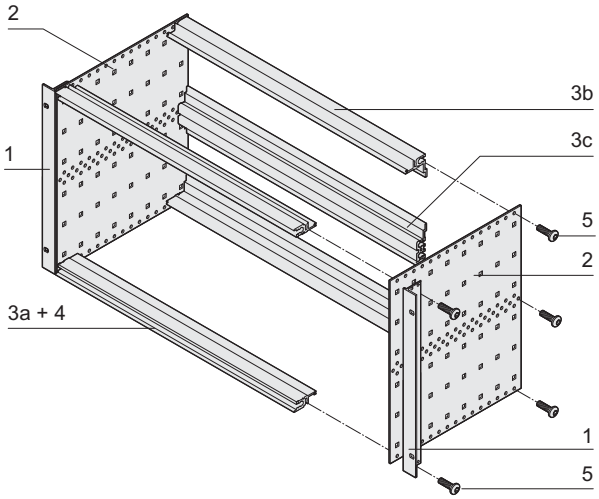

06105054

6 U

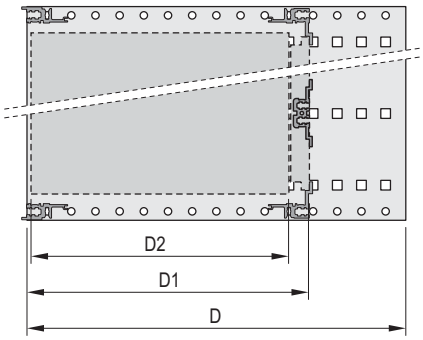

06108050

D=overall depth, D1=insertion depth,
D2=board depth = D1 - 15 mm



04400003

Rear horizontal rail for connector mounting

- Subrack can be used with slide rails
- Subrack with side panel type F ("flexible"), 19" bracket is depth-adjustable
- Horizontal rails, rear, for connector mounting (IEC 60603-2 / DIN 41612)
- Installed load up to 11 kg

Delivery includes (Kit, flat pack)

Item	Qty 3 U	Qty 6 U	Description
1	2	2	19" support bracket, Al extrusion, for EMC sealing (St, stainless)
2	2	2	Side panel type F, Al, 2 mm
3a	2	2	Front horizontal rail (L-KD)
3b	2	2	Rear horizontal rail (L-MZ) for connector mounting
3c	-	1	Center horizontal rail (MZ)
4	2	2	Threaded insert to front (pre-fitted)
5	1	1	Fixing materials kit, user manual

Order Information

Height U	Width HP	Depth D mm	Depth D1 mm	Part no.
3	84	235	175/235	24553-192
3	84	295	175/235/295	24553-193
3	84	355	175/235/295/355	24553-194
6	84	235	175/235	24553-492
6	84	295	175/235/295	24553-493
6	84	355	175/235/295/355	24553-494

Accessories

19" fixing material kit (screw, washer, nut) (8 × screws, 8 × plastic washers, 8 × cage nuts)	21100-435

Guide rails (standard), ESD clips

Depth D2 mm	Qty/PU piece	Part no.
160	10	24560-351
220	10	24560-353
280	10	24560-379

ESD clip for guide rails Spring steel, tin-plated, silver, PU 50 pieces	24560-255

Cover plates for insertion into horizontal rail type L

Depth D2 mm	Width HP	Qty/PU piece	Part no.
160	84	2	24561-051
220	84	2	24561-052

Note

- Alternative product for older europac lab and europacRational subrack series
- ServicePLUS configuration from page 6.18

Subrack kit, unshielded, flexible for backplane, assembly on slide rail



06102007

Photo: 3 U subrack

6 U

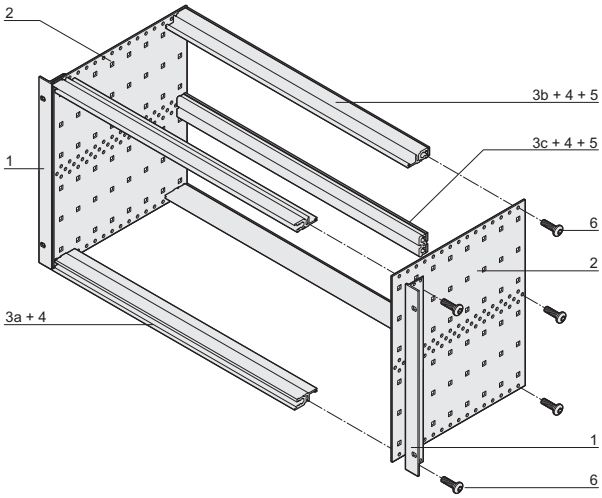

06102081

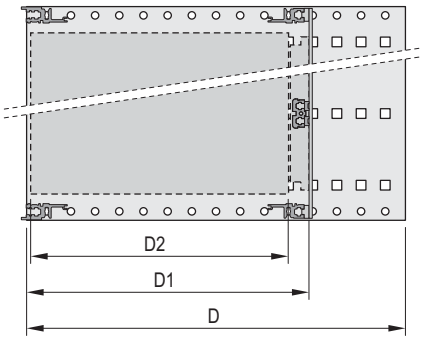

06108051

D=overall depth, D1=insertion depth,
D2=board depth = D1 - 15 mm



04400001

Rear horizontal rail for backplane mounting with insulation strip

- Subrack can be used with slide rails
- Subrack with side panel type F ("flexible"), 19" bracket is depth-adjustable
- Rear horizontal rails for backplane mounting with insulation strip
- Installed load up to 11 kg

Delivery includes (Kit, flat pack)

Item	Qty		Description
	3 U	6 U	
1	2	2	19" support bracket, Al extrusion, for EMC sealing (St, stainless)
2	2	2	Side panel type F, Al, 2 mm
3a	2	2	Front horizontal rail (L-KD)
3b	2	2	Rear horizontal rail (L-ST) for backplane mounting
3c	-	1	Rear center horizontal rail (ST)
4	4	6	Threaded inserts, front and rear (pre-fitted)
5	2	4	Insulation strip (pre-fitted)
6	1	1	Fixing materials kit, user manual

Order Information

Height	Width	Depth D	Depth D1	Part no.
U	HP	mm	mm	
3	84	235	175/235	24553-132
3	84	295	175/235/295	24553-133
3	84	355	175/235/295/355	24553-134
6	84	235	175/235	24553-432
6	84	295	175/235/295	24553-433
6	84	355	175/235/295/355	24553-434

Accessories

19" fixing material kit (screw, washer, nut) (8 × screws, 8 × plastic washers, 8 × cage nuts)	21100-435

Guide rails (standard), ESD clips

Depth D2 mm	Qty/PU piece	Part no.
160	10	24560-351
220	10	24560-353
280	10	24560-379
340	10	24560-380

ESD clip for guide rails Spring steel, tin-plated, silver, PU 50 pieces	24560-255

Cover plates for insertion into horizontal rail type L

Depth D2 mm	Width HP	Qty/PU piece	Part no.
160	84	2	24561-051
220	84	2	24561-052

Note

- Alternative product for older europac lab and europacRational subrack series
- ServicePLUS configuration from page 6.18

Kit, "flexible", unshielded, for backplane mounting

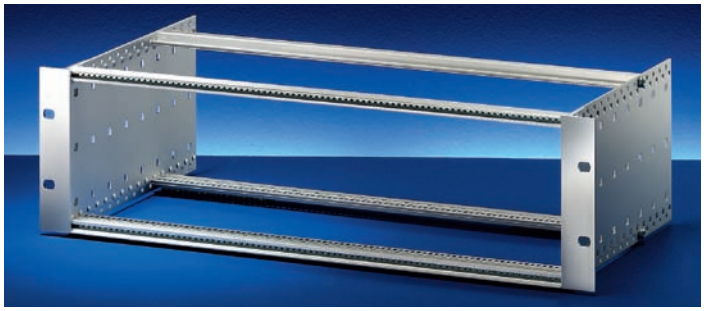

06102007

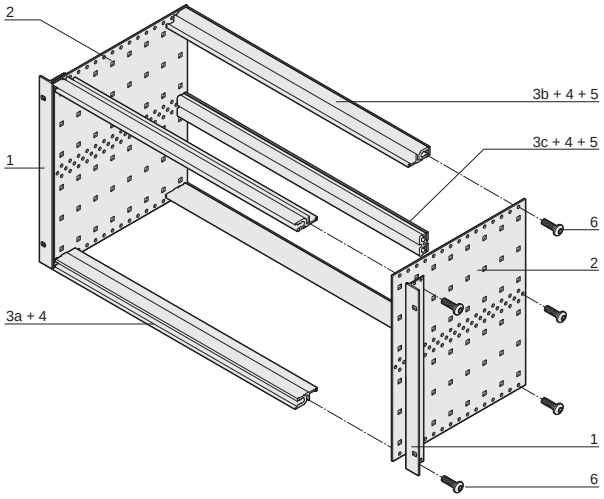

06102081

6 U

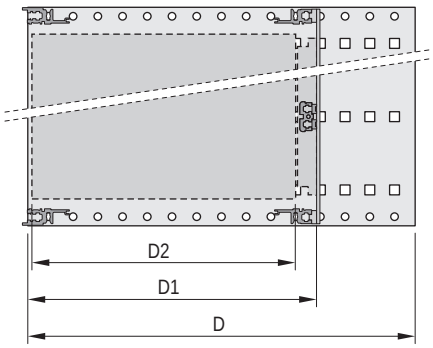

06108051

D = overall depth, D1 = insertion depth,
D2 = board depth = D1 - 15 mm



04400001

Rear horizontal rail for backplane mounting with insulation strip

- Subrack with side panel type F ("flexible"), 19" bracket is depth-adjustable
- Rear horizontal rail for backplane mounting with insulation strip
- Installed load up to 11 kg

Delivery comprises (kit)

Item	Qty 3 U	Qty 6 U	Description
1	2	2	19" support bracket, Al extrusion, for EMC stainless steel gasket
2	2	2	Side panel type F, Al, 2 mm
3a	2	2	Front horizontal rail (L-KD)
3b	2	2	Rear horizontal rail (L-ST) for backplane mounting
3c	-	1	Rear horizontal rail centre (ST)
4	4	6	Threaded insert, front and rear (pre-fitted)
5	2	4	Insulation strip (pre-fitted)
6	1	1	Fixing material kit, user manual

Order Information

Height U	Width HP	Depth D mm	Depth D1 mm	Part no.
3	84	175	175	24563-131
3	84	235	175/235	24563-132
3	84	295	175/235/295	24563-133
3	84	355	175/235/295/355	24563-134
3	84	415	175/235/295/355	24563-135
3	84	475	175/235/295/355	24563-136
6	84	175	175	24563-431
6	84	235	175/235	24563-432
6	84	295	175/235/295	24563-433
6	84	355	175/235/295/355	24563-434
6	84	415	175/235/295/355	24563-435
6	84	475	175/235/295/355	24563-436

Accessories

19" assembly kit (screw, washer, nut) (8 × screws, 8 × plastic washers, 8 × cage nuts)	21100-435

Guide rails (standard), ESD clips

Depth D2 mm	Qty/PU piece	Part no.
160	10	24560-351
220	10	24560-353
280	10	24560-379
340	10	24560-380
ESD clip for guide rails PU 50 pieces		24560-255

Cover plates for insertion in horizontal rails (type L)

Depth D2 mm	Width HP	Qty/PU piece	Part no.
160	84	2	24561-051
220	84	2	24561-052

Note

- ServicePLUS configuration from page 6.16

For further information www.schroff.biz/oneclick
oneClick search code = Part no.

ServicePLUS see page 6.16

Part number in bold face type: ready for despatch within 2 working days
Part number in normal type: ready for despatch within 10 working days

Kit, "flexible", shielded, for backplane mounting

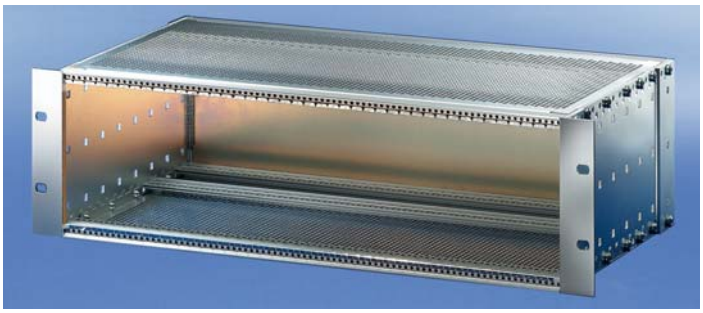

06102008

- Subrack with side panel type F ("flexible"), 19" bracket is depth-adjustable
- Rear horizontal rail for backplane mounting with insulation strip
- Shielding typically 40 dB at 1 GHz, 30 dB at 2 GHz, assuming that the front is closed with shielded front panels
- Installed load up to 11 kg

Delivery comprises ((kit))

Item	Qty 3 U	Qty 6 U	Description
1	2	2	19" support bracket for **EMC textile gasket**
2	2	2	Rear corner profile for **EMC textile gasket**
3	2	2	Side panel type F
4	2	2	Front horizontal rail (L-KD)
4 a	2	2	Rear horizontal rail (L-KD)
4 b	2	2	Rear horizontal rail (L-ST) for backplane mounting with insulation strip
4 c	-	1	Centre horizontal rail (ST)
5	6	8	Threaded insert (pre-fitted)
6	2	4	Insulation strip, fixed
7	2	2	EMC cover plate
8	1	1	EMC gasketing material (pre-fitted)
9	1	1	Rear panel
10	1	1	Fixing material kit
11	2	2	Perforated strip (pre-fitted)
12	1	1	User manual

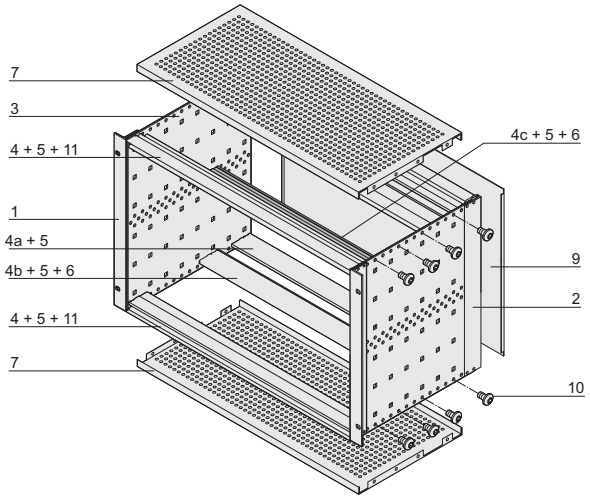

6 U

06102075

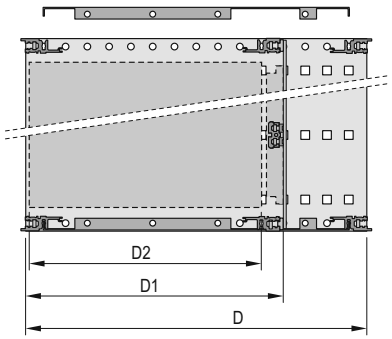

06113056

D = overall depth, D1 = insertion depth,
D2 = board depth = D1 - 15 mm

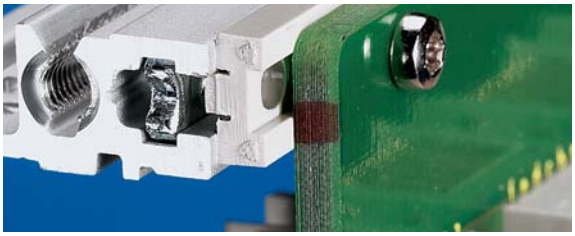

04400001

Rear horizontal rail for backplane mounting with insulation strip

Order Information

Height U	Width HP	Depth D mm	Depth D1 mm	Part no.
3	84	235	175/235	24563-142
3	84	295	175/235/295	24563-143
3	84	355	175/235/295	24563-144
3	84	415	175/235/295	24563-145
3	84	475	175/235/295	24563-146
6	84	235	175/235	24563-442
6	84	295	175/235/295	24563-443
6	84	355	175/235/295	24563-444
6	84	415	175/235/295	24563-445
6	84	475	175/235/295	24563-446

Accessories

19" assembly kit (screw, washer, nut) (8 × screws, 8 × plastic washers, 8 × cage nuts)	21100-435

Guide rails (standard), ESD clips

Depth D2 mm	Qty/PU piece	Part no.
160	10	24560-351
220	10	24560-353
280	10	24560-379
340	10	24560-380
ESD clip for guide rails PU 50 pieces		24560-255

Note

- ServicePLUS configuration from page 6.16

ServicePLUS see page 6.16

For further information www.schroff.biz/oneclick
oneClick search code = Part no.

Kit, 'heavy', unshielded, for backplane mounting

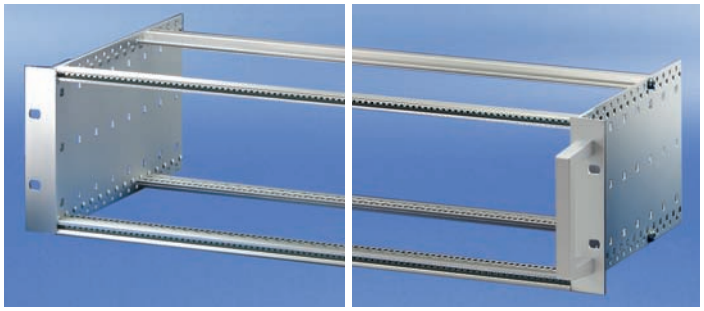

06102007 06111003

Without front handle With front handle

- Subrack with side panel type H ("heavy"), 19" bracket is firmly fixed to side panel (tox-cold welded)
- Rear horizontal rail for backplane mounting with insulation strip
- Shock and vibration resistance up to 5 g
- Installed load up to 15 kg
- Versions with/without front handles

NEW

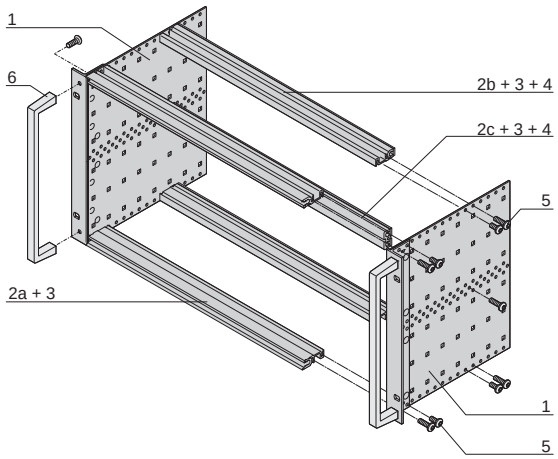

06111057

6 U

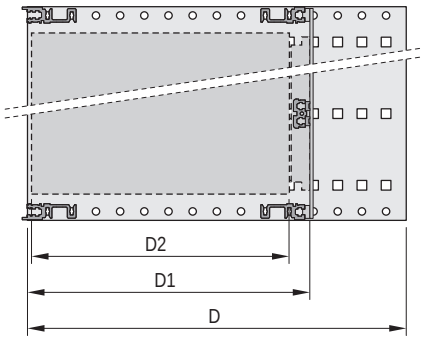

06108052

D = overall depth, D1 = insertion depth, D2 = board depth

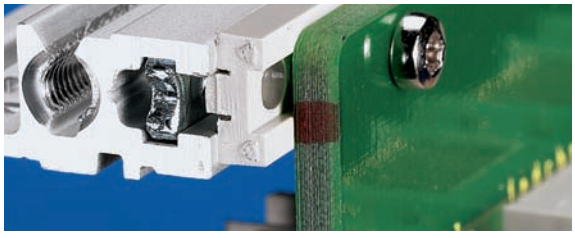

04400001

Rear horizontal rail for backplane mounting with insulation strip

Delivery comprises (Kit)

Item	Qty 3 U	Qty 6 U	Description
1	2	2	Side panel type H, Al, 2 mm, passivated, with 19" support bracket (tox-cold welded) for textile EMC gasket
2a	2	2	Front horizontal rail (H-KD)
2b	2	2	Rear horizontal rail (H-ST)
2c	-	1	Rear horizontal rail centre (H-ST)
3	4	6	Threaded insert, front and rear (pre-fitted)
4	2	4	Insulation strip (pre-fitted)
5	1	1	Fixing material kit, user manual
6	2	2	Front handle (on version with front handle only)

Order Information

Height U	Width HP	Depth D mm	Depth D1 mm	Part no. with front handle	Part no. without front handle
3	84	175	175	24567-161	24563-161
3	84	235	175/235	24567-162	24563-162
3	84	295	175/235/295	24567-163	24563-163
3	84	355	175/235/295/355	24567-164	24563-164
6	84	175	175	24567-461	24563-461
6	84	235	175/235	24567-462	24563-462
6	84	295	175/235/295	24567-463	24563-463
6	84	355	175/235/295/355	24567-464	24563-464

Accessories

19" assembly kit (screw, washer, nut) (8 × screws, 8 × plastic washers, 8 × cage nuts)	21100-435

Guide rails (standard), ESD clips

Depth D2 mm	Qty/PU piece	Part no.
160	10	24560-351
220	10	24560-353
280	10	24560-379
340	10	24560-380

ESD clip for guide rails PU 50 pieces	24560-255
Torx panhead screw , for extra bolting of the guide rails, 2.5 × 9.3, zinc-plated, PU 100 pieces; torque max. 0.2 Nm	24560-141

Cover plates for bolting to side panel

Depth D2 mm	Width HP	Qty/PU piece	Part no.
160	84	2	24560-078
220	84	2	24560-079
280	84	2	24560-080
340	84	2	24560-081

Note

- ServicePLUS configuration from page 6.16

ServicePLUS see page 6.16

Part number in bold face type: ready for despatch within 2 working days
Part number in normal type: ready for despatch within 10 working days

Kit, "heavy", shielded, for backplane mounting

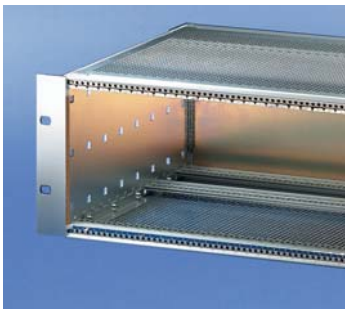

06102008

Without front handle



06111001

With front handle

- Subrack with side panel type H ("heavy"), 19" bracket is firmly fixed to side panel (tox-cold welded)
- Rear horizontal rail for backplane mounting with insulation strip
- Shielding typically 40 dB at 1 GHz, 30 dB at 2 GHz, assuming that the front is closed with sealed front panels
- Shock and vibration resistance up to 5 g
- Installed load up to 15 kg
- Versions with/without front handles

NEW

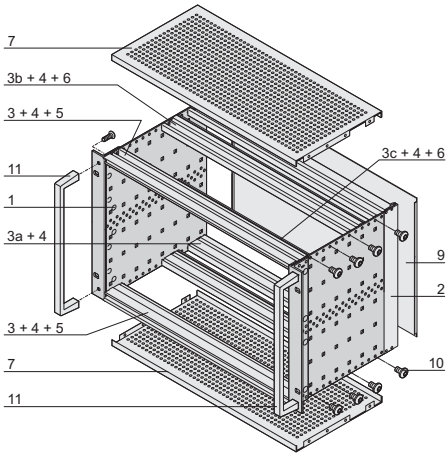

6 U

06111058

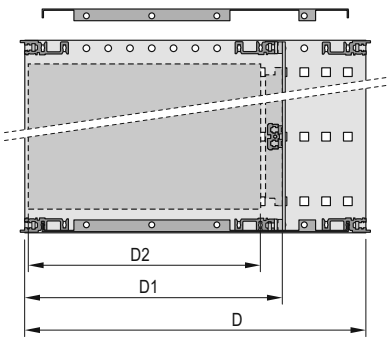

06113055

D = overall depth, D1 = insertion depth,
D2 = board depth = D1 - 15 mm

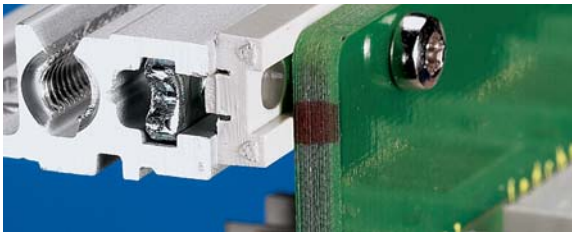

04400001

Rear horizontal rail for backplane mounting with insulation strip

Delivery comprises (Kit)

Item	Qty 3 U	Qty 6 U	Description
1	2	2	Side panel type H, Al, 2 mm, passivated, with 19" support bracket (tox-cold welded); for textile EMC gasket
2	2	2	Rear corner profile for textile EMC gasket
3	2	2	Front horizontal rail (H-KD)
3 a	2	2	Rear horizontal rail (H-KD)
3 b	2	2	Rear horizontal rail (H-ST)
3 c	-	1	Rear horizontal rail centre (ST)
4	6	8	Threaded insert (pre-fitted)
5	2	2	Perforated strip (pre-fitted)
6	2	4	Insulation strip (pre-fitted)
7	2	2	EMC cover plate
8	1	1	EMC gasketing material (pre-fitted)
9	1	1	EMC rear panel
10	1	1	Fixing material kit, user manual
11	2	2	Front handle (on version with front handle only)

Order Information

Height U	Width HP	Depth D mm	Depth D1 mm	Part no. with front handle	Part no. without front handle
3	84	235	175/235	24567-172	24563-172
3	84	295	175/235/295	24567-173	24563-173
3	84	355	175/235/295	24567-174	24563-174
6	84	235	175/235	24567-472	24563-472
6	84	295	175/235/295	24567-473	24563-473
6	84	355	175/235/295	24567-474	24563-474

Accessories

19" assembly kit (screw, washer, nut) (8 × screws, 8 × plastic washers, 8 × cage nuts)	21100-435

Guide rails (standard), ESD clips

Depth D2 mm	Qty/PU piece	Part no.
160	10	24560-351
220	10	24560-353
280	10	24560-379

ESD clip for guide rails PU 50 pieces	24560-255
Torx panhead screw , for extra bolting of the guide rails, 2.5 × 9.3, zinc-plated, PU 100 pieces; torque max. 0.2 Nm	24560-141

Note

- ServicePLUS configuration from page 6.16

ServicePLUS see page 6.16

Kit, for CompactPCI, for backplane mounting, without rear I/O, shielded

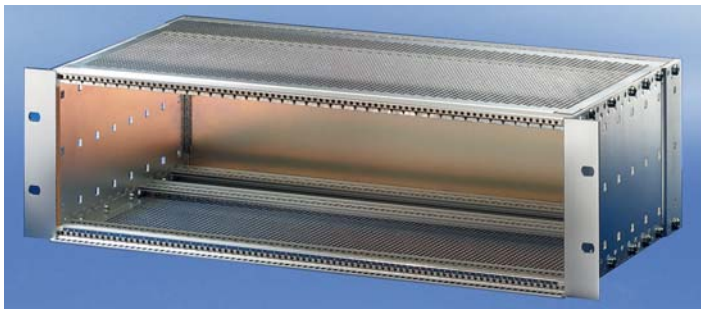

06102009

- Subrack with side panel type F ("flexible") for CompactPCI plug-in units with high insertion and withdrawal forces
- Rear horizontal rail for backplane mounting with insulation strip
- Shielding typically 40 dB at 1 GHz, 30 dB at 2 GHz, assuming that the front is covered with shielded front panels
- Installed load up to 11 kg

Delivery comprises (kit)

Item	Qty 3 U	Qty 6 U	Description
1	2	2	19" support bracket for **EMC textile gasket**
2	2	2	Rear corner profile for **EMC textile gasket**
3	2	2	Side panel type F
4	1	-	Front horizontal rail (H-KD)
4 a	1	2	Front horizontal rail IEEE (H-LD)
4 b	2	2	Rear horizontal rail (L-KD)
4 c	2	2	Rear horizontal rail (H-ST), for backplane mounting with insulation strip
4 d	-	1	Centre horizontal rail (ST)
5	6	8	Threaded insert (pre-fitted)
6	2	4	Insulation strip (pre-fitted)
7	2	2	EMC cover plate
8	1	1	EMC gasketing material (pre-fitted)
9	1	1	Rear panel
10	1	1	Fixing material kit
11	2	2	Perforated strip (pre-fitted in item 4+4a)
12	1	1	User manual

6 U

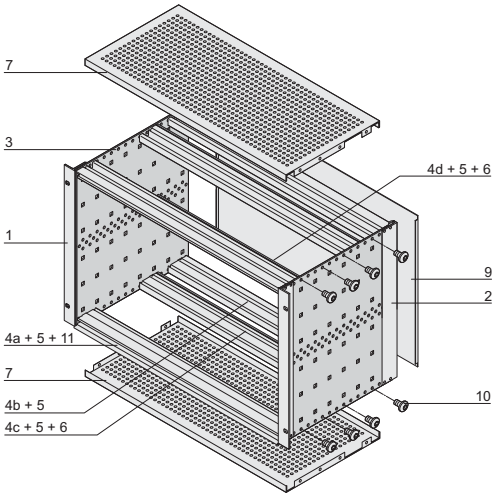

06102078

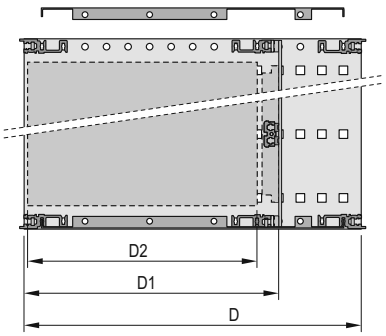

06113055

D = overall depth, D1 = insertion depth,
D2 = board depth = D1 - 15 mm

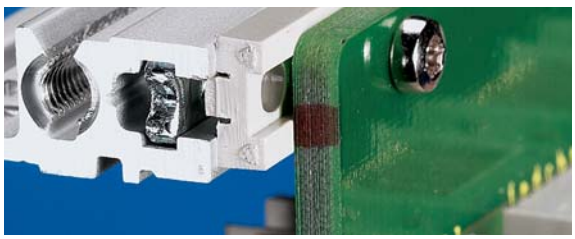

04400001

Rear horizontal rail for backplane mounting with insulation strip

Order Information

Height U	Width HP	Depth D mm	Depth D1 mm	Part no.
3	84	235	175	24563-152
6	84	235	175	24563-452

Accessories

Guide rail with coding, red 160 mm deep, PBT, UL 94 V-0, groove width 2 mm, PU 10 pieces	24560-356
Guide rail with coding, grey 160 mm deep, PBT, UL 94 V-0, groove width 2 mm, PU 10 pieces	24560-358
Guide rail with coding, green, offset 160 mm deep, PBT, UL 94 V-0, groove width 2 mm, PU 10 pieces	24560-359
ESD clip for guide rails PU 50 pieces	24560-255
ESD clip for alignment pin of CPCI/VME64x handle PU 50 pieces	24560-256
Torx panhead screw 2.5 × 9.3, zinc-plated, PU 100 pieces; torque max. 0.2 Nm	24560-141
Coding peg PC, UL 94 V-0, RAL 7035, PU 100 pieces	20817-501
19" assembly kit (screw, washer, nut) (8 × screws, 8 × plastic washers, 8 × cage nuts)	21100-435

Note

- ServicePLUS configuration from page 6.16

For further information www.schroff.biz/oneclick
oneClick search code = Part no.

ServicePLUS see page 6.16

Part number in bold face type: ready for despatch within 2 working days
Part number in normal type: ready for despatch within 10 working days

Kit, for CompactPCI, for backplane mounting, for rear I/O, shielded

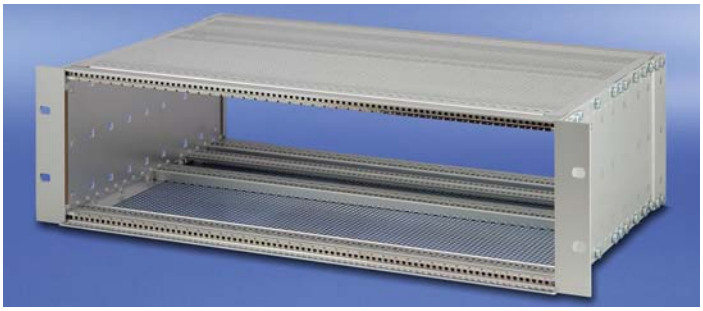

06108007

- Subrack with side panel type F ("flexible") for CompactPCI plug-in units with high insertion and withdrawal forces
- For rear I/O boards (depth 80 mm)
- Rear horizontal rail for backplane mounting with insulation strip
- Shielding typically 40 dB at 1 GHz, 30 dB at 2 GHz, assuming that the front is covered with shielded front panels
- Installed load up to 11 kg

Delivery comprises (kit)

Item	Qty		Description
	3 U	6 U	
1	2	2	19" support bracket for **EMC textile gasket**
2	2	2	Rear corner profile for **EMC textile gasket**
3	2	2	Side panel type F
4	1	-	Front horizontal rail (H-KD)
4 a	1	2	Front horizontal rail IEEE (H-LD)
4 b	2	2	Rear horizontal rail (H-KD)
4 c	2	2	Rear horizontal rail (H-ST), with insulation strip for backplane mounting
4 d	-	1	Centre horizontal rail (ST)
5	6	8	Threaded insert (pre-fitted)
6	2	4	Insulation strip, fixed
7	2	2	EMC cover plate
8	1	1	EMC gasketing material (pre-fitted)
9	1	1	Fixing material kit
10	2	2	Perforated strip (pre-fitted)
11	2	2	Horizontal rail type AB
12	1	1	User manual

6 U

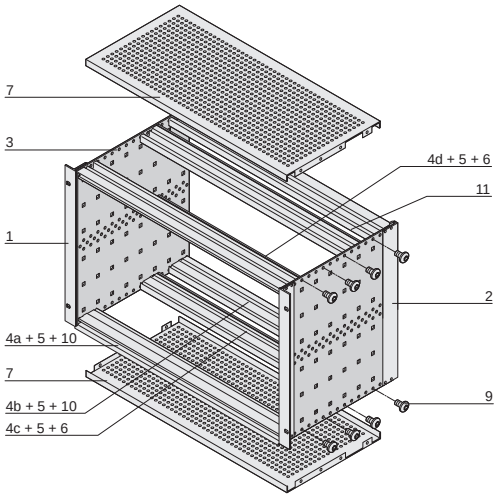

06105076

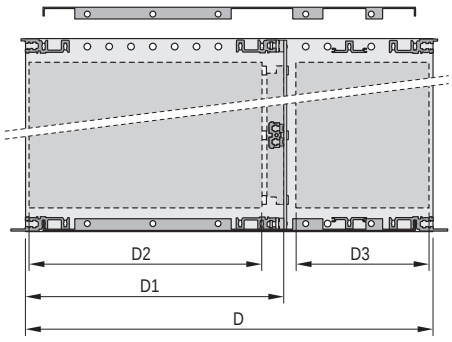

06108075

D = overall depth, D1 = insertion depth,
D2 = board depth = D1 - 15 mm, D3 = rear I/O board depth

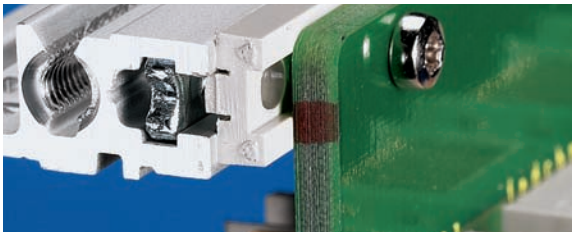

04400001

Rear horizontal rail for backplane mounting with insulation strip

Order Information

Height U	Width HP	Depth D mm	Depth D1 mm	Depth D3 mm	Part no.
3	84	275	175	80	24563-157
6	84	275	175	80	24563-457

Accessories

Guide rail with coding, red 160 mm deep, PBT, UL 94 V-0, groove width 2 mm, PU 10 pieces	24560-356
Guide rail with coding, grey 160 mm deep, PBT, UL 94 V-0, groove width 2 mm, PU 10 pieces	24560-358
Guide rail with coding, green, offset 160 mm deep, PBT, UL 94 V-0, groove width 2 mm, PU 10 pieces	24560-359
ESD clip for guide rails PU 50 pieces	24560-255
ESD clip for alignment pin of CPCI/VME64x handle PU 50 pieces	24560-256
Guide rail with coding, red 70 mm deep, PU 10 pieces	24560-355
Guide rail with coding, grey 70 mm deep, PU 10 pieces	24560-360
Torx panhead screw 2.5 × 9.3, zinc-plated, PU 100 pieces; torque max. 0.2 Nm	24560-141
Coding peg PC, UL 94 V-0, RAL 7035, PU 100 pieces	20817-501
19" fixing material kit (screw, washer, nut) (8 × screws, 8 × plastic washers, 8 × cage nuts)	21100-435

Note

- ServicePLUS configuration from page 6.16

ServicePLUS see page 6.16

configuration

Components can be varied and combined freely

Simple. Fast. To the ideal product.

- Configuration tables from page 6.17
- Online configuration: **www.schroff.co.uk/configuration**

assembly

Fitting of all mechanical, electrical and electronic components by our specialists

Assembled by professionals. Double benefit!

- Professional and reliable from quantity 1
- Ready for despatch within 5 working days

modification

Custom drillings, cut-outs and special colours for off-the-shelf products

Small changes. Large impact.

- Custom modifications from quantity 1
- Ready for despatch within 10 working days

solution

Integration and custom developments

Simple. Fast. From one source.

- Special sizes (depth and width)
- Individual heat dissipation concepts
- Ready for despatch within 10 working days

express

Delivery time to customer's request

When fast has to be faster.

- Express logistics

academy

Knowledge transfer and partnership

Knowledge. Sharing. Partnerships.

- Seminars, CAD drawings, test reports, user reports

Overview of individual components for shielded or unshielded subracks

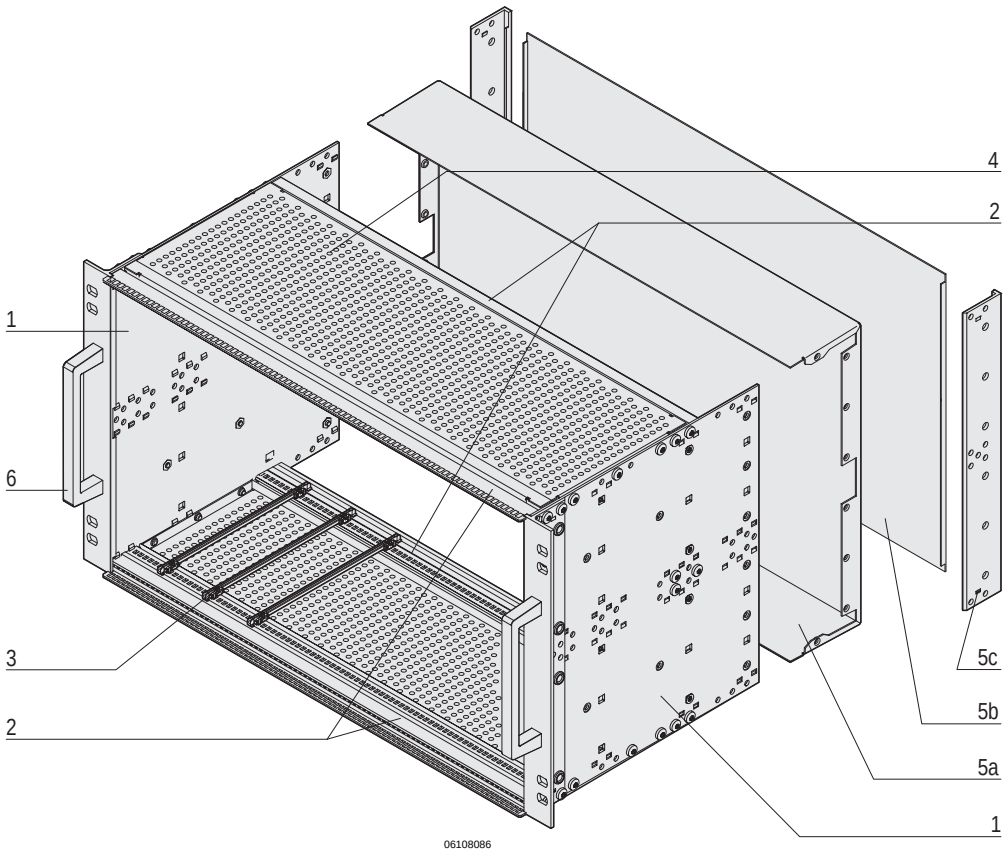

Item	Description	Description	page
Item 1	Side panel	Establishes the height and depth of the subrack; Al, 2 mm, with universal hole positions for assembly of accessories. Three versions: The "flexible" one with separate 19" brackets as well as two others with integrated 19" brackets for "light" and "heavy" applications.	6.19
Item 2	Horizontal rail	Establishes the width of the subrack; Al extrusion, with defined hole positions for guide rails, grooves for threaded inserts, M4 thread, functional rail shapes, basically differing with regard to their mechanical loading capacity: “light“ (load up to 7.5 kg) and “heavy“ (load > 7.5 kg).	6.27
Item 3	Guide rails	Act as interface between subracks and boards, for different board formats, are available in plastic or metal, optionally codable and can be fitted with ESD clips to allow electrostatic discharge, also optionally.	6.35
Item 4	Cover plates	Provide mechanical protection and/or EMC shielding and are perforated.	6.42
Item 5	Rear/front	Rear hood (5a) or front panel (5b) with corner profile (5c) act as support for EMC shielding gaskets used in conjunction with shielded front panels. Note: Rear hood and corner profile cannot be fitted simultaneously.	6.47
Item 6	Handles	Can be mounted on the 19" brackets.	6.25
–	EMC shielding (without illustration)	Extensive component range for specific shielding of subracks with respect to their application.	6.52
–	Interior assemblies (without illustration)	Universal assemblies, e.g. for horizontal and vertical assembly and for mounting plates.	6.57

Subrack dimensions

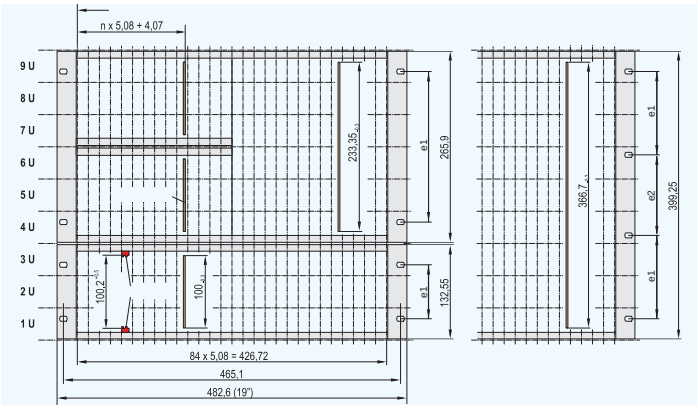

20304051

- Dimensions in accordance with international standards EC 60297-3-100, IEEE 1101.1/.10/.11; please see the Schroff Standards Summary for details
- Side panels
  - Aluminium, 2 mm
  - Round holes for mounting horizontal rails (depth grid 15 mm)
  - Impressions on the inner side of the side panel act as an anti-rotation guard and positioning aid for the horizontal rails
  - Square holes (6 x 6 mm) provide universal fixing for components such as backplane shielding; version without square holes available on request

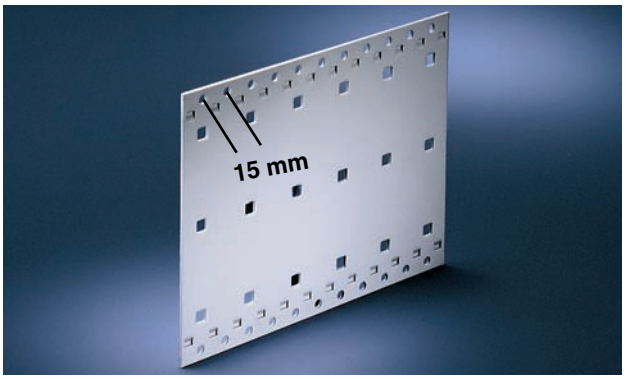

06103001

Depth grid

The depth grid is 15 mm, the mounting holes in the side panel are decisive for the configurability of individual components; thus any combination of various individual parts is possible

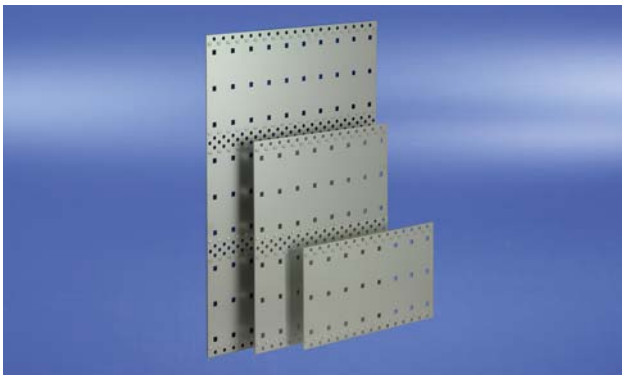

06108008

Side panel 3 U, 6 U and 9 U

3 and 6 U side panels have the same hole positions (the 6 U is a doubling vertically of the 3 U); thus subdivisions can be made in the vertical dimension (6 U: 2 x 3 U; 9 U: 3 x 3 U)

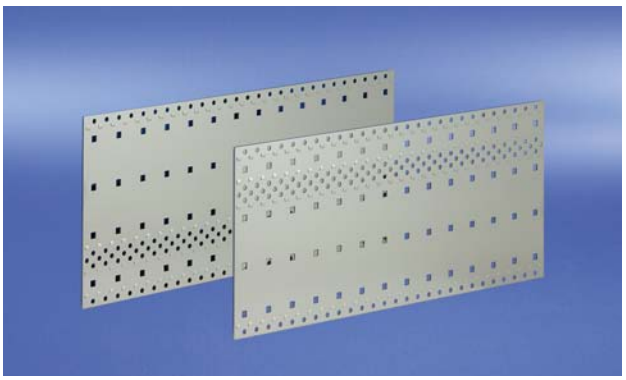

06108011

Side panel 4 U

4 U side panels have the same hole positions as 3 U and additionally 1 U (above or beneath the 3 U installation); this height allows the construction of a 3 U unit with 1 U clearance for cabling or airflow

Side panels

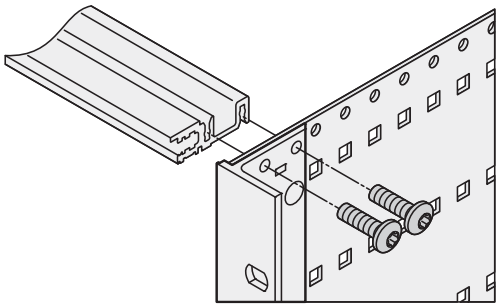

06108062

Side panel - horizontal rail assembly

- Aluminium
- Round holes for mounting horizontal rails (depth grid 15 mm)
- Impressions on the inner side of the side panel act as an anti-rotation guard and positioning aid for the horizontal rails
- Square holes (6 x 6 mm) provide universal fixing for components such as backplane shielding; version without square holes available on request
- Only one type of screw driver is needed for the assembly (torx panhead screw, M4 x 14; torque side panel - horizontal rail 2.4 Nm; torque side panel - cover plate 1.3 Nm)
- 4 versions of the side panel:
  - Type F = flexible
  - Type H = heavy
  - Type L = light
  - Type R = rugged

Note

- Type R - rugged side panels see "Rugged Subracks" section, page 6.97

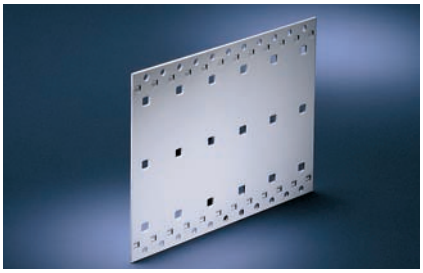

06197003

Type F (flexible)

- Universal version: 19" bracket (please order separately) can be fitted variably to front, rear or depth-offset
- Heights: 3, 4, 6 and 9 U
  Depths: 175, 235, 275, 277.75, 295, 355, 415 and 475 mm;
  Other dimensions on request
- 2 EMC shielding concepts for the front/rear: stainless steel or textile EMC gasket
- Installed load up to 11 kg



06197004

Type H (heavy)

- 19" bracket is tox-cold welded to side panel; particularly designed for mechanically demanding environments (vibration resistance, applications requiring high levels of shock and vibration, e.g. IEC 61587-2)
- Heights: 3 and 6 U
  Depths: 175, 235, 295 and 355 mm
  Other dimensions on request
- 2 EMC shielding concepts for the front/rear: with stainless steel or textile EMC gasekt
- Installed load up to 15 kg



06197002

Type L (light)

- Side panel with moulded 19" bracket, for standard applications, unshielded
- Particularly cost-effective version (not suitable for EMC applications)
- Heights: 3 and 6 U
  Depths: 175, 235 and 295 mm
  Other dimensions on request
- Installed load up to 7.5 kg

Side panels type F for stainless steel gasket

Order Information

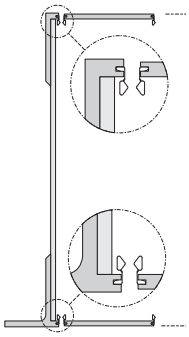

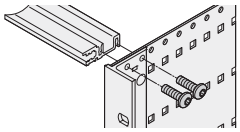

06108070 06108062

Height	Depth		Side panel type F	19" bracket without handle holes	19" bracket with handle holes	19" bracket depth-adjustable	EMC gasket (stainless steel)	Rear angle	Side panel connection
			 06197003	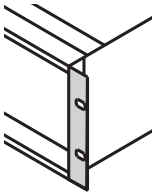 bza45819	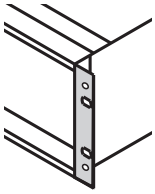 06106050	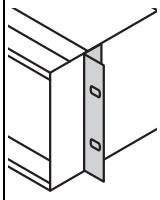 06102501	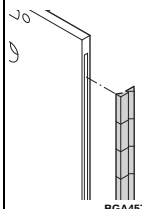 BGA45760	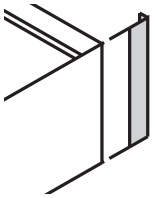 BZA46573	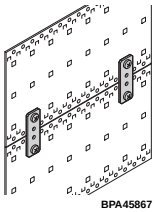 BPA45867
			without 19" bracket, Al, 2 mm, passivated, please order 19" bracket and corner profile separately	with lateral grooves for stainless steel EMC gasket, Al extrusion, rear side etched, front anodised	with lateral grooves for stainless steel EMC gasket, Al extrusion, rear side etched, front anodised please order front handles separately, see page 6.25	Al extrusion, passivated	inserted laterally into the grooves of the front panel	Al extrusion, surface clear passivated; with lateral grooves for stainless steel EMC gasekt; rear hood cannot be mounted simultaneously	Zn die-cast, incl. fixing material kit, for connecting two by two side panels (on top of each other)
U	mm		1 piece	PU 1 pair	PU 1 pair	PU 1 pair	PU 10 pieces	PU 1 pair	PU 4 pieces
3	175		34560-185	24560-197	24560-198	24560-199	21101-705	24561-198	21101-954
3	235		34560-187						
3	275	1)	34579-300						
3	277.75	2)	34579-002						
3	295		34560-189						
3	355		34560-191						
3	415		34560-193						
3	475		34560-195						
4	175	3)	34560-285	24560-297	24560-298	24560-299	21101-713	24561-298	21101-954
4	235	3)	34560-287						
4	295	3)	34560-289						
4	355	3)	34560-291						
4	415	3)	34560-293						
4	475	3)	34560-295						
6	175		34560-485	24560-497	24560-498	24560-499	21101-707	24561-498	21101-954
6	235		34560-487						
6	275	1)	34579-038						
6	277.75	2)	34579-012						
6	295		34560-489						
6	355		34560-491						
6	415		34560-493						
6	475		34560-495						
6	970		34560-496						
9	175		34560-785	24560-797	24560-798	24560-799	21101-709	24561-798	21101-954
9	235		34560-787						
9	295		34560-789						
9	355		34560-791						
9	415		34560-793						
Screw, M4 x 14, PU 100 pieces, for fastening horizontal rail to side panel			24560-130	24560-130	24560-130	24560-130	–	24560-130	–
Screw, M4 x 10, required if guide rails are screwed to slot 1, PU 100 pieces			24560-155	24560-155	24560-155	24560-155	–	24560-155	–

1) CompactPCI 2) VME64x 3) Grid holes of side panel 3 + 1 U

■ View of side panels 3, 4, 6, 9 U see page 6.18

Side panels type F for textile EMC gasket

Order Information

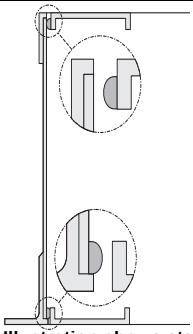

Illustration shows standard assembly, not VME or CompactPCI bus with rear I/O

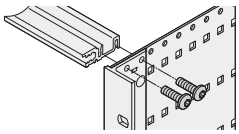

06108054 06108062

Height U	Depth mm		Side panel type F	19" bracket without handle holes	19" bracket with handle holes	19" bracket depth-adjustable	EMC gasket (textile)	Rear angle	Side panel connection
			 06197003	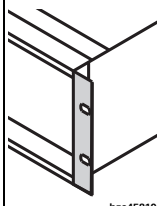 bza45819	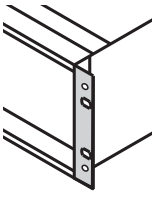 06106050	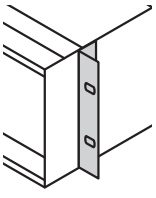 06102501	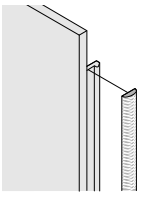 04602054	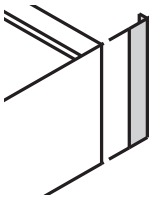 BZA46573	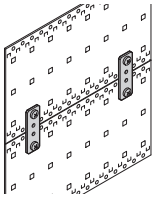 BPA45867
			without 19" bracket, Al, 2 mm, passivated, please order 19" bracket and corner profile separately	Al extrusion for textile EMC gasket rear side etched, front anodised	Al extrusion for textile EMC gasket, rear side etched, front anodised, please order front handles separately, see page 6.25	Al extrusion, passivated	textile gasket, core: foam, sleeve: textile cladding with CuNi coating, UL 94 V-0	Al extrusion, etched; for textile EMC gasket	Zn die-cast, incl. fixing material kit, for connecting two by two side panels (on top of each other)
			1 piece	PU 1 pair	PU 1 pair	PU 1 pair	PU 10 pieces	PU 1 pair	PU 4 pieces
3	175		34560-185	24564-197	24564-198	24560-199	21101-853	24564-199	21101-954
3	235		34560-187						
3	275	1)	34579-300						
3	277.75	2)	34579-002						
3	295		34560-189						
3	355		34560-191						
3	415		34560-193						
3	475		34560-195						
4	175	3)	34560-285	24564-297	24564-298	24560-299	21101-858	24564-299	21101-954
4	235	3)	34560-287						
4	295	3)	34560-289						
4	355	3)	34560-291						
4	415	3)	34560-293						
4	475	3)	34560-295						
6	175		34560-485	24564-497	24564-498	24560-499	21101-855	24564-499	21101-954
6	235		34560-487						
6	275	1)	34579-038						
6	277.75	2)	34579-012						
6	295		34560-489						
6	355		34560-491						
6	415		34560-493						
6	475		34560-495						
6	970		34560-496						
9	175		34560-785	24564-797	24564-798	24560-799	21101-859	24564-799	21101-954
9	235		34560-787						
9	295		34560-789						
9	355		34560-791						
9	415		34560-793						
Screw, M4 x 14, PU 100 pieces, for fastening horizontal rail to side panel			24560-130	24560-130	24560-130	24560-130	–	24560-130	–
Screw, M4 x 10, required if guide rails are screwed to slot 1, PU 100 pieces			24560-155	24560-155	24560-155	24560-155	–	24560-155	–

1) CompactPCI 2) VME64x 3) Grid holes of side panel 3 + 1 U

Side panels type H for **stainless steel EMC gasket**

Order Information

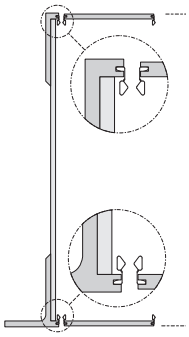

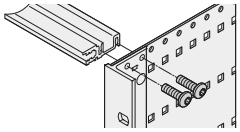

06108070 06108062

Height	Depth		Side panel type H for stainless steel EMC gasket without handle holes	Side panel type H for stainless steel EMC gasket with handle holes	Side panel type H for stainless steel EMC gasket EMC gasket (stainless steel)	Rear angle	Side panel connection
			 06107004	 06107001	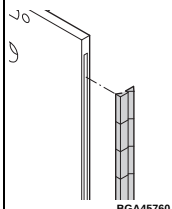 BGA45760	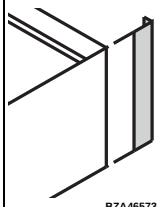 BZA46573	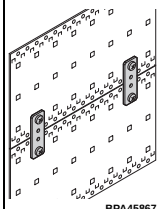 BPA45867
			for high mechanical demands, 19" bracket, tox-cold welded, Al, 2 mm, clear passivated, front anodised	for high mechanical demands, 19" bracket, tox-cold welded, Al, 2 mm, clear passivated, front anodised, please order front handles separately see page 6.25	inserted laterally into the grooves of the front panel	Al extrusion, surface clear passivated; with lateral grooves for stainless steel EMC gasekt; rear hood cannot be mounted simultaneously	Zn die-cast, incl. fixing material kit, for connecting two by two side panels (on top of each other)
U	**mm**		**PU 1 pair**	**PU 1 pair**	**PU 10 pieces**	**PU 1 pair**	**PU 4 pieces**
3	175		24566-125	24567-125	21101-705	24561-198	21101-954
3	235		24566-127	24567-127			
3	275	1)	–	–			
3	277.75	2)	–	–			
3	295		24566-129	24567-129			
3	355		24566-131	24567-131			
3	415		–	–			
3	475		–	–			
4	175	3)	–	–	–	–	–
4	235	3)					
4	295	3)					
4	355	3)					
4	415	3)					
4	475	3)					
6	175		24566-425	24567-425	21101-707	24561-498	21101-954
6	235		24566-427	24567-427			
6	275	1)	–	–			
6	277.75	2)	–	–			
6	295		24566-429	24567-429			
6	355		24566-431	24567-431			
6	415		–	–			
6	475		–	–			
6	970		–	–			
9	175		–	–	–	–	–
9	235						
9	295						
9	355						
9	415						
Screw, M4 x 14, PU 100 pieces, for fastening horizontal rail to side panel			24560-130	24560-130	–	24560-130	–
Screw, M4 x 10, required if guide rails are screwed to slot 1, PU 100 pieces			24560-155	24560-155	–	24560-155	–

1) CompactPCI 2) VME64x 3) Grid holes of side panel 3 + 1 U

Part number in bold face type: ready for despatch within 2 working days
Part number in normal type: ready for despatch within 10 working days

Side panels type H for **textile EMC gasket**

Order Information

			Side panel type H for textile EMC gasket			Rear angle	Side panel connection
			without handle holes	with handle holes	EMC gasket (textile)		
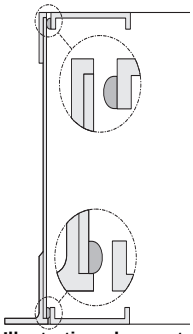 Illustration shows standard assembly, not VME or CompactPCI bus with rear I/O			 06107001 for high mechanical demands, 19" bracket, tox-cold welded, Al, 2 mm, clear passivated, front anodised	 06107001 for high mechanical demands, 19" bracket, tox-cold welded, Al, 2 mm, clear passivated, front anodised, please order front handles separately see page 6.25	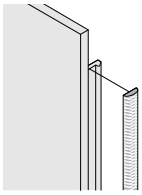 04602054 textile gasket, core: foam, sleeve: textile cladding with CuNi coating, UL 94 V-0	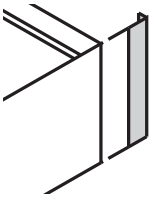 BZA46573 Al extrusion, etched; for textile EMC gasket	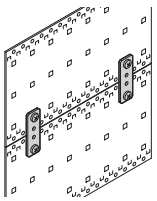 BPA45867 Zn die-cast, incl. fixing material kit, for connecting two by two side panels (on top of each other)
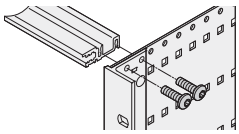 06108070 06108062							
Height	**Depth**						
U	**mm**		**PU 1 pair**	**PU 1 pair**	**PU 10 pieces**	**PU 1 pair**	**PU 4 pieces**
3	175		24564-145	24566-145	21101-853	24564-199	21101-954
3	235		24564-147	24566-147			
3	275	1)	–	–			
3	277.75	2)	–	–			
3	295		24564-149	24566-149			
3	355		24564-151	24566-151			
3	415		–	–			
3	475		–	–			
4	175	3)	–	–	–	–	–
4	235	3)					
4	295	3)					
4	355	3)					
4	415	3)					
4	475	3)					
6	175		24564-445	24566-445	21101-855	24564-499	21101-954
6	235		24564-447	24566-447			
6	275	1)	–	–			
6	277.75	2)	–	–			
6	295		24564-449	24566-449			
6	355		24564-451	24566-451			
6	415		–	–			
6	475		–	–			
6	970		–	–			
9	175		–	–	–	–	–
9	235						
9	295						
9	355						
9	415						
Screw, M4 x 14, PU 100 pieces, for fastening horizontal rail to side panel			24560-130	24560-130	–	24560-130	–
Screw, M4 x 10, required if guide rails are screwed to slot 1, PU 100 pieces			24560-155	24560-155	–	24560-155	–

1) CompactPCI 2) VME64x 3) Grid holes of side panel 3 + 1 U

Side panels type L

Order Information

Height U	Depth mm		Side panel type L	Front cover	Collar screw with slot for assembly of front cover	Sleeves for assembly of front cover	Side panel connection
			 06197002	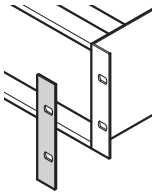 BZA45810	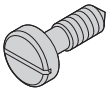 06708055	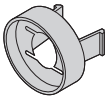 00508056	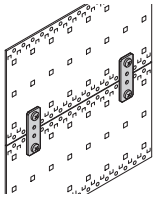 BPA45867
			Al, 2 mm, passivated	for decorative finish of 19" bracket, Al, 2 mm, anodised	M6 x 16, St, nickel-plated	PPE, black	Zn die-cast, incl. fixing material kit, for connecting two by two side panels (on top of each other)
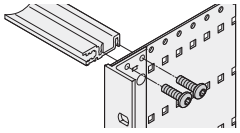 06108062							
U	**mm**		**1 piece**		**PU 100 pieces**	**PU 100 pieces**	**PU 4 pieces**
3	175		34561-185	34561-197	21100-565	21100-566	21101-954
3	235		34561-187				
3	275	1)	–				
3	277.75	2)	–				
3	295		34561-189				
3	355		–				
3	415		–				
3	475		–				
4	175	3)	–	–	–	–	–
4	235	3)					
4	295	3)					
4	355	3)					
4	415	3)					
4	475	3)					
6	175		34561-485	34561-497	21100-565	21100-566	21101-954
6	235		34561-487				
6	275	1)	–				
6	277.75	2)	–				
6	295		34561-489				
6	355		–				
6	415		–				
6	475		–				
6	970		–				
9	175		–	–	–	–	–
9	235						
9	295						
9	355						
9	415						
Screw, M4 x 14, PU 100 pieces, for fastening horizontal rail to side panel			24560-130	–	–	–	–
Screw, M4 x 10, required if guide rails are screwed to slot 1, PU 100 pieces			24560-155	–	–	–	–

1) CompactPCI 2) VME64x 3) Grid holes of side panel 3 + 1 U

Front handles, wall-mounting brackets

Order Information

				Front handle		Universal front handle		Wall-mounting bracket
				clear anodised	black anodised			
				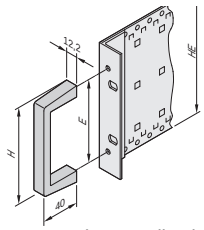 06102068 Al extrusion, anodised load-carrying capacity 30 kg		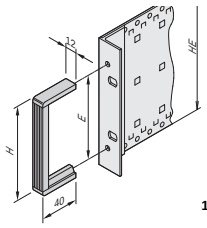 102069 3 parts: Al extrusion, clear anodised, 2 end pieces, plastic, PA, black; width 12 mm, depth 40 mm load-carrying capacity 10 kg		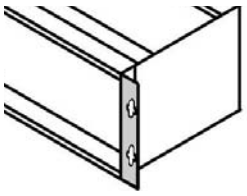 06104063 Al, 2.5 mm, passivated; bolted to subrack in place of the 19" bracket
Height U	Depth mm	H mm	E mm	1 piece (SPQ 10)[1]	1 piece (SPQ 10)[1]	1 piece (SPQ 10)[1]		PU 1 pair
3	175	102	88.0	10501-005	10501-026	10502-057		24562-197
3	235	102	88.0					
3	275	102	88.0					
3	277.75	102	88.0					
3	295	102	88.0					
3	355	102	88.0					
3	415	102	88.0					
3	475	102	88.0					
4	175	146	133.4	10501-018	–	10502-060		24562-297
4	235	146	133.4					
4	295	146	133.4					
4	355	146	133.4					
4	415	146	133.4					
4	475	146	133.4					
6	175	249	235.0	10501-008	10501-029	10502-065		24562-497
6	235	249	235.0					
6	275	249	235.0					
6	277.75	249	235.0					
6	295	249	235.0					
6	355	249	235.0					
6	415	249	235.0					
6	475	249	235.0					
6	970	249	235.0					
9	175	249	235.0	10501-008	10501-029	10502-065		24562-797
9	235	249	235.0					
9	295	249	235.0					
9	355	249	235.0					
9	415	249	235.0					
Screw M5 x 12, PU 100 pieces				24560-183	24560-183	24560-183		–
Screw M5 x 12, PU 4 pieces				24560-182	24560-182	24560-182		–
Screw, M4 x 14, PU 100 pieces				–	–	–		24560-130

1) SPQ (standard pack quantity): Part number includes 1 piece, but delivery is exclusively made in standard pack quantity (SPQ); please order at least the SPQ quantity or a multiple

Horizontal rails



light



heavy



rugged

- Aluminium profile, surface anodised, conductive contact surfaces for EMC gaskets
- The horizontal rail is marked with sequential numbering (for sizes > 28 HP) to facilitate positioning of the guide rails
- Horizontal rails are fixed to the side panel using M4 bolts with torx 20 drive
- There are 3 different horizontal rails for different loading levels
  – light, for up to 7.5 kg
  – heavy, for 7.5 kg to 15 kg
  – rugged, for 15 kg to approx. 60 kg

Mounting position of the horizontal rails

	PCB as deep as side panel	Cabling space behind backplane	Rear I/O installation (CompactPCI, VME64x applications)
	front rear	front rear	front rear
3 U	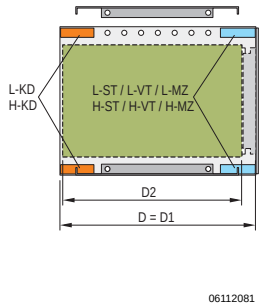	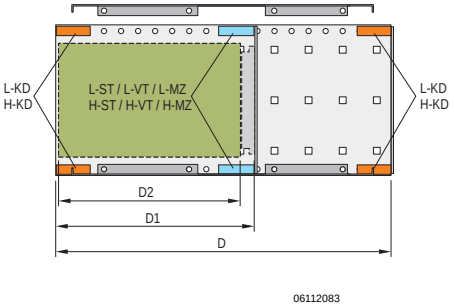	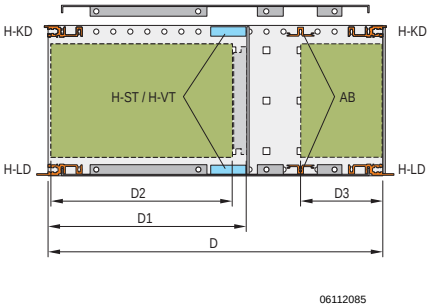
	160, 220, 280 mm, ...	160, 220, 280 mm, ...	160 mm/80 mm
6 U = 3 U + 3 U	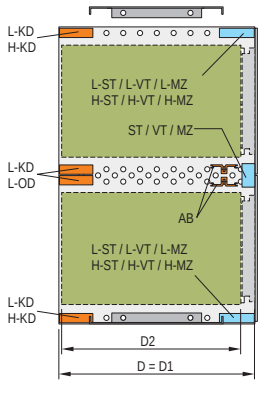	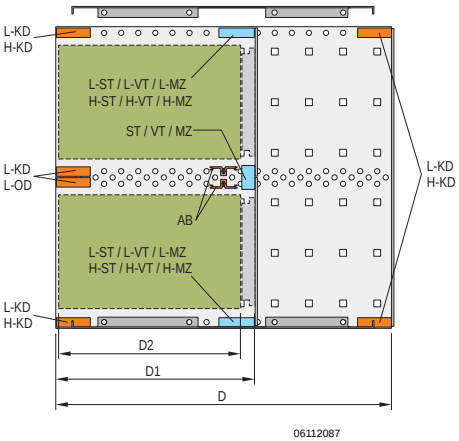	
	160, 220, 280 mm, ...	160, 220, 280 mm, ...	
6 U	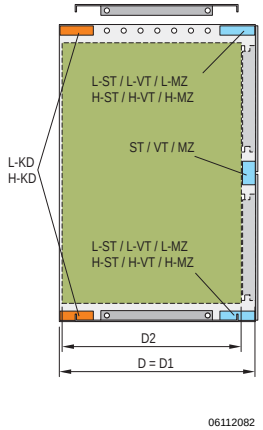	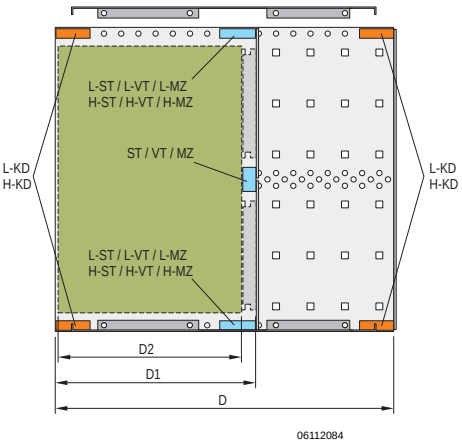	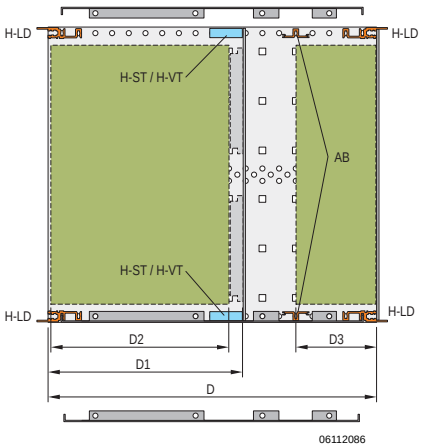
	160, 220, 280 mm, ...	160, 220, 280 mm, ...	160 mm/80 mm

Part number in bold face type: ready for despatch within 2 working days
Part number in normal type: ready for despatch within 10 working days

Front horizontal rails

Assembly 3 U, 2 x 3 U, 6 U

"light" (L)



06197007

"heavy" (H)

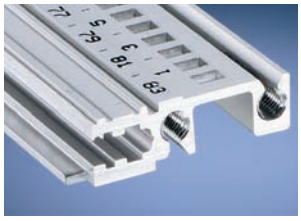

06197008

"heavy" (H)



06197009

3 U/6 U

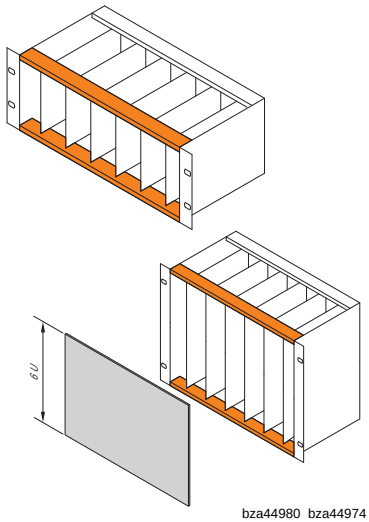

bza44980 bza44974

Short lip

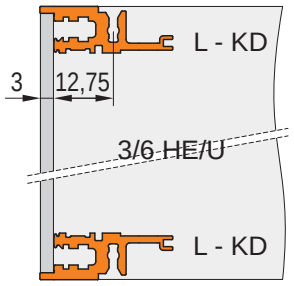

06105060

Short lip

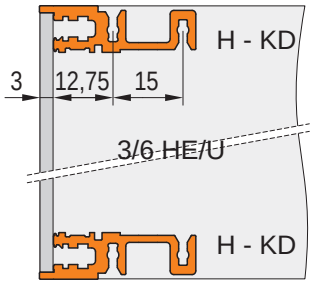

06105061

Long lip

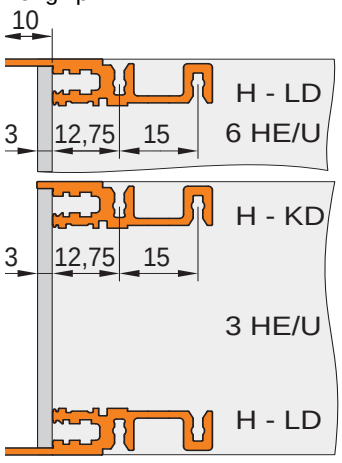

06108063

2 x 3 U

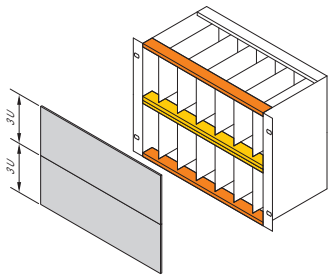

bza44972

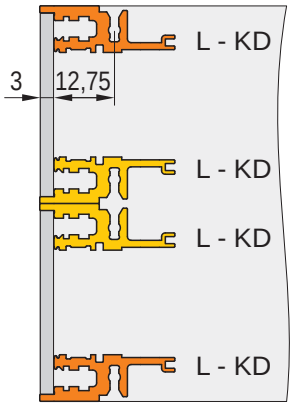

06105062

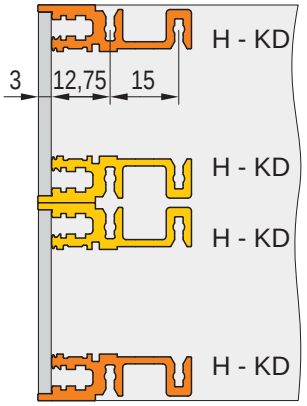

06105063

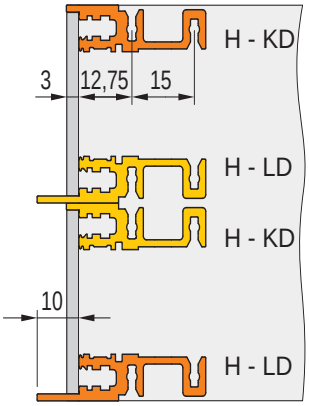

06108064

2 x 3 U, 6 U

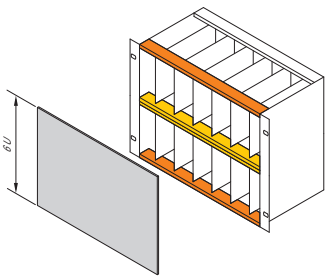

06105059

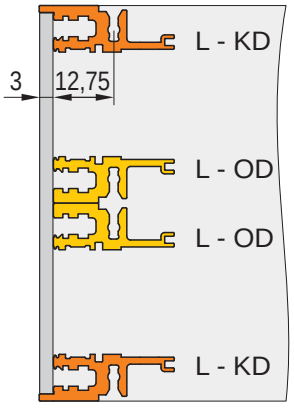

06105064

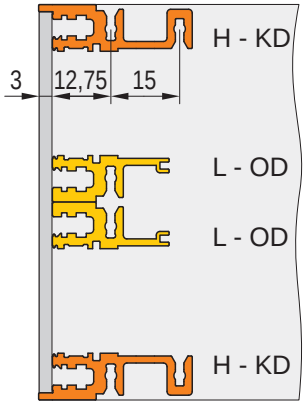

06105065

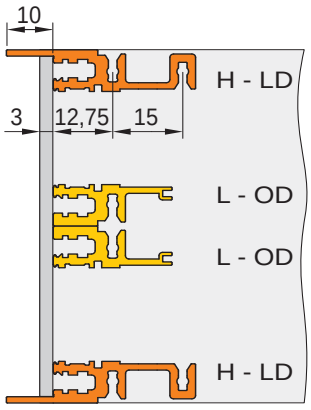

06108065

L-OD = Light - without lip, L-KD = Light - short lip, H-KD = Heavy - short lip, H-LD = Heavy - long lip

Front horizontal rails

Order Information

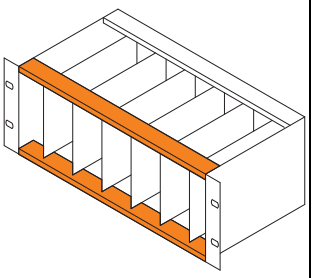 bza44980	"light" Type L-OD without lip  06197006	"light" Type L-KD short lip  06197007	"heavy" Type H-KD short lip  06197008	With long lip for insertion/ extraction of CompactPCI and VME64x boards "heavy" Type H-LD long lip  06197009
With HP markings from 28 HP, Al extrusion, anodised finish, conductive contact surface	Al extrusion, anodised finish, conductive contact surface, with printed HP markings without lip: 2 x 3 U installation and continuous 6 U front panel	Al extrusion, anodised finish, conductive contact surface, with printed HP markings short lip: horizontal rail and front panel form a single plane	Al extrusion, anodised finish, conductive contact surface, with printed HP markings short lip: horizontal rail and front panel form a single plane	Al extrusion, anodised finish, conductive contact surface, with printed HP markings long lip: for insertion/extraction of CompactPCI or VME64x boards
Usable length HP / **Length mm**	**1 piece (SPQ 10)[1)]**	**1 piece (SPQ 10)[1)]**	**1 piece (SPQ 10)[1)]**	**1 piece (SPQ 10)[1)]**
20 / 106.68	34560-020	34560-120	34560-220	34560-320
28 / 147.32	34560-028	34560-128	34560-228	34560-328
40 / 208.28	34560-040	34560-140	34560-240	34560-340
42 / 218.44	34560-042	34560-142	34560-242	34560-342
63 / 325.12	34560-063	34560-163	34560-263	34560-363
84 / 431.80	34560-084	34560-184	34560-284	34560-384
– / 1000	34560-001	34560-101	34560-201	34560-301
Screw, M4 x 14, PU 100 pieces	24560-130	24560-130	24560-130	24560-130
Screw, M4 x 10, required if guide rails are screwed to slot 1, PU 100 pieces	–	–	24560-155	24560-155
Threaded inserts see page	6.33	6.33	6.33	6.33

1) SPQ (standard pack quantity): Part number includes 1 piece, but delivery is exclusively made in standard pack quantity (SPQ); please order at least the SPQ quantity or a multiple
"light": loading capacity up to approx. 7.5 kg; "heavy": loading capacity > 7.5 kg

Note

- 1000 mm version without M4 thread to front, without printed markings and without notch for 19"-bracket
- Rugged horizontal rails with 3 fixing holes see section "Rugged Subracks", page 6.99

Rear horizontal rails

Indirect backplane mounting (with insulation strip)

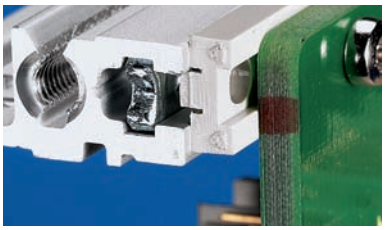

04400001

Direct backplane mounting

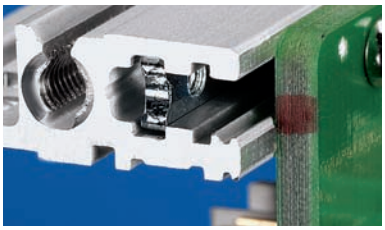

04400002

Connector fitting with Z

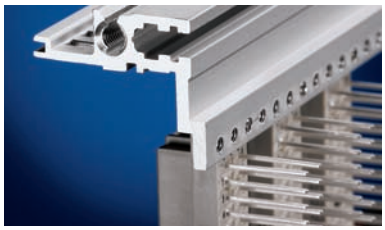

04400003

"light"

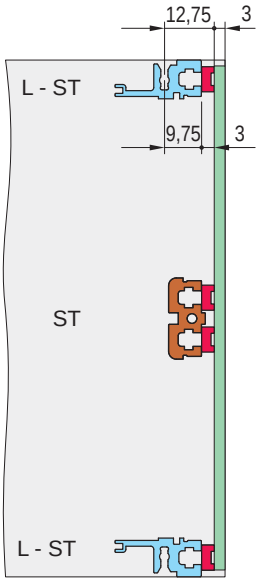

06105072

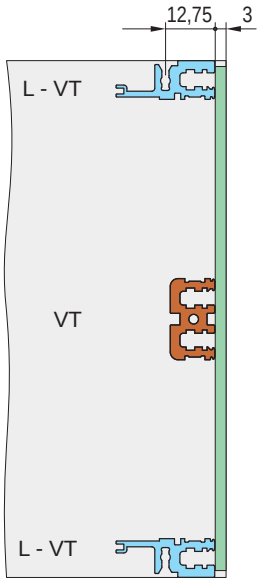

06105073

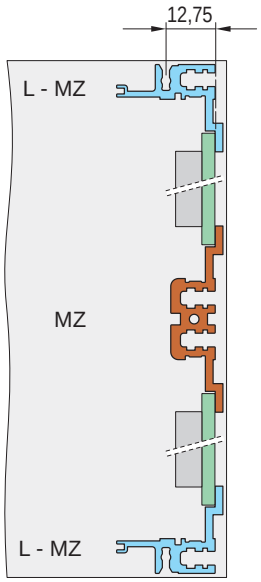

06105071

"heavy"

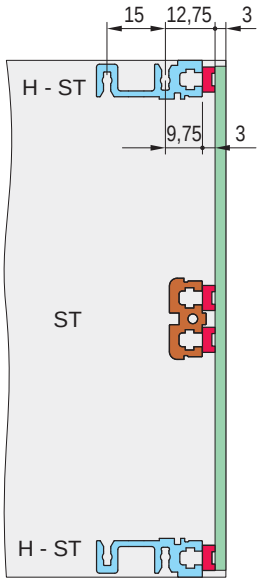

06108066

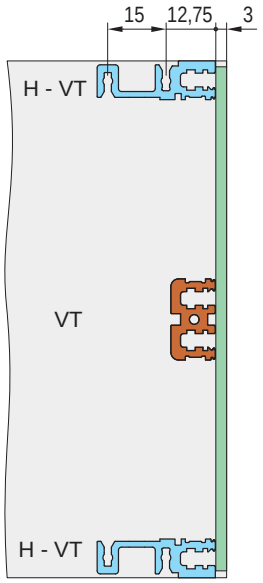

06108067

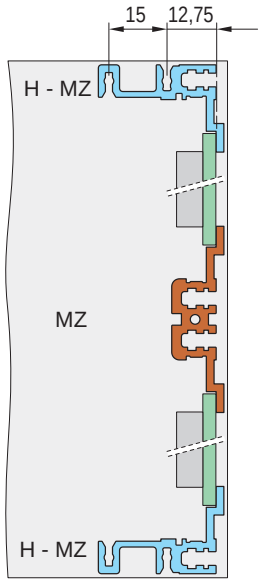

06108068

ST = standard, L = light, H = heavy

VT = depth-offset, L = light, H = heavy

MZ = with Z-rail, L = light, H = heavy

Rear horizontal rails, top and bottom

Order Information

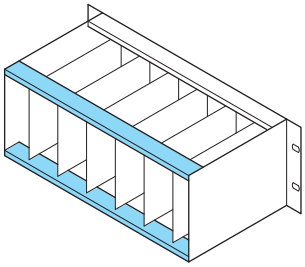

06105074

		For indirect backplane mounting with insulation strip		For direct backplane mounting		For direct fixing of connectors in accordance with EN 60603-2 (DIN 41612)	
		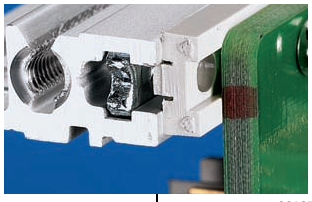 06197011		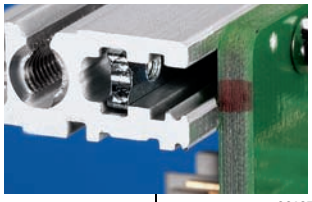 06197011		 06197011	
		"light" Type L-ST standard	"heavy" Type H-ST standard	"light" Type L-VT + 3 mm	"heavy" Type H-VT + 3 mm	"light" Type L-MZ with Z-rail	"heavy" Type H-MZ with Z-rail
		 06197010	 06197011	 BZA45782	 06197009	 06197014	 06197015
With HP markings from 28 HP, Al extrusion, anodised finish, conductive surface		Al extrusion, anodised surface, conductive contact surface, with printed HP markings	Al extrusion, anodised surface, conductive contact surface, with printed HP markings	Al extrusion, anodised surface, conductive contact surface, with printed HP markings	Al extrusion, anodised surface, conductive contact surface, with printed HP markings	Al extrusion, anodised surface, conductive contact surface, with printed HP markings	Al extrusion, anodised surface, conductive contact surface, with printed HP markings
Usable length HP	**Length mm**	**1 piece (SPQ 10)[1)]**	**1 piece (SPQ 10)[1)]**	**1 piece (SPQ 10)[1)]**	**1 piece (SPQ 10)[1)]**	**1 piece (SPQ 10)[1)]**	**1 piece (SPQ 10)[1)]**
20	106.68	34560-420	34560-520	34560-620	34560-720	34560-820	34560-920
28	147.32	34560-428	34560-528	34560-628	34560-728	34560-828	34560-928
40	208.28	34560-440	34560-540	34560-640	34560-740	34560-840	34560-940
42	218.44	34560-442	34560-542	34560-642	34560-742	34560-842	34560-942
63	325.12	34560-463	34560-563	34560-663	34560-763	34560-863	34560-963
84	431.80	34560-484	34560-584	34560-684	34560-784	34560-884	34560-984
–	1000	34560-401	34560-501	34560-601	34560-701	34560-801	–
Screw, M4 x 14, PU 100 pieces, for fastening horizontal rail to side panel		24560-130	24560-130	24560-130	24560-130	24560-130	24560-130
Screw, M4 x 10, required if guide rails are screwed to slot 1, PU 100 pieces		–	24560-155	–	24560-155	–	24560-155
Perforated rail for connector mounting with insulation strip see page		6.34	6.34	–	–	–	–
Z-rail for connector mounting without insulation strip see page		6.34	6.34	–	–	–	–
Insulation strips see page		6.33	6.33	–	–	–	–
Threaded inserts see page		6.33	6.33	6.33	6.33	6.33	6.33

1) SPQ (standard pack quantity): Part number includes 1 piece, but delivery is exclusively made in standard pack quantity (SPQ); please order at least the SPQ quantity or a multiple
"light": loading capacity up to approx. 7.5 kg; "heavy": loading capacity > 7.5 kg

Note

- 1000 mm version without M4 thread to front, without printed markings and without notch for 19"-bracket
- Rugged horizontal rails with 3 fixing holes see section "Rugged Subracks", page 6.99

Rear horizontal rails, centre, for 6 U

Order Information

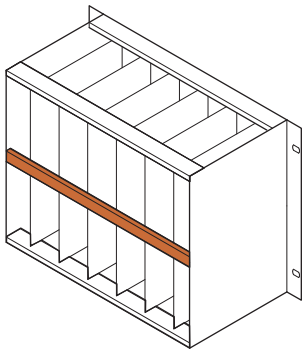

06108090

		For indirect backplane mounting with insulation strip	For direct backplane mounting	For direct fixing of connectors in accordance with EN 60603-2 (DIN 41612)
		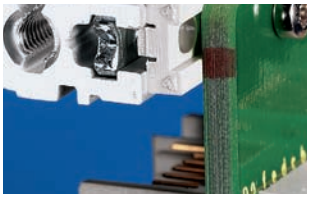 06197016	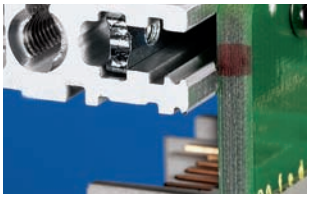 06197017	 06197018
		Type ST	**Type VT**	**Type MZ**
		 06197016	 06197017	 06197018
		Al extrusion, anodised surface, conductive contact surface, without printed markings	Al extrusion, anodised surface, conductive contact surface, without printed markings	Al extrusion, anodised surface, conductive contact surface, without printed markings
Usable length HP	**Length mm**	**1 piece (SPQ 10)[1)]**	**1 piece (SPQ 10)[1)]**	**1 piece (SPQ 10)[1)]**
20	106.68	34561-020	34561-120	34561-220
28	147.32	34561-028	34561-128	34561-228
40	208.28	34561-040	34561-140	34561-240
42	218.44	34561-042	34561-142	34561-242
63	325.12	34561-063	34561-163	34561-263
84	431.80	34561-084	34561-184	34561-284
–	1000	34561-001	34561-101	34561-201
Screw, M4 x 14, PU 100 pieces, for fastening horizontal rail to side panel		24560-130	24560-130	24560-130
Insulation strips see page		6.33	–	–
Threaded inserts see page		6.33	6.33	6.33

1) SPQ (standard pack quantity): Part number includes 1 piece, but delivery is exclusively made in standard pack quantity (SPQ); please order at least the SPQ quantity or a multiple
"light": loading capacity up to approx. 7.5 kg; "heavy": loading capacity > 7.5 kg

Note

- All horizontal rails without printed markings
- 1000 mm version without M4 thread to front

Horizontal rails (type AB) for rear I/O applications

Order Information

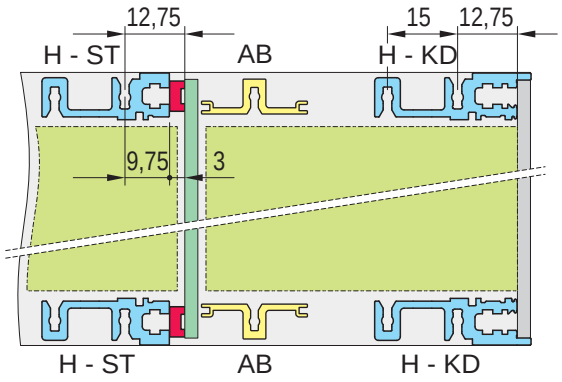

06108069

For CompactPCI in rear I/O area

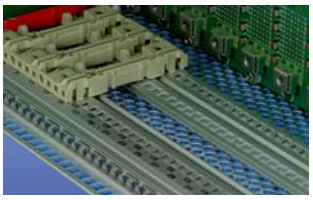

06108009

Type AB



06197009

Al extrusion, anodised surface,
conductive contact surface;
horizontal rail type AB (AB = support)
is required to fix the 80 mm rear I/O boards;
without printed markings

Usable length **HP**	**Length** **mm**	**1 piece (SPQ 10)[1)]**
20	106.68	34561-520
28	147.32	34561-528
40	208.28	34561-540
42	218.44	34561-542
63	325.12	34561-563
84	431.80	34561-584
–	1000	34561-501
Screw, M4 x 14, PU 100 pieces, for fastening horizontal rail to side panel		24560-130

1) SPQ (standard pack quantity): Part number includes 1 piece, but delivery is exclusively made in standard pack quantity (SPQ);
please order at least the SPQ quantity or a multiple
"light": loading capacity up to approx. 7.5 kg; "heavy": loading capacity > 7.5 kg

Note

- All horizontal rails without printed markings
- 1000 mm version without M4 thread to front

Order Information

	Threaded insert			Perforated strip		Insulation strip	
	M2.5 / M3			(item 1)			
	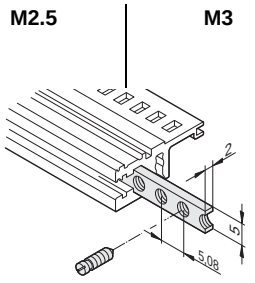 06103056			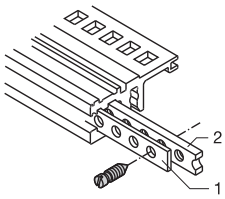 BZA45853		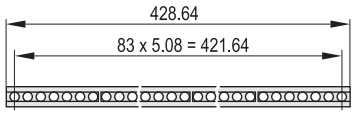 BZ6749	
	required for fixing the front panel to the horizontal rail; St, zinc-plated; use collar screw 12.3 mm, see page 6.64			for centring shielded plug-in units, Al, 1 mm, please order grub screw separately		for insulated backplane mounting; PBT UL 94 V-0, grey	
	Threaded insert			**Perforated strip**		**Insulation strip**	
Usable length HP	**Length mm**	**1 piece (SPQ 10)[1)]**	**1 piece (SPQ 10)[1)]**	**Length mm**	**1 piece (SPQ 10)[1)]**	**Length mm**	**PU 10 pieces**
20	106.18	34561-320	–	106.48	30845-189	101.50	24560-820
28	146.82	34561-328	–	147.12	30845-197	144.20	24560-828
40	207.78	34561-340	–	208.08	30845-209	205.12	24560-840
42	217.94	34561-342	–	218.24	30845-211	210.40	24560-842
63	324.62	34561-363	–	324.92	30845-232	316.88	24560-863
84	431.30	34561-384	34561-484	431.60	30845-253	428.64	24560-884
196	1000.26	34565-196	–	1000.56	34565-396		–
Accessories							
Grub screw M2.5 x 8, PU 100 pieces		21100-276	–		–		–
Grub screw M2.5 x 9, PU 100 pieces		–	–		21101-359		–
Grub screw M3 x 8, PU 100 pieces		–	21100-646		–		–

1) SPQ (standard pack quantity): Part number includes 1 piece, but delivery is exclusively made in standard pack quantity (SPQ); please order at least the SPQ quantity or a multiple

2) Part no. includes one packing unit (PU); delivery is exclusively made in PU

Z-rails, perforated rails

Order Information

		Z-rail for connectors		Perforated rail
		DIN EN 60603-2, DIN 41612 item 1	31-pin, DIN 41617	EN 606032, DIN 41612 item 1
		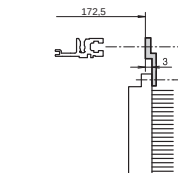 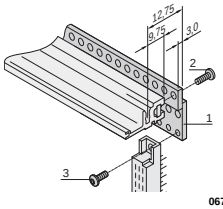	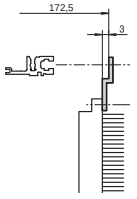	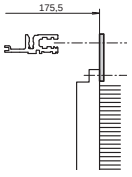 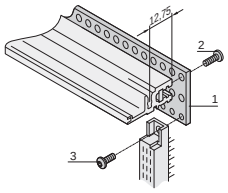
		for connector mounting on ST horizontal rails, please order threaded inserts and screw separately	for connector mounting on ST horizontal rails, please order threaded inserts and screw separately	for connector mounting on VT horizontal rails, please order threaded inserts and screw separately
Usable length HP	**Length mm**	**1 piece**	**1 piece**	**PU 4 pieces**
20	101.60	30822-025	–	20822-051
28	142.24	30822-033	–	20822-049
40	203.20	30822-045	30819-763	20822-046
42	213.36	30822-047	–	20822-050
60	304.80	30822-065	30819-783	20822-047
84	426.72	30822-089	30819-808	20822-048
Item 3, torx panhead screw to fix connector to perforated rail,, M2.5 × 7, PU 100 pieces		24560-147	24560-147	24560-147
Item 2, torx panhead screw, to fix perforated rails to horizontal rail, M2.5 × 10, PU 100 pieces		24560-148	24560-148	24560-148

Part number in bold face type: ready for despatch within 2 working days
Part number in normal type: ready for despatch within 10 working days

Guide rails

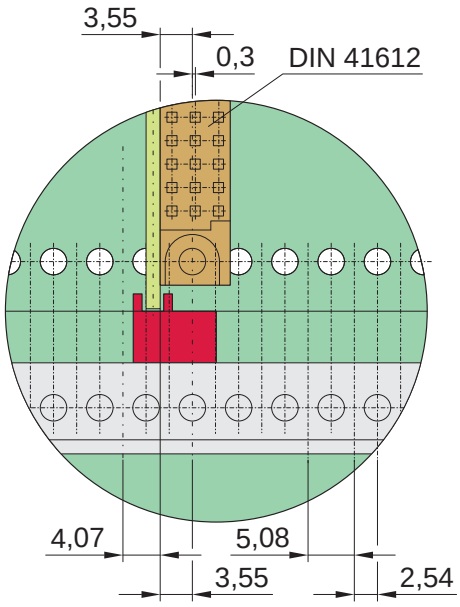

Front view: position of guide rails to connector (EN 60603-2/ DIN 41612)

Guide rails form the interface between the subrack mechanics and the sub-assemblies (PCBs, plug-in units, frame-type plug-in units, ...).

Guide rails for standard applications are 2 HP wide. Guide rails with coding (e.g. for CompactPCI or VME64bus applications) are 4 HP wide.

There are groove widths of 2 mm and 2.5 mm.

The guide rails are clipped into the rectangular cut-outs of the horizontal rails. They can additionally be bolted to the horizontal rail (type H only) for higher shock and vibration requirements.

The printed HP markings on the horizontal rail (28 HP and above) allow the rails to be fitted in the correct position easily (position of sub-assembly = "number in viewing window" or in front of the arrow marking on the guide rails).

Applications for guide rails


06102001

For plug-in units and frame-type plug-in units (with front panels) (standard type)

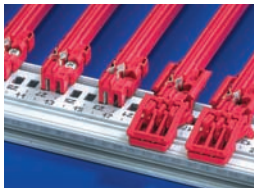
06102002

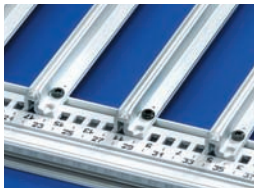
06102005

For plug-in units and frame type plug-in units or for PCBs without their own front panel (accessory type or robust version)

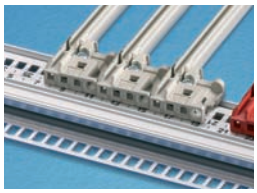
06106004

For CompactPCI or VME64x plug-in units (type IEEE with coding; frame-type plug-in units cannot be fitted)

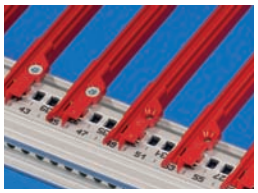
06104009

For plug-in drive unit modules or PCBs in 4.4" (111.7 mm) height (type 4.4")

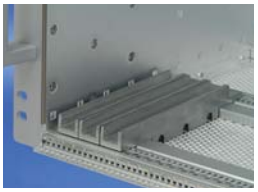
06112022

Rugged guide rails to accommodate conduction cooled assembly (CCA) adaptor

Accessories:
- ESD clip
- Keying/coding pegs
- Board locking

Guide rails for plug-in units and modules, one-piece, groove width 2 mm and 2.5 mm

Order Information

Assembly
- can be clipped into Al extruded horizontal rails
- can be clipped into 1.5 mm thick plates

Storage temperature
from -40 °C ... 130 °C

			For plug-in units and frame type plug-in units standard type		standard type, with DIN connector fixing
			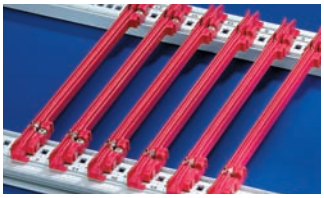 06102001		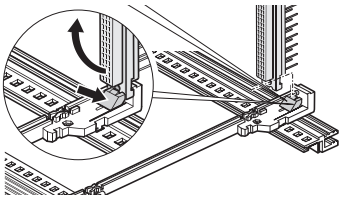 06101501
			up to 220 mm length, PBT, UL 94 V-0; from 280 mm length, multi-piece, end piece PBT, UL 94 V-0, central section Al extrusion	PBT, UL 94 V-0	PBT, UL 94 V-0, red, connector is clipped directly onto the guide rails; for euroboards only, 100 x 160 mm or 100 x 220 mm
Board length mm	**Groove width** mm	**Colour** mm	**PU 10 pieces**[2]	**1 piece (SPQ 50)**[1]	**1 pair (SPQ 10)**[1]
70	2	red	–	34579-230	–
70	2	grey	–	34579-231	–
160	2	red	24560-351	64560-001	64560-074
220	2	red	24560-353	64560-002	64560-075
280	2	red	24560-379	–	–
340	2	red	24560-380	–	–
160	2.5	red	–	64560-096	–
220	2.5	red	–	64560-098	–

Accessories

Retention screw, PU 100 pieces; Torque max. 0.2 Nm 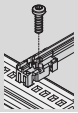	24560-141	–	24560-141
ESD clip, PU 50 pieces	24560-255		24560-255

1) SPQ (standard pack quantity): Part number includes 1 piece, but delivery is exclusively made in standard pack quantity (SPQ); please order at least the SPQ quantity or a multiple

2) Part no. includes one packing unit (PU); delivery is exclusively made in PU

Description of accessories see from page 6.41

Guide rails type "accessory", one-piece, groove width 2 mm and 2.5 mm

Order Information

Assembly
- can be clipped into Al extruded horizontal rails
- can be clipped into 1.5 mm thick plates

Storage temperature
from -40 °C ... +130 °C

Board length mm	Groove width mm	Colour	Guide rails: accessory type, PU 10 pieces[2]	Guide rails: accessory type, 1 piece (SPQ 50)	Guide rails: accessory type, strengthened, 1 piece (SPQ 50)	Guide rails: for heavy modules, Al extrusion, silver, robust version, 1 piece (SPQ 10)[1]
			 06102002 up to 280 mm length, PBT, UL 94 V-0; > 280 mm length, multi-piece, end piece PBT, UL 94 V-0, middle section Al extrusion		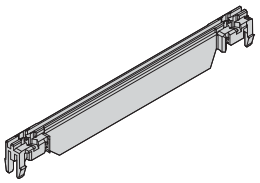 06102005 PBT UL 94 V-0, red; support beam of guide rails adds to strengthening	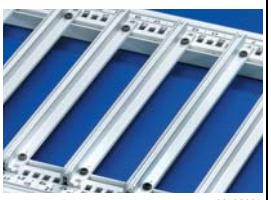 06102005 Al extrusion; is screwed to horizontal rail "heavy" with retention screws
100	2	red	–	64560-082	–	–
160	2	red	24560-373	64560-005	64560-076	–
160	2	grey/silver	–	64560-055	–	34562-881
220	2	red	24560-374	64560-006	64560-078	–
220	2	grey/silver	–	64560-166	–	34562-882
280	2	red/silver	24560-375	–	64560-080	34562-883
340	2	red/silver	24560-376	–	–	34562-884
400	2	red/silver	–	–	–	34562-885
160	2.5	silver	–	–	–	34564-881
220	2.5	silver	–	–	–	34564-882
280	2.5	silver	–	–	–	34564-883
340	2.5	silver	–	–	–	34564-884
400	2.5	silver	–	–	–	34564-885

Accessories

Retention screw, PU 100 pieces; torque max. 0.2 Nm 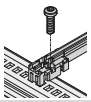	24560-141	24560-141	24560-141	24560-157
ESD clip, PU 50 pieces	24560-255	24560-255	24560-255	–
Board locking, red, PU 10 pieces	24560-377	24560-377	24560-377	–
Board handle, red, PU 10 pieces	24560-378	24560-378	24560-378	–
Identification strips for board handle, red, PU 1 sheet = 438 pieces	60817-228	60817-228	60817-228	–
Coding see page	6.41			–

1) SPQ (standard pack quantity): Part number includes 1 piece, but delivery is exclusively made in standard pack quantity (SPQ); please order at least the SPQ quantity or a multiple

2) Part no. includes one packing unit (PU); delivery is exclusively made in PU

Description of accessories see from page 6.41

Guide rails for CompactPCI, VME64x with coding, 4.4" PCBs, groove width 2 mm and 2.5 mm

Order Information

Assembly
- can be clipped into Al extruded horizontal rails
- can be clipped into1.5 mm thick plates

Storage temperature
from -40 °C ... 130 °C

For CompactPCI, VME64x with coding

In accordance with IEEE 1101.10 and IEC 60297-3-103

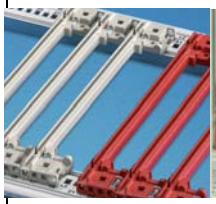

06106001



04611009

One-piece for groove width 2 mm, PBT, UL 94 V-0; multi-piece at groove width 2,5 mm, end-piece PBT, UL 94 V-0, center piece Al

PBT, UL 94 V-0

Offset 0.1" for power supply units in accordance with IEEE 1101.10 and IEC 60297-3-103

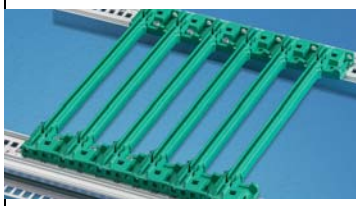

06106002

PBT, UL 94 V-0, for installation of power supplies in CompactPCI systems or plug-in units with SMD placement

For 4.4" PCBs

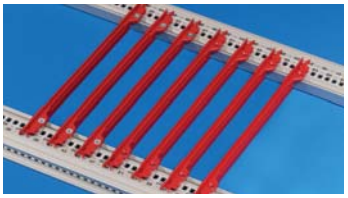

06104009

One-piece, PBT, UL 94 V-0; for 4.4" PCBs or drive unit modules

Board length mm	Groove width mm	Colour mm	PU 10 pieces	1 piece (SPQ 50)[1]	PU 10 pieces	1 piece (SPQ 50)[1]	PU 10 pieces	1 piece (SPQ 50)[1]
70	2	red	24560-355	64560-085	–	–	–	–
70	2	grey	24560-360	64560-086	–	–	–	–
160	2	red	24560-356	64560-089	–	–	24560-361	64560-143
160	2	grey	24560-358	64560-090	–	–	–	–
160	2	green	–	–	24560-359	64560-071	–	–
220	2	red	–	64560-091	–	–	24560-362	64560-144
220	2	grey	–	64560-092	–	–	–	–
220	2	green	–	–	–	64560-072	–	–
160	2.5	red	–	–	–	–	–	64560-145
220	2.5	red	24561-330	–	–	–	–	64560-146
220	2.5	grey	24561-340	–	–	–	–	–
280	2.5	red	24561-331	–	–	–	–	–
280	2.5	grey	24561-341	–	–	–	–	–
340	2.5	red	24561-332	–	–	–	–	–
340	2.5	grey	24561-342	–	–	–	–	–

Accessories

ESD clip, PU 50 pieces	24560-255	24560-255	–	–	–	–
ESD clips, for alignment pin, PU 50 pieces	24560-256	24560-256	24560-256	24560-256	–	–
Retention screw, PU 100 pieces; torque max. 0.2 Nm	24560-141	24560-141	24560-141	24560-141	24560-158	24560-158
Coding peg, PU 100 pieces	20817-501	20817-501	20817-501	20817-501	–	–

1) SPQ (standard pack quantity): Part number includes 1 piece, but delivery is exclusively made in standard pack quantity (SPQ); please order at least the SPQ quantity or a multiple

2) Part no. includes one packing unit (PU); delivery is exclusively made in PU

Description of accessories see from page 6.41

Guide rails, multi-piece, groove width 2 mm

Order Information

PCBs:
Fixed lengths for 160, 220, 280, 340 mm; length 1000 mm for special dimensions

Mounting: pluggable into horizontal rails

Storage temperature :
End piece -40°C ... +130°C
PVC profile 0°C ... +60°C

Description	Length mm	Groove width mm	For plug-in units and modules standard type		Accessories type		For 4.4" PCBs	
			 06106004		 06106005		 06106006	
			end piece, PBT, UL 94 V-0, middle section Al extrusion	end piece, PBT, UL 94 V-0, middle section plastic extrusion (PVC, RAL 7035)	end piece, PBT, UL 94 V-0, middle section Al extrusion	end piece, PBT, UL 94 V-0, middle section plastic extrusion (PVC, RAL 7035)	end piece, PBT, UL 94 V-0, middle section Al extrusion	end piece, PBT, UL 94 V-0, middle section plastic extrusion (PVC, RAL 7035)
			1 piece (SPQ 10)[1)]	1 piece (SPQ 10)[1)]	1 piece (SPQ 10)[1)]	1 piece (SPQ 10)[1)]	1 piece (SPQ 10)[1)]	1 piece (SPQ 10)[1)]
End piece, red, 1 pair		2	64560-004	64560-004	64560-008	64560-008	64560-057	64560-057
Al extrusion, for 160 mm board length	95	2	34560-891	34564-891	34560-891	34564-891	34560-891	34564-891
Al extrusion, for 220 mm board length	155	2	34560-892	34564-892	34560-892	34564-892	34560-892	34564-892
Al extrusion, for 280 mm board length	215	2	34560-893	34564-893	34560-893	34564-893	34560-893	34564-893
Al extrusion, for 340 mm board length	275	2	34560-894	–	34560-894	–	34560-894	–
Al extrusion, for any board length	1000	2	34560-900	–	34560-900	–	34560-900	–
Plastic extrusion, for any board length	1000	2	–	34564-900	–	34564-900	–	34564-900

Accessories

ESD clip, PU 50 pieces			24560-255	24560-255	24560-255	24560-255	–	–
Retention screw, PU 100 pieces; torque max. 0.2 Nm			24560-141	24560-141	24560-141	24560-141	24560-158	24560-158
Board locking, red, PU 10 pieces			–	–	24560-377	24560-377	–	–
Board handle, red, PU 10 pieces			–	–	24560-378	24560-378	–	–
Identification strips for board handle, red, PU 1 sheet = 438 pieces			–	–	60817-228	60817-228	–	–
Coding see page			–	–	see page 6.41		–	–

1) SPQ (standard pack quantity): Part number includes 1 piece, but delivery is exclusively made in standard pack quantity (SPQ); please order at least the SPQ quantity or a multiple

2) Part no. includes one packing unit (PU); delivery is exclusively made in PU

Description of accessories see from page 6.41

Note

- Strengthening for middle section (plastic extrusion) available on request

Dimension drawings of guide rails

Standard

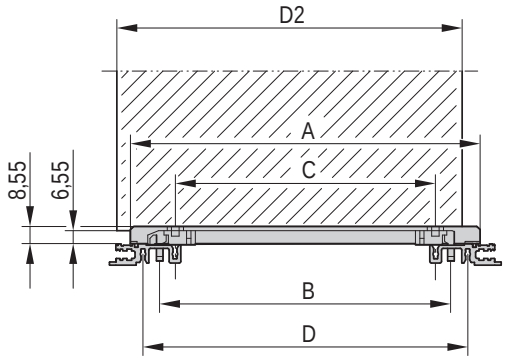

Robust version

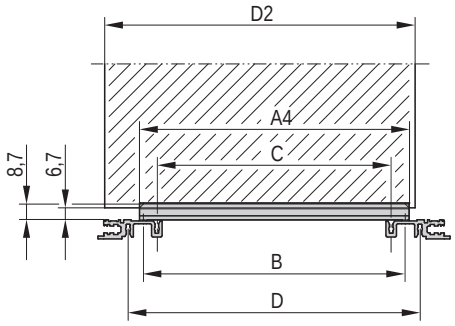

For accessories

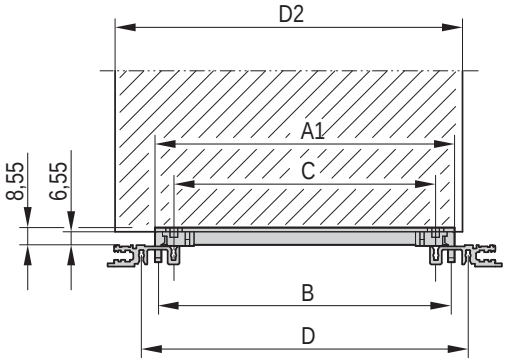

For accessories, strengthened

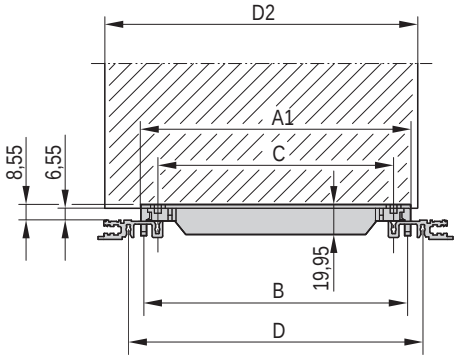

CompactPCI, VME64x

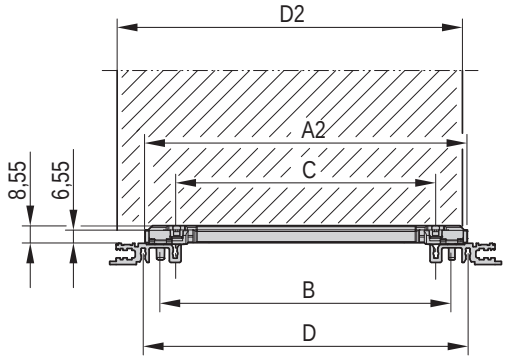

4.4" (111.7 mm)

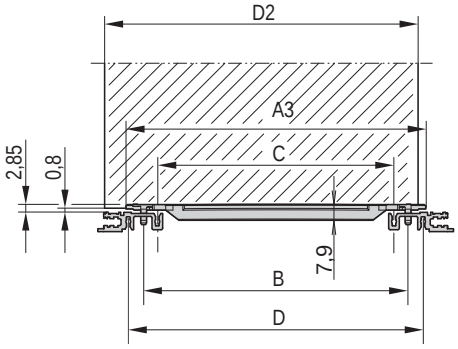

Dimensions table

Board length	Dimensions							
L	**A**	**A1**	**A2**	**A3**	**A4**	**B**	**C**	**D**
mm	**mm**	**mm**	**mm**	**mm**	**mm**	**mm**	**mm**	**mm**
70	71.5	47.9	59.39	63	49	45	30	60
100	101.5	77.9	89.39	93	79	75	60	90
160	161.5	137.9	149.39	153	139	135	120	150
220	221.5	197.9	209.39	213	199	195	180	210
280	281.5	257.9	269.39	273	259	255	240	270
340	341.5	317.9	322.39	333	319	315	300	330
400	401.5	377.9	389.39	393	379	375	360	390

A, A1, A2, A3, A4: Length of rail
B: Pitch of snap-in fixing
C: Pitch of guide rail retention screws
D: Pitch of horizontal rail retention screws

Part number in bold face type: ready for despatch within 2 working days
Part number in normal type: ready for despatch within 10 working days

Guide rail accessories

Order Information

Assembly	Colour	ESD clips, CompactPCI/VME 64 alignment pin for guide rails	Coding for subracks: Keying/coding block for guide rails accessory type	Coding for subracks: Keying/coding for CompactPCI, VME64x handles to IEEE 1011.10 and IEC 60297-3-103
		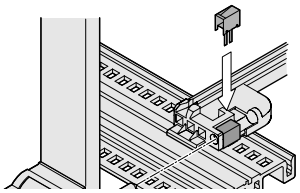 06103052	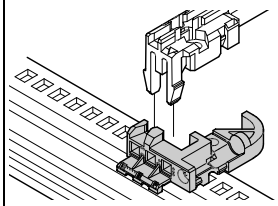 06103051	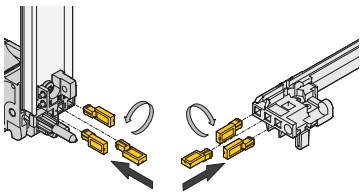 04612052
		Spring steel, tin-plated, ESD clip, for alignment pin in accordance with IEEE; can be plugged into the guide rails with coding and into the keying/coding block; provides conductive contact between the alignment pin of the insertion/extractor handle (IEL or IET handle) and the horizontal rail	PBT, UL 94 V-0, keying/coding block is clipped into the horizontal rail next to the guide rail; please order keying/coding pegs separately	Keying/coding peg, PBTP, UL 94 V-0, RAL 7035 The keying/coding pegs prevent plug-in units to be mounted in wrong slots. They are inserted in the chambers of the codable card guides as well as in the insertion/extractor handles IEL or IET (4 possible positions), resulting in 64 codings per card guide; when coding the upper and lower card guide, 4096 codings will result;
		PU 50 pieces	1 piece (SPQ 50)	PU 100 pieces
above	red	–	34579-232	–
	grey	–	34579-233	20817-501
	silver	24560-256	–	–
below	red	–	34579-234	–
	grey	–	34579-235	20817-501
	silver	24560-256	–	–

1) SPQ (standard pack quantity): Part number includes 1 piece, but delivery is exclusively made in standard pack quantity (SPQ); please order at least the SPQ quantity or a multiple

2) Part no. includes one packing unit (PU); delivery is exclusively made in PU

Guide rail accessories

Order Information

Assembly / Colour / mm	ESD clips for guide rails	Board locking for PCBs without front panel; for accessory type guide rails	PCB handle for board locking; for accessory type guide rails	Identification strips
	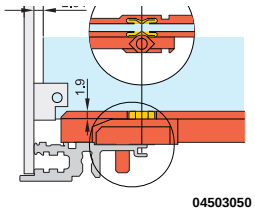 04503050	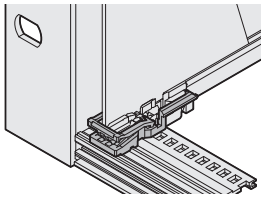 04805050	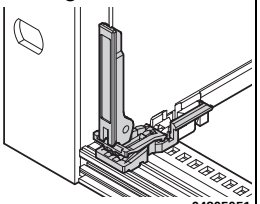 04805051	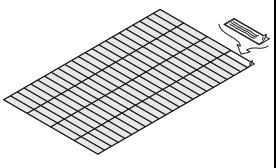 06108076
	Spring steel, tin-plated, provides conductive contact between board and horizontal rail, on both the solder side and the component side	PBT, UL 94 V-0, red, to fix the PCB in the subrack (also slot 1), can also be used without board handle, minimum distance 3 HP	PBT, UL 94 V-0, red, insertion/ extraction function with connection to board locking (also slot 1), mounting directly behind front panel (above and below), minimum distance 3 HP	Polyester film, 31 x 4 mm, self-adhesive, white/matt (1 A4 sheet contains 438 pieces)
	silver	**red**	**red**	**white/matt**
	PU 50 pieces	PU 10 pieces	PU 10 pieces	1 piece
above/below	24560-255	24560-377	24560-378	60817-228

Shielding for top and bottom

Cover plates can be used for electromagnetic shielding (with EMC contact springs) or as mechanical protection (without EMC springs)

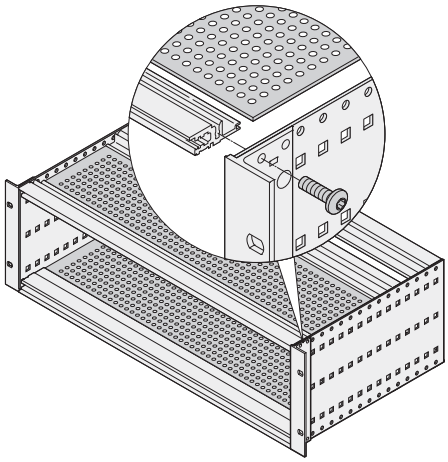

06108077

Cover plates for mechanical protection

- Cover plates are inserted into the grooves of the front and rear horizontal rails, type L "light"

see page 6.43

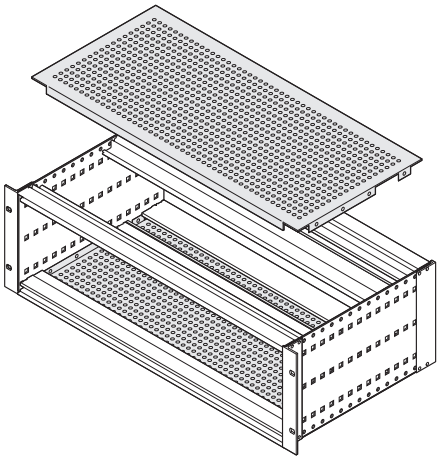

06102084

Cover plates with EMC shielding and mechanical protection

EMC cover plates for top and bottom

- Inserted in the groove of the front and rear horizontal rails; shielding with contact springs, lateral contact by bolting the bracket to the side panel
- Used when standard-depth PCBs (160, 220, 280, ...) are fitted

see page 6.44

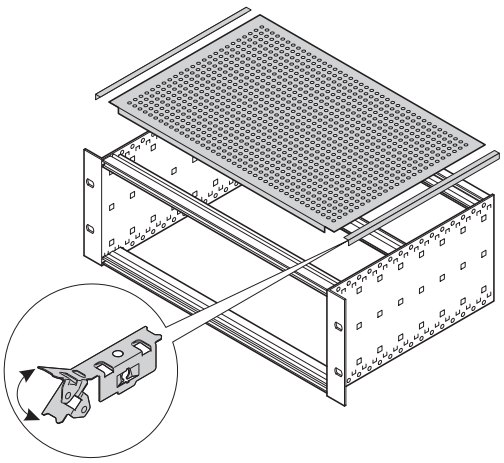

06105082

Universal EMC cover plates for top and bottom

- Inserted in the groove of the front and rear horizontal rails; shielding with contact springs, lateral contact by bolting to the side panel with special contact springs
- Used when PCBs with special dimensions are fitted

see page 6.45

Cover plates for mechanical protection (insertion into horizontal rail type L

Order Information

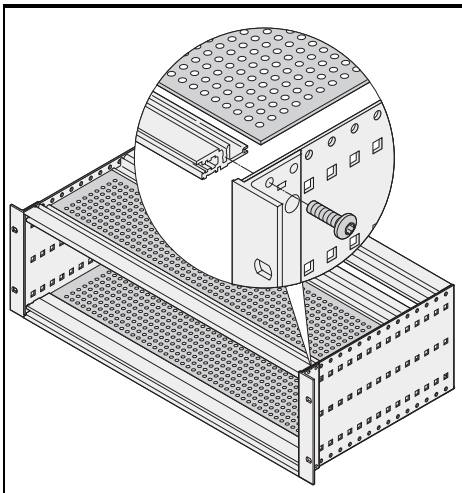

06197010

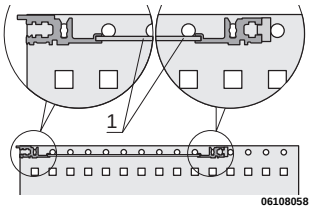

06108058

Cover plates for insertion into horizontal rail type L

Perforated Al plate, 1.2 mm, hole diameter 3.8 mm, Al, untreated, perforation degree 60 %; for insertion into the groove of the light horizontal rails (type L)

Width HP	Depth mm	Application	PU 1 pair
42	175	160 mm board depth	24561-031
63	175	160 mm board depth	24561-041
84	175	160 mm board depth	24561-051
84	235	220 mm board depth	24561-052

Note

- Other dimensions on request

EMC cover plates and mechanical protection

- Cover plate for bolting to side panel
- Used when standard-depth PCBs (160, 220, 280, ...) are fitted

Order Information

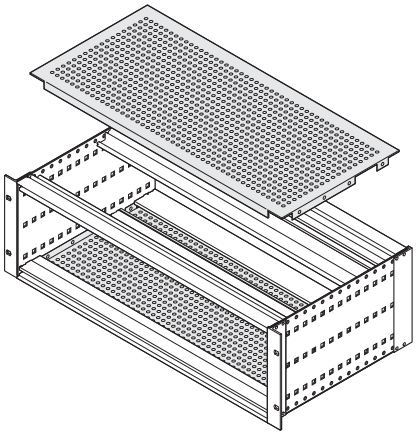

06197010

Cover plate for bolting to side panel

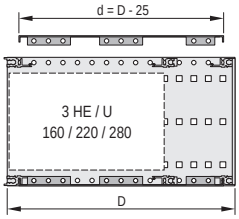

06102082

Al, 1.0 mm, hole diameter 4.0 mm, passivated, perforation degree 58 %, incl. fixing screws; for shielding 4 stainless steel EMC gaskets are required per subrack

Stainless steel EMC gasket, between cover plate and horizontal rail

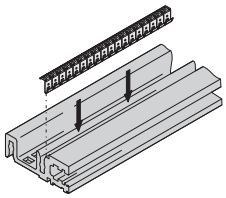

06106052

stainless steel EMC gasket, clips into the horizontal rail and forms the contact with the cover plate; suitable for all horizontal rails

Width HP	Depth mm	Application	PU 1 pair	PU 10 pieces	PU 100 pieces
42	175	160 mm board depth	24560-064	24560-241	–
42	235	160, 220 mm board depth	24560-065		
42	275	160, 220 mm board depth CompactPCI (275 mm)	24560-061		
42	277.75	160, 220 mm board depth VME64x (277.75 mm)	24579-090		
42	295	160, 220, 280 mm board depth	24560-066		
63	175	160 mm board depth	24560-071	24560-243	–
63	235	160, 220 mm board depth	24560-072		
63	275	160, 220 mm board depth CompactPCI (275 mm)	24560-062		
63	295	160, 220, 280 mm board depth	24560-073		
84	175	160 mm board depth	24560-078	24560-245	24560-246
84	235	160, 220 mm board depth	24560-079		
84	275	160, 220 mm board depth CompactPCI (275 mm)	24560-063		
84	277.75	160, 220 mm board depth VME64x (277.75 mm)	24579-092		
84	295	160, 220, 280 mm board depth	24560-080		
84	355	160, 220, 280 mm board depth	24560-081		
84	415	160, 220, 280 mm board depth	24560-082		
84	475	160, 220, 280 mm board depth	24560-083		
Assembly tool, for EMC gasket, stainless steel (horizontal rails), 1 piece 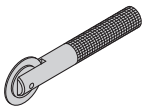			–	24560-271	

Note

- Cover plates without perforation available on request

Universal EMC cover plates and mechanical protection

■ Used when PCBs with special dimensions are fitted

Order Information

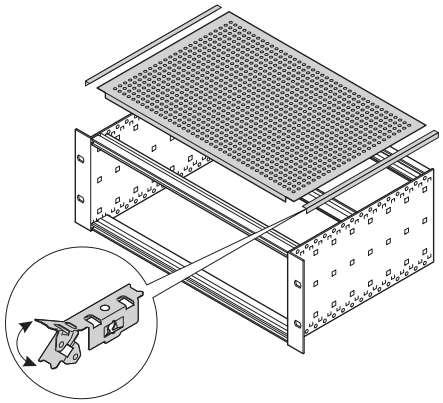

06105082

Universal cover plate

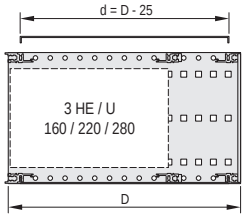

06108079

Al, 1.0 mm, hole diameter 4.0 mm, passivated, perforation degree 58 %, incl. lateral EMC sealing, incl. fixing screws

Stainless steel EMC gasket, between cover plate and horizontal rail

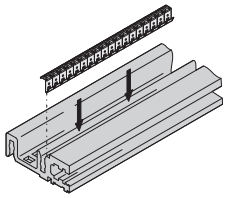

06106052

stainless steel EMC gasket, clips into the horizontal rail and forms the contact with the cover plate; suitable for all horizontal rails

Width HP	Depth mm	Application	PU 1 pair	PU 10 pieces	PU 100 pieces
42	175	160 mm board depth	24560-031	24560-241	–
42	235	160, 220 mm board depth	24560-032		
42	295	160, 220, 280 mm board depth	24560-033		
63	175	160 mm board depth	24560-041	24560-243	–
63	235	160, 220 mm board depth	24560-042		
63	295	160, 220, 280 mm board depth	24560-043		
84	175	160 mm board depth	24560-051	24560-245	24560-246
84	235	160, 220 mm board depth	24560-052		
84	295	160, 220, 280 mm board depth	24560-053		
84	355	160, 220, 280 mm board depth	24560-054		
84	415	160, 220, 280 mm board depth	24560-055		
84	475	160, 220, 280 mm board depth	24560-056		
Assembly tool, for EMC gasket, stainless steel (horizontal rails), 1 piece 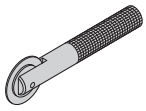			–	24560-271	

Cover/shielding to front and rear

- The front and rear sides of the subrack can be shielded by a hinged front panel or by a fixed front panel and 19" brackets
- The rear can be shielded with a front panel and a corner profile

Rear hood

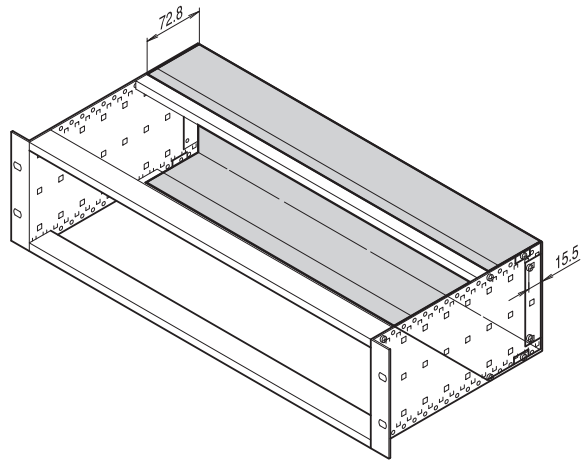

BZA45814

Front panel for front and rear

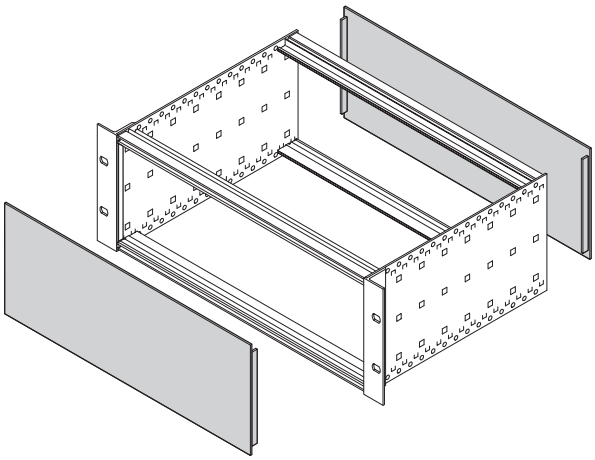

06112089

Front panel, hinged/pivoted

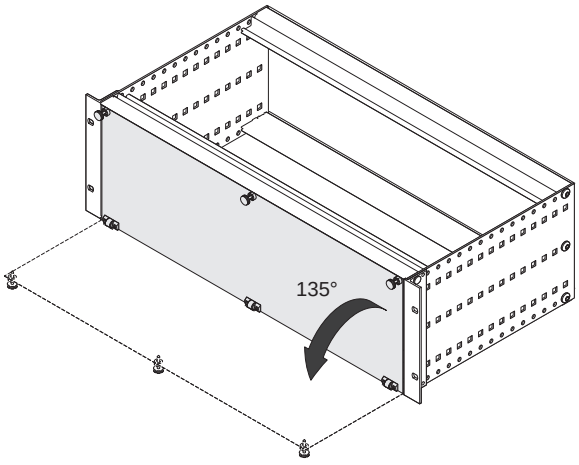

06112090

Part number in bold face type: ready for despatch within 2 working days
Part number in normal type: ready for despatch within 10 working days

Rear hood for 3 U and 6 U subracks (for stainless steel EMC gasket)

Order Information

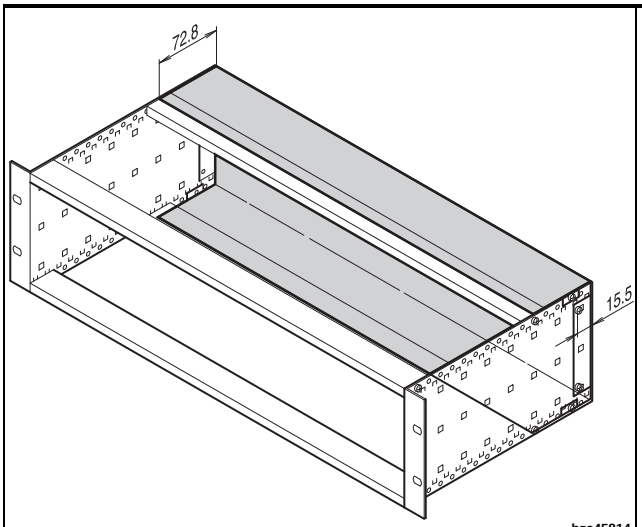

Rear hood

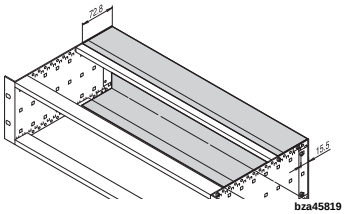

Al, 1 mm, clear passivated;
60 mm additional side panel depth required (board depth + 60 mm);
for shielding please order EMC gasket for horizontal rail separately;
cannot be used simultaneously with rear corner profile

Stainless steel EMC gasket, between cover plate and horizontal rail

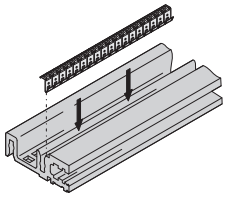

stainless steel EMC gasket,
clips into the horizontal rail and forms the contact with the cover plate;
suitable for all horizontal rails

Height U	Width HP	1 piece	PU 10 pieces	PU 100 pieces
3	42	34561-750	24560-241	–
3	84	34561-752	24560-245	24560-246
6	63	34561-763	24560-243	–
6	84	34561-764	24560-245	24560-246
Torx panhead screw, M4 × 6, St, zinc-plated, PU 100 pieces		24560-135	–	
Assembly tool, for EMC gasket, stainless steel (horizontal rails), 1 piece 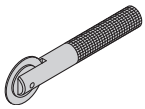		–	24560-271	

Note

- Other dimensions of rear hood available on request

Front/rear panels, unshielded

FRONT PANEL EXPRESS

Order Information



04292001

Height U	Height mm	Width HP	Front panel: pre-anodised, cut edges plain, Al, 2.5 mm – 1 piece	Front panel: pre-anodised, cut edges plain, Al, 2.5 mm – 1 piece (SPQ 5)[1)]	Front panel: anodised, Al, 2.5 mm – 1 piece	Front panel: anodised, Al, 2.5 mm – 1 piece (SPQ 5)[1)]	Front anodised, rear iridescent green chromated, Al, 2.5 mm – 1 piece	Front anodised, rear iridescent green chromated, Al, 2.5 mm – 1 piece (SPQ 5)[1)]
1	44.45	28	–	–	–	–	20850-423	–
1	44.45	42	–	–	–	–	20850-424	–
1	44.45	63	–	–	–	–	20850-425	–
1	44.45	84	–	–	–	–	20850-426	–
2	84.0	84	30818-271	–	30807-416	–	30847-461	–
3	128.4	2	–	30810-433	–	30810-432	–	30847-470
3	128.4	3	–	30818-272	–	30807-508	–	30847-471
3	128.4	4	–	30818-273	–	30807-481	–	30838-043
3	128.4	5	–	30818-274	–	30807-510	–	30838-044
3	128.4	6	–	30818-275	–	30807-482	–	30838-045
3	128.4	7	–	30818-276	–	30807-509	–	30838-046
3	128.4	8	–	30818-277	–	30807-484	–	30838-047
3	128.4	10	–	30818-279	–	30807-483	–	30838-049
3	128.4	12	–	30818-281	–	30807-485	–	30838-051
3	128.4	14	–	30818-282	–	30807-501	–	30838-053
3	128.4	21	–	30818-289	–	30807-487	–	30838-060
3	128.4	28	–	30818-296	–	30807-496	–	30838-067
3	128.4	42	30818-310	–	30807-494	–	30838-081	–
3	128.4	63	30818-331	–	30808-067	–	30838-102	–
3	128.4	84	30818-352	–	30807-506	–	30838-123	–
4	172.9	42	–	–	–	–	30847-463	–
4	172.9	63	–	–	–	–	30847-464	–
4	172.9	84	30818-434	–	30807-596	–	30847-465	–
6	261.8	2	–	30818-747	–	30818-741	–	30847-472
6	261.8	4	–	30818-518	–	–	–	30838-124
6	261.8	5	–	–	–	–	–	30838-125
6	261.8	6	–	–	–	–	–	30838-126
6	261.8	7	–	–	–	–	–	30838-127
6	261.8	8	–	30818-522	–	–	–	30838-128
6	261.8	10	–	30818-524	–	30807-753	–	30838-130
6	261.8	12	–	30818-526	–	–	–	30838-132
6	261.8	14	–	30818-528	–	30807-758	–	30838-134
6	261.8	16	–	30818-530	–	–	–	30838-136
6	261.8	21	–	30818-535	–	30807-757	–	30838-141
6	261.8	28	–	30818-542	–	30807-766	–	30838-148
6	261.8	42	30818-556	–	30807-764	–	30838-162	–
6	261.8	63	30818-577	–	30807-771	–	30838-183	–
6	261.8	84	30818-598	–	30807-776	–	30838-204	–
9	395.1	4	–	–	–	–	–	30847-476
9	395.1	8	–	–	–	–	–	30847-480
9	395.1	10	–	–	–	–	–	30847-482
9	395.1	12	–	–	–	–	–	30847-484
9	395.1	84	–	–	–	–	30847-556	–

■Front panel assembly kits, sleeves, collar screws, quick-release fasteners see page 6.63

1) SPQ (standard pack quantity): Part number includes 1 piece, but delivery is exclusively made in standard pack quantity (SPQ); please order at least the SPQ quantity or a multiple

Part number in bold face type: ready for despatch within 2 working days
Part number in normal type: ready for despatch within 10 working days

Front/rear panels shieldable with stainless steel EMC gasket

FRONT PANEL EXPRESS

Order Information



04292001

Height U	Height mm	Width HP	Front panel: Front panel for shielding with EMC gasket (stainless steel) — Al, 2.5 mm, front anodized, rear iridescent green chromated, 2 alignment pins pressed-in, St, stainless — 1 piece	Front panel: Front panel for shielding with EMC gasket (stainless steel) — Al, 2.5 mm, front anodized, rear iridescent green chromated, 2 alignment pins pressed-in, St, stainless — 1 piece (SPQ 5)[1)]	Stainless steel EMC gasket — inserted laterally into the grooves of the front panel, suited for temperatures above 70 °C — PU 10 pieces	Stainless steel EMC gasket — inserted laterally into the grooves of the front panel, suited for temperatures above 70 °C — PU 100 pieces
2	84	84	30846-588	–	21101-775	21101-776
3	128.4	2	–	30846-864		
3	128.4	3	–	20846-425		
3	128.4	4	–	20846-426		
3	128.4	5	–	20846-427		
3	128.4	6	–	20846-428		
3	128.4	7	–	20846-429		
3	128.4	8	–	20846-430		
3	128.4	10	–	20846-431	21101-705	21101-706
3	128.4	12	–	20846-432		
3	128.4	14	–	20846-433		
3	128.4	21	–	20846-434		
3	128.4	28	–	20846-436		
3	128.4	42	20846-437	–		
3	128.4	63	20846-438	–		
3	128.4	84	30846-676	–		
4	172.9	42	30846-681	–		
4	172.9	63	30846-682	–	21101-713	21101-714
4	172.9	84	30846-683	–		
6	261.8	2	–	30846-865		
6	261.8	4	–	20846-443		
6	261.8	5	–	20846-444		
6	261.8	6	–	20846-445		
6	261.8	7	–	20846-446		
6	261.8	8	–	20846-447		
6	261.8	10	–	20846-448		
6	261.8	12	–	20846-449	21101-707	21101-708
6	261.8	14	–	20846-450		
6	261.8	16	–	20846-456		
6	261.8	21	–	20846-451		
6	261.8	28	–	20846-452		
6	261.8	42	20846-453	–		
6	261.8	63	20846-454	–		
6	261.8	84	30846-771	–		
9	395.1	84	30846-859	–	21101-709	21101-710
Assembly tool, for stainless steel EMC gasket					24560-270	

■Front panel assembly kits, sleeves, collar screws, quick-release fasteners see page 6.63

1) SPQ (standard pack quantity): Part number includes 1 piece, but delivery is exclusively made in standard pack quantity (SPQ); please order at least the SPQ quantity or a multiple

Front/rear panels shieldable with textile EMC gasket

FRONT PANEL EXPRESS

Order Information



04292001

Height U	Height mm	Width HP	Front panel: Front panel for shielding with EMC sealing (textile) — Al extrusion, 2.5 mm, front anodised,rear conductive; 3, 6 U with alignment pin (not 84 HP): 1 piece	Front panel: Front panel for shielding with EMC sealing (textile): 1 piece (SPQ 5)[1)]	Textile EMC gasket — textile gasket, core: foam, sleeve: textile cladding with CuNi coating, UL 94 V-0: PU 10 pieces	Textile EMC gasket: PU 100 pieces
2	84	84	20848-262	–	–	21101-856
3	128.4	2	–	30849-001	21101-853	21101-854
3	128.4	3	–	30849-004		
3	128.4	4	–	30848-354		
3	128.4	5	–	30848-378		
3	128.4	6	–	30848-380		
3	128.4	7	–	30848-382		
3	128.4	8	–	30848-356		
3	128.4	10	–	30848-386		
3	128.4	12	–	30848-358		
3	128.4	14	–	20848-013		
3	128.4	21	–	20848-020		
3	128.4	28	–	20848-027		
3	128.4	42	20848-047	–		
3	128.4	63	20848-068	–		
3	128.4	84	20848-097	–		
4	172.9	28	–	20848-268	21101-858	–
4	172.9	42	20848-269	–		
4	172.9	63	20848-270	–		
4	172.9	84	20848-271	–		
6	261.8	2	–	30849-002	21101-855	21101-856
6	261.8	4	–	30848-355		
6	261.8	5	–	30848-379		
6	261.8	6	–	30848-381		
6	261.8	7	–	30848-383		
6	261.8	8	–	30848-357		
6	261.8	10	–	30848-387		
6	261.8	12	–	30848-359		
6	261.8	14	–	20848-106		
6	261.8	16	–	20848-108		
6	261.8	21	–	20848-113		
6	261.8	28	–	20848-120		
6	261.8	42	20848-139	–		
6	261.8	63	20848-160	–		
6	261.8	84	20848-189	–		
9	395.1	84	20848-280	–	21101-859	21101-904

■Front panel assembly kits, sleeves, collar screws, quick-release fasteners see page 6.63

1) SPQ (standard pack quantity): Part number includes 1 piece, but delivery is exclusively made in standard pack quantity (SPQ); please order at least the SPQ quantity or a multiple

Front panels, hinged and pivoted

Order Information

		Front panel, bottom-hinged		Front panel, pivoted
		shielded	unshielded	
		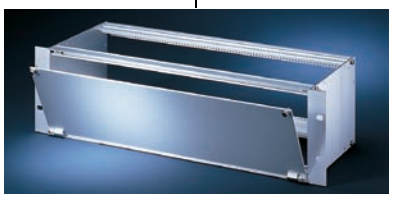 04295001		 04295002
		Al, 2.5 mm, front anodised, rear iridescent green chromated; hinge, Zn die-cast, nickel-plated; 2 x sleeve, PA; 2 x knurled screws M2.5 x 12.3, St, nickel-plated; 1 x textile EMC gasket	Al, 2.5 mm, anodised, cut edges plain; hinge, Zn die-cast, nickel-plated; 2 x sleeve, PA; 2 knurled screws M2.5 x 12.3, St, nickel-plated	Al, 2.5 mm, front anodised, rear iridescent green chromated; hinge, die-cast zinc, chrome-plated; textile EMC gasket
Height	**Width**			
U	**HP**	**1 piece**	**1 piece**	**1 piece**
3	28	20848-608	20838-280	–
3	42	20848-599	20838-271	–
3	63	20848-600	20838-272	–
3	84	20848-601	20838-273	20848-611
4	42	20848-605	20838-277	–
4	63	20848-606	20838-278	–
4	84	20848-607	20838-279	–
6	28	20848-696	–	–
6	42	20848-602	20838-274	–
6	63	20848-603	20838-275	–
6	84	20848-604	20838-276	20848-617

Note

- Front panel can be removed in opened position (> 135°)

Shielding is required between the following components of a subrack

- Front panel/rear panel and horizontal rail, see page 6.53
- Front panel and 19" bracket/corner profile or in case of depth-offset installation, see page 6.53
- Cover plate/horizontal rail, see page 6.42
- Cover plate/side panel, see from page 6.42
- Horizontal rail/horizontal rail in combined mounting (3 U + 3 U and 6 U), see page 6.57
- Shielding for backplane and side panel see page 6.53

EMC shielding concepts

- Shielding concepts in accordance with IEEE and IEC
- Shielding effectiveness has been determined in various series of measurements in accordance with IEC 61587-3 and can be found online together with the relevant standard product
- The combined use of stainless steel and textile EMC gaskets is functionally possible without any problems

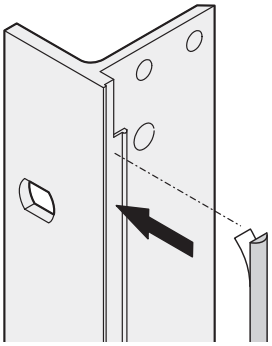

06108073

EMC shielding concept with EMC textile gaskets

- The seal is affixed to the left-hand side of the subrack (viewed from front) or to the front panel profile, respectively
- An EMC gasket with CuNi coating assures a long-term high level of shielding, typically 40 dB at 2 GHz
- Temperature-resistant adhesive layer is protected by a removable film
- Rear shielding is obtained using front panels or a rear hood
- Temperature range -40° C ... +70° C
- **Note:** rear hood and corner profile cannot be used simultaneously

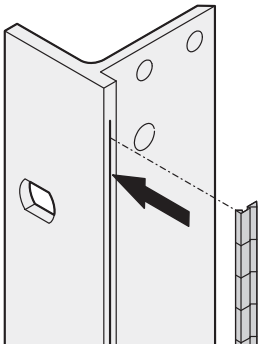

06108074

EMC shielding concept with stainless steel EMC gaskets)

- Symmetrical arrangement of EMC gaskets on the left and right hand sides of subrack and front panel
- Shielding: typically 40 dB at 2 GHz
- Can be used for temperatures above +70° C
- **Note:** rear hood and corner profile cannot be used simultaneously

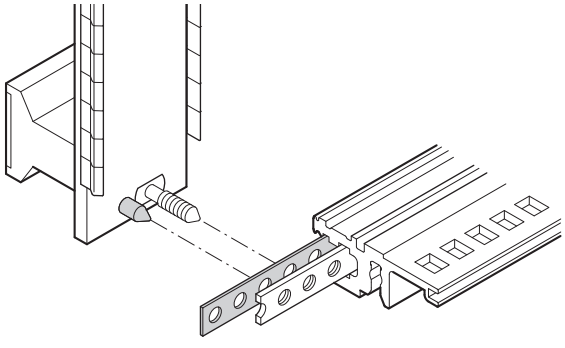

06112091

Front panel shielding concept

- Front panels are available for textile or stainless steel EMC gasket options
- Alignment pins are pressed-in in the front panel to position the gaskets securely and to compress them evenly
- An alignment pin positions the perforated strip in the horizontal rail
- Alignment pin and perforated strip provide an optimal positioning of the shielded assemblies; the front panels are not forced sideways by the shielding elements (Schroff patent)

EMC gaskets between front/rear panel and horizontal rail

Order Information

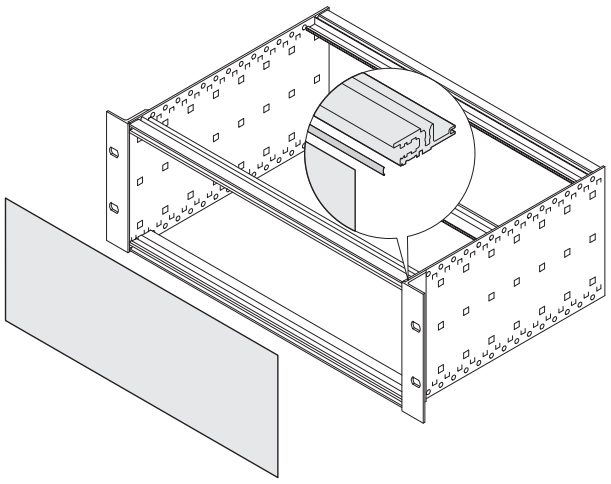

Stainless steel EMC gasket between front panel/rear panel and horizontal rail

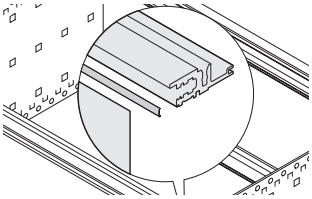

stainless steel; for front and rear horizontal rails (type VT)

Width HP	Depth mm	PU 10 pieces	PU 100 pieces
28	131.8	24560-229	–
42	202.9	24560-231	–
63	304.5	24560-233	–
84	416.6	24560-235	24560-236

EMC gaskets between front panel and 19" bracket/corner profile

Order Information

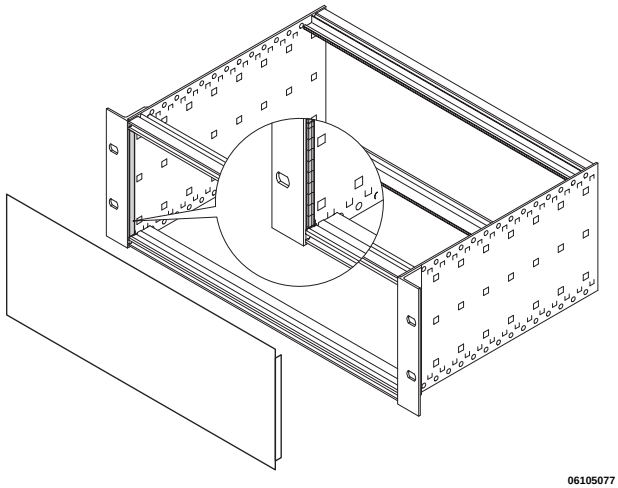

Stainless steel EMC gasket between front panel/rear panel and 19" bracket/corner profile

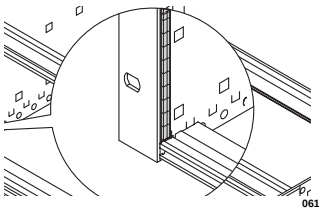

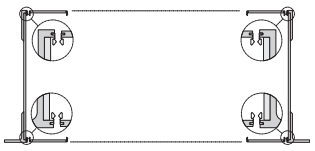

inserted laterally into the grooves of the front panel

Textile EMC gasket between front panel/rear panel and 19" bracket/corner profile

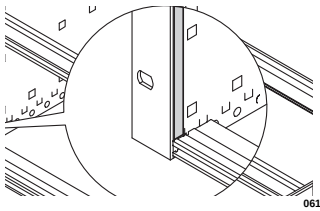

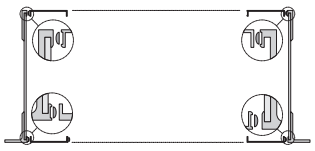

textile gasket, core: foam, sleeve: textile cladding with CuNi coating, UL 94 V-0

Height U	Depth mm	PU 10 pieces	PU 100 pieces	PU 10 pieces	PU 100 pieces
3	97.5	21101-705	21101-706	21101-853	21101-854
4	142.5	21101-713	21101-714	21101-858	–
6	232.5	21101-707	21101-708	21101-855	21101-856
9	365.0	21101-709	21101-710	21101-859	21101-904
Assembly tool, for stainless steel EMC gasket 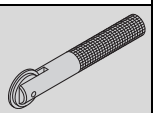		24560-270		–	

EMC gaskets between horizontal rail and horizontal rail

Order Information

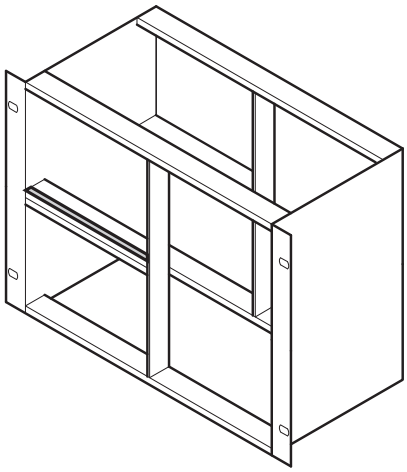

bpa46548

Stainless steel EMC gasket between horizontal rail and horizontal rail

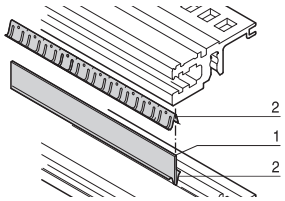

bza45877

Item 1: cover strip, Al, 1 mm,
item 2: 2 x EMC seals (stainless steel);
for shielding of 2 horizontal rails positioned directly one above the other
if assembly area is divided vertically

Width HP	Depth mm	PU 1 kit
20	107.0	24562-520
28	147.0	24562-528
40	208.0	24562-540
42	218.0	24562-542
63	325.0	24562-563
84	431.0	24562-584

1) SPQ (standard pack quantity): Part number includes 1 piece, but delivery is exclusively made in standard pack quantity (SPQ);
please order at least the SPQ quantity or a multiple

EMC gaskets between front panel and side panel (depth-offset installation)

Order Information

Stainless steel EMC gasket between front panel and side panel (depth-offset installation)

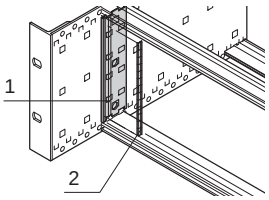

bpa45884

Item 1: 2 x support profiles, Al extrusion;
item 2: 2 x stainless steel EMC gasket;
fixing material kit for vertical EMC shielding between depth-offset shielded front panels and side panel

Textile EMC gasket between front panel and side panel (depth-offset installation)

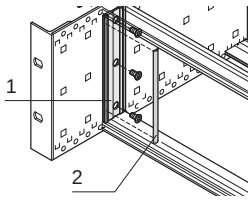

06102058

Item 1: 2 x support profiles, Al extrusion;
item 2: 1 x EMC textile gasket;
fixing material kit for vertical EMC shielding between depth-offset shielded front panels and side panel

Height U	Depth mm	Stainless steel EMC gasket between front panel and side panel (depth-offset installation) PU 1 kit	Textile EMC gasket between front panel and side panel (depth-offset installation) PU 1 kit
3	97.5	24562-199	24560-180
4	142.5	24562-299	24560-280
6	187.5	24562-499	24560-480
Assembly tool, for stainless steel EMC gasket 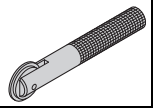		24560-270	–

EMC gaskets between backplane and side panel

Order Information

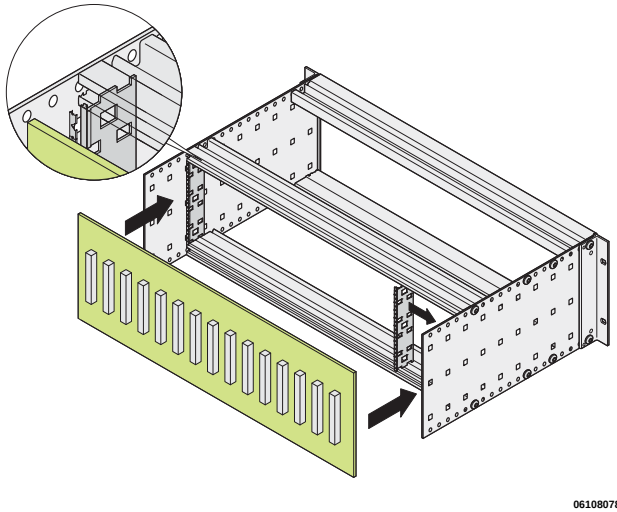

Stainless steel EMC gasket
between backplane and side panel (depth-offset installation)

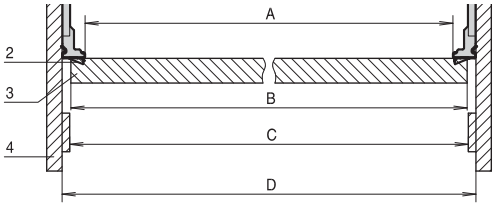

2 x support profile, Al extrusion,
2 x EMC gasket (stainless steel)
Fixing materials kit and user manual;
for vertical EMC shielding between shielded backplane and side panel;

dimensions (84 HP):
A = 425.8 mm,
B < 429.9 mm,
C = 429.8 mm,
D = 431.8 mm

Height U	PU 1 kit
3	24561-199
6	24561-499

- With an appropriate design the backplane can be used as shielding rear panel; for that purpose a rear horizontal rail (type L-VT or H-VT) for depth-offset installation must be used to ensure the horizontal contact
- For vertical contact the support profile can be fixed to the europacPRO side panel (depth grid 30 mm)

Special interior mounting parts

- Combined mounting: 3 U + 3 U and 6 U, see page 6.57
- Horizontal board mounting, see page 6.58
- Mounting plates, see page 6.59
- Central locking for PCBs, see page 6.60
- Divider plates, see page 6.60
- Air baffles, see page 6.61
- Telescopic slides, see page 6.62
- Fixing parts (bolts, nuts, assembly tools), see page 6.63

Combined mounting (6 U and 2 x 3 U one above the other)

Order Information

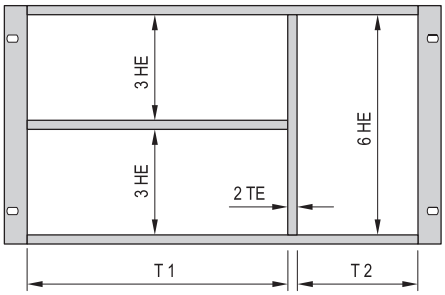 bza42182	**Combined mounting:** **horizontal and vertical subdivision (incl. front panel for stainless steel EMC gasket)**	**Alternative front panels for combined mounting**		**Splitting extrusion**
		unshielded front panel, 6 U, 2 HP item 6	**front panel for textile EMC gasket, 6 U, 2 HP item 6**	**for combined mounting item 2**
	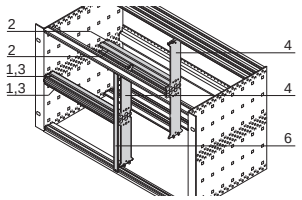 bpa46549	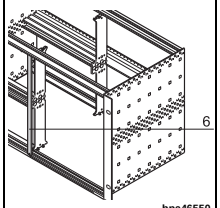 bpa46550	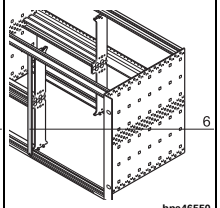 bpa46550	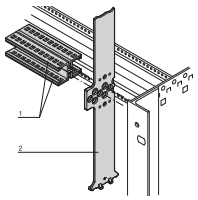 bpa45857
	Item 1: 2 front horizontal rails (H-KD), Al extrusion, anodised; item 2: 2 rear horizontal rails (AB), Al extrusion, anodised; item 3: threaded inserts, St, zinc-plated; item 4: Zn die-cast support members; item 6: front panel 2 HP, 6 U, with EMC stainless steel gasket; 84:0 without items 4, 5 Note see below 2)	Al, 2.5 mm, front anodised, rear iridescent green chromated	Al, 2.5 mm, U-profile with notch, 6 U, 2 HP	6 U, die-cast zinc; splitting extrusion is inserted in the grid holes of the horizontal rail; the splitting extrusion can be bolted
Width pitch T1:T2 **HP**	**PU 1 kit**	**1 (SPQ 5)**	**1 piece (SPQ 5)[1)]**	**1 piece**
20:62	24562-420	30847-472	30849-140	64560-010
40:42	24562-440			
42:40	24562-442			
63:19	24562-463			
84:0	24562-484			
Torx countersunk screw M4 × 14, zinc-plated, PU 100 pieces to fixsplitting extrusion/horizontal rail	–	–	–	24560-145
Panhead screw M2.5 × 10, St, zinc-plated, PU 100 pieces to fix horizontal rail/splitting extrusion	–	–	–	24560-179
Pozidrive/slotted collar screw M2.5 x 12.3, St, nickel-plated, PU 100 pieces	–	21101-101	21101-101	–
Pozidrive/slotted collar screw M2.5, black, zinc-plated, PU 100 pieces	–	21101-102	21101-102	–
Washer 2.7 x 5 x 1, PA 6, PU 100 pieces	–	21101-121	21101-121	–
Textile gasket, core: foam, sleeve: textile cladding with CuNi coating, UL 94 V-0 PU 10 pieces	–	–	21101-855	–

2) The following guide rails cannot be used: type "accessory", type "accessory, strengthened" and type "for 4.4" PCB"

- Subdivision of the 6 U assembly area into:
  - 2 x 3 U
  - 1 x 6 U
- Designed to accomodate euroboards (100 mm high) and ouble euroboards (233.35 mm high)

Note

- Please order EMC gasketing kit for horizontal rails separately, see page 6.54
- Please order perforated strips for horizontal rails separately, see page 6.33
- Please order rear centre horizontal rail separately, see page 6.31

Horizontal board mounting in 3 or 4 U subrack

Order Information

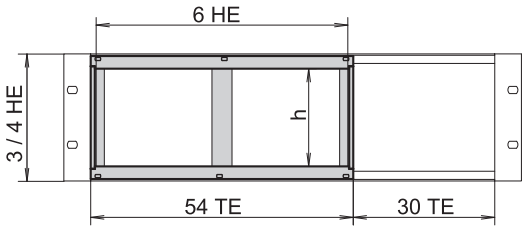

(1 TE = 1 HP, 1 HE = 1 U)

bpa45914

Height U	Usable height h HP	Mounting variants: Horizontal rail, front	Mounting variants: Horizontal rail, rear	Horizontal board mounting in 3 or 4 U subrack: Board cage	Front frame for EMC shielding	Front frame, unshielded
				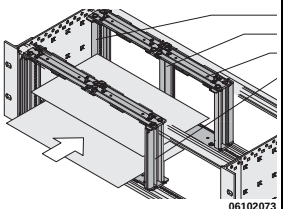 06102073 Struts, die-cast zinc; horizontal rails front and rear; threaded inserts, St, zinc-plated; fixing material kit; for horizontal mounting of double-height euroboards in 3 or 4 U high subracks/cases; 54 HP space required; **please order front frame for EMC shielding separately**	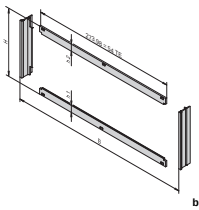 bpa45913 2 horizontal covers, Al 2.5 mm, front anodised, rear iridescent green chromated; 2 vertical trims, Al extrusion, passivated; stainless steel EMC gasket; front frame provides the contact between subrack and the sub-assemblies	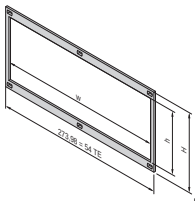 bza43061 Al, 2.5 mm, clear anodised; front frame with cut-out, clear internal width w = 266.35 mm
				PU 1 kit	**PU 1 kit**	**1 piece**
3	20			24564-117	24564-109	34564-108
3	20			24564-118	24564-109	34564-109
4	28			24564-217	24564-209	34564-208
Assembly tool, for stainless steel EMC gasket		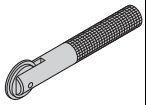		–	24560-270	–

* For direct backplane mounting

Note

■ Please order front frame for EMC shielding separately

Part number in bold face type: ready for despatch within 2 working days
Part number in normal type: ready for despatch within 10 working days

Mounting plates

Order Information

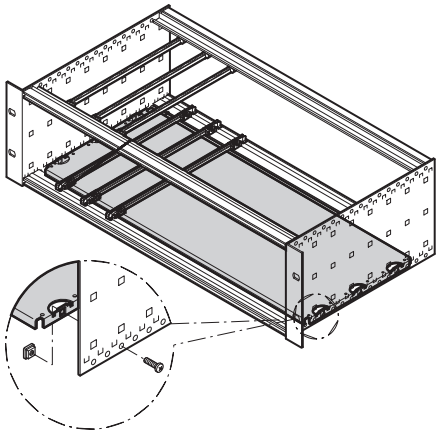 06102501			Mounting plate can be used in combination with cover plate	Mounting plate for use without cover plate	Mounting plate Fixing strip for partial widths
			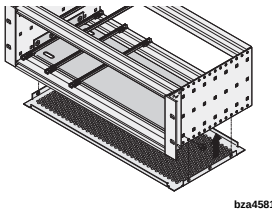 bza45819	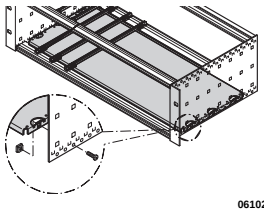 06102501	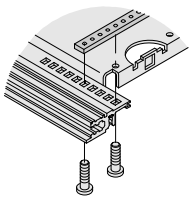 06102501
			Al, 1.5 mm; mounting is only possible over the entire width between the side panels; width of mounting plate = W - 9.71 mm	Al, 1.5 mm; for mounting over partial width, please order fixing strips separately	St, 2 mm, zinc-plated; is bolted from front to rear onto the horizontal rails; to fix mounting plates
Width W HP	**W mm**	**Board length mm**	**1 piece**	**1 piece**	**1 piece**
28	146.88	160	34563-001	34562-745	30840-021
28	146.88	220	34563-009	34562-749	30840-033
28	146.88	280	–	34562-753	30840-045
28	146.88	340	–	34562-757	30840-057
42	217.99	160	34563-002	34562-746	30840-021
42	217.99	220	34563-014	34562-750	30840-033
42	217.99	280	–	34562-754	30840-045
42	217.99	340	–	34562-758	30840-057
63	324.67	160	34563-003	34562-747	30840-021
63	324.67	220	34563-019	34562-751	30840-033
63	324.67	280	–	34562-755	30840-045
63	324.67	340	–	34562-759	30840-057
84	431.35	160	34563-004	34562-748	30840-021
84	431.35	220	34563-024	34562-752	30840-033
84	431.35	280	–	34562-756	30840-045
84	431.35	340	–	34562-760	30840-057
Assembly kit for mounting plate, PU 1 kit (Torx countersunk screw M4 x 5, St, zinc-plated, 12 pieces; screw M4 x 6, St, zinc-plated, 10 pieces; square nut M4, St, zinc-plated, 10 pieces)			24560-184	24560-184	–
Assembly kit for fixing strips for partial width mounting plates Torx screw M2.5 × 5, St, zinc-plated, PU 100 pieces			–	–	24560-146

Note

- For installation and fixing of heavy components
- In addition to the mounting plate, (EMC) cover plates can also be fitted to the subrack
- The mounting plate is as wide as the subrack or system case and is fixed to the side panels
- A guide rail can be fitted on the first and last slot
- Guide rails type "4.4" and type "strengthened" cannot be used

Central locking

Order Information

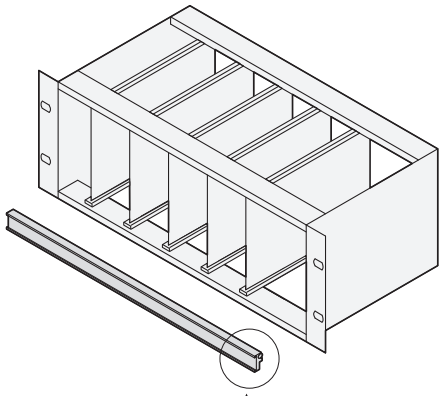

06197010

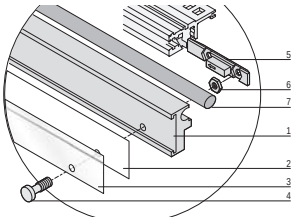

bza45819

Item 1: central rail, Al, anodised;
item 2: ID cardboard, white;
item 3: transparent cover strip, plastic;
item 4: 2 x knurled screw;
item 5: 2 x slide nut;
item 6: 2 x hexagon nut M2.5;
item 7: rubber gasket;
central locking allows joint locking of PCBs and serves as identification strip;
can be fitted to front and rear horizontal rails,
suitable for 84 HP width

Width	Length	Central locking for PCBs without front panels
HP	mm	1 piece
84	426.0	24560-167

Divider plate

Order Information

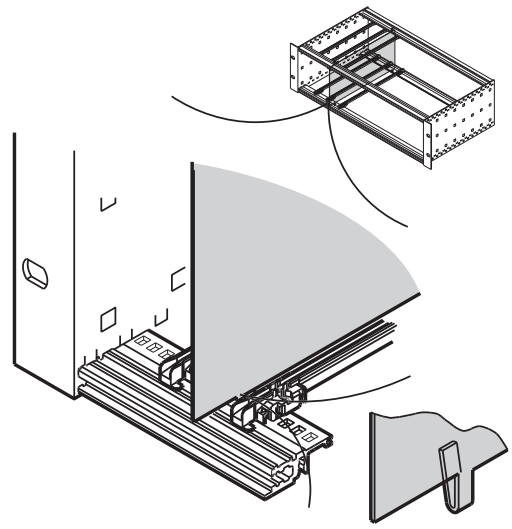

bpa45912

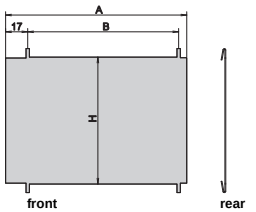

bpa45911

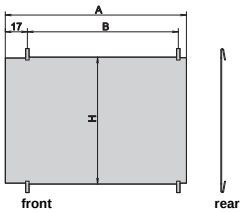

06105078

Stainless steel, 1 mm, is mounted by clipping onto horizontal rail,
space requirement on component side 2 mm;
mounting direction varies with shielding design (EMC stainless steel or textile gasket);
retrofitting the divider plate in an already-assembled subrack/case
will first require dismantling of the horizontal rails;
where front panels are unshielded, both mounting directions are possible

Height	Depth	A	B	H	Divider plate: Mounting position when stainless steel EMC gasket is used / Mounting position when textile EMC gasket is used
U	mm	mm	mm	mm	PU 10 pieces
3	160	158.3	135.0	113.5	34562-761
3	220	218.3	195.0	113.5	34562-762
6	160	158.3	135.0	246.9	34562-763
6	220	218.3	195.0	246.9	34562-764

Part number in bold face type: ready for despatch within 2 working days
Part number in normal type: ready for despatch within 10 working days

Air baffles for slots

Order Information

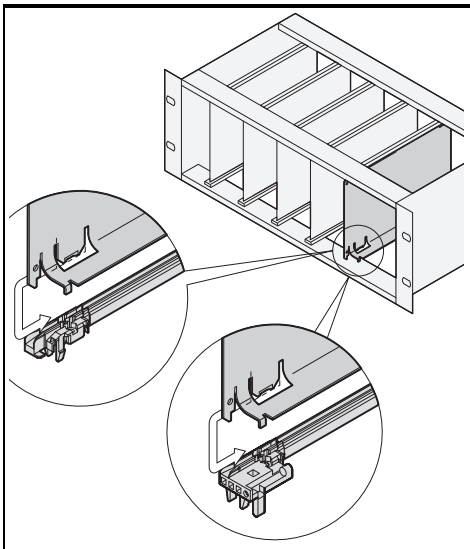

Depth mm	Width HP	Height U	Air baffle without front panel	Air baffle with front panel: Front panel with lateral groove for stainless steel EMC gasket	Air baffle with front panel: U front panel for textile EMC gasket
			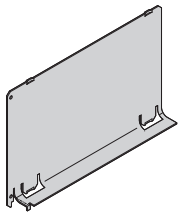 06108085	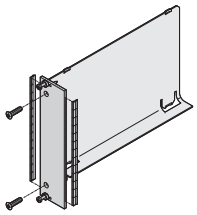 06108087	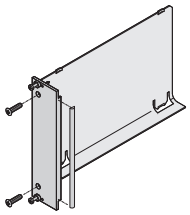 06108088
			Al, 1 mm, incl. fixing material kit; prevents an air short circuit in unused slot positions; is pushed into the groove of the guide rail	Air baffle, Al, 1 mm; front panel, Al, 2.5 mm, front anodised, rear conductive; stainless steel EMC gasket; fixing material kit prevents an air short circuit in unused slot positions; is pushed into the groove of the guide rail	Air baffle, Al, 1 mm, front panel, Al extrusion, 2.5 mm, front anodised, rear conductive; textile EMC gasket, fixing material kit prevents an air short circuit in unused slot positions; is pushed into the groove ofthe guide rail
			1 piece	**1 piece**	**1 piece**
160	4	3	34562-823	20848-712	20848-728
160	4	6	34562-826	20848-720	20848-736
160	8	3	34562-833	20848-714	20848-730
160	8	6	34562-836	20848-722	20848-738
160	12	3	34562-843	20848-716	20848-732
160	12	6	34562-846	20848-724	20848-740
220	4	3	34562-824	20848-713	20848-729
220	4	6	34562-827	20848-721	20848-736
220	8	3	34562-834	20848-715	20848-731
220	8	6	34562-837	20848-723	20848-739
220	12	3	34562-844	20848-717	20848-733
220	12	6	34562-847	20848-725	20848-741
Assembly tool for stainless steel EMC gasket, 1 piece 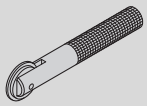			–	24560-270	–

Note

- Air baffle for 280 mm deep and for 80 mm rear I/O boards available on request

Simple telescopic slide for assembly of subracks in cabinets



06101006

- For mounting 84 HP wide subracks in the 19" plane
- Loading capacity: 25 kg per pair
- The guiding profile is matched to the fixing dimension in the cabinet (it is bolted to the 19" profile of the cabinet); the adaptor rail is matched to the depth and fixing dimension on the subrack (it is inserted into the guiding profile like a telescopic slide)
- Safety note:
  No protection against extraction, no stop at full extension

Order Information

Telescopic slides with guiding profile for fitting in cabinets

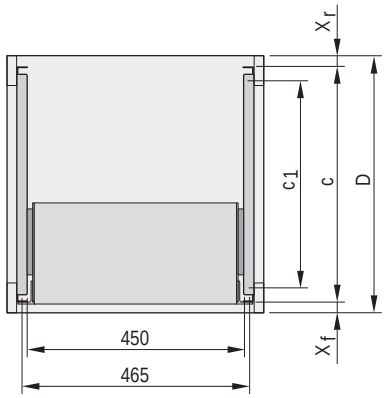

bza45819

Description	Depth D	x_f	x_r	C	c1	Part no.
	mm	mm	mm	mm	mm	
VARISTAR	600	50	50	500	369	24562-464
VARISTAR	800	50	50	700	569	24562-466
VARISTAR	900	50	50	800	669	24562-467
VARISTAR	1000	50	50	900	769	24562-468
VARISTAR	1100	50	50	1000	869	24562-472
VARISTAR	1200	50	50	1100	969	24562-473
eurorack	600	60	60	480	397	24562-449
eurorack	800	60	60	680	597	24562-451
eurorack	900	60	60	780	697	24562-452
NOVASTAR	500	33	60	407	350	24562-460
NOVASTAR	600	33	60	507	450	24562-461
NOVASTAR	800	33	60	707	650	24562-474
Lab rack	250	0	0	250	162	24562-446

x_f, x_r: Distance of 19" plane to cabinet edge (front, rear)
c: Distance of 19" planes from each other,
c1: Fixing dimension of guiding profile on 19" panel/slide mounts

Order Information

Telescopic slides with adaptor rail for subracks

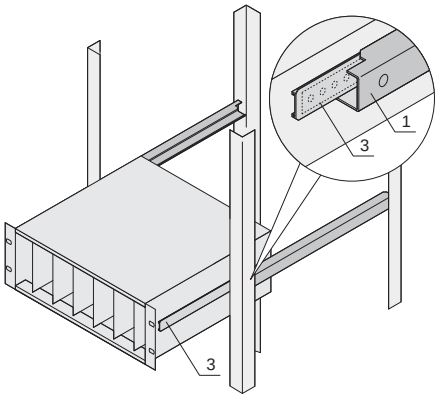

bza45819

For subrack depth	Part no.
mm	
175	24562-453
235	24562-454
295	24562-455
355	24562-456
415	24562-457
475	24562-458

Part number in bold face type: ready for despatch within 2 working days
Part number in normal type: ready for despatch within 10 working days

Assembly parts

- Quick-release fasteners
- Sleeves
- Screws
- Cage nuts
- Tools

Quick-release fasteners

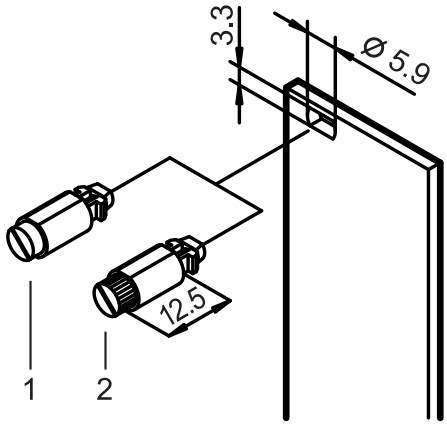

06702062

- Vibration and shock proof
- 1/4 rotary lock with defined stop
- Detection of locking position through slot position

Delivery comprises

Qty	Description
1	Locking pin, St, locking, Zn die-cast
1	Press-in sleeve, POM

Order Information

Item	Description	Qty/PU	Part no.
1	With slotted head, grey	100	21101-847
1	With slotted head, black	100	21101-848
2	With knurled and slotted head, grey	100	21101-849
2	With knurled and slotted head, black	100	21101-850

Note

Quick-release fasteners: mounting without threaded inserts

Sleeves

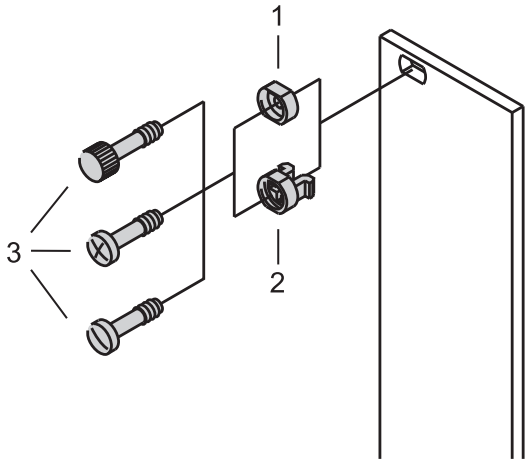

06702061

Order Information

Item	Description	Qty/PU	Part no.
2	Plastic sleeve, PA, grey	100	21100-464
2	Plastic sleeve, PA, black	100	21100-591
1	Metal sleeve, brass, nickel-plated	10	21100-659
1	Metal sleeve, brass, nickel-plated	100	21100-660
1	Metal sleeve, brass, black	100	21100-886
1	Metal sleeve, stainless steel	10	21100-661
1	Metal sleeve, stainless steel	100	21100-662

Note

- Metal sleeves must be pressed-in in front panels
- Sleeve does not fit in 2 HP wide front panels

Collar screws

Order Information

	Description	Application	Material	Dimension	Qty/PU	Part no.
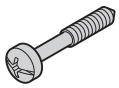 AZA46586	Collar screw with pozidrive/slot	For mounting of front panels when using threaded inserts	St, nickel-plated	M2.5 x 12.3	100	21101-101
			St, zinc-plated, black	M2.5 x 12.3	100	21101-102
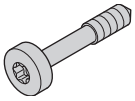 AZA45941	Torx collar screw	For mounting of front panels when using threaded inserts	St, nickel-plated	M2.5 x 12.3	100	21101-782
			St, zinc-plated, black	M2.5 x 12.3	100	21101-783
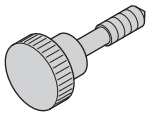 aza45929	Collar screw with knurled head	For mounting of front panels when using threaded inserts	Brass, nickel-plated	M2.5 x 12.3	100	21101-749
		For mounting of front panels when using threaded inserts for horizontal rails with long lip	Brass, nickel-plated	M2.5 x 12.3	100	21101-909

Torx screws, self-forming

Order Information

	Description	Application	Material	Dimension	Qty/PU	Part no.
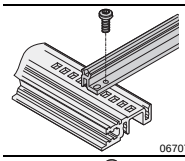 06707058	Torx panhead screw, self-forming	For extra-robust Al guide rails; torque max. 0.2 Nm	St, zinc flake coating, black	2.5 x 7.3	100	24560-157
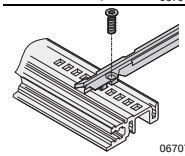 06707058	Torx countersunk screw, self-forming	For 4.4" board height, guide rail on horizontal rail, europacPRO, ratiopacPRO; torque max. 0.2 Nm	St, zinc-plated	2.5 x 7.7	100	24560-158
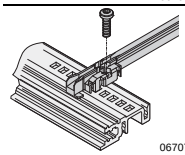 06707058	Torx panhead screw, self-forming	For plastic guide rail on horizontal rail; for panel bracket on horizontal rail; torque max. 0.2 Nm	St, zinc-plated	2.5 x 9.3	100	24560-141
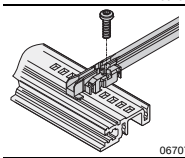 06707058	Torx panhead screw, self-locking	For plastic guide rails on horizontal rails	St, zinc-plated	2.5 × 9.3	100	21500-039
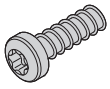 06707058	Torx panhead screw	For 6 U support member, backplane mounting, centre horizontal rail	St, zinc-plated	2.5 × 10	100	24560-179

Part number in bold face type: ready for despatch within 2 working days
Part number in normal type: ready for despatch within 10 working days

Countersunk screws

Order Information

	Description	Application	Material	Dimension	Qty/PU	Part no.
 AZA46585	Torx screw	For support profiles europacPRO, ratiopacPRO	St, zinc-plated	M4 x 5	100	24560-139
		For mixed board assembly and assembly of shortened horizontal rail on support member, with GND/earthing function	St, zinc-plated	M4 x 14	100	24560-145

Torx panhead screws

Order Information

	Description	Application	Material	Dimension	Qty/PU	Part no.
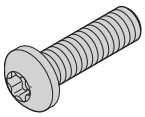 aza45940	Torx panhead screw	For Z-rails and connector assembly	St, nickel-plated	M2.5 x 7	100	24560-147
		For perforated rails	St, nickel-plated	M2.5 x 10	100	24560-148
		For backplane mounting	St, nickel-plated	M2.5 x 12	100	24560-161
			St, nickel-plated	M2.5 x 14	100	24560-162
 aza45178	Washer	For insulated backplane mounting	Plastic, PA	2.8 x 6.3 x 2	100	21101-964
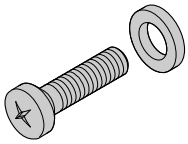 aza45940	Screw + plastic washer (PA)	For backplane mounting	St, nickel-plated	M2.5 x 12	100	21100-777
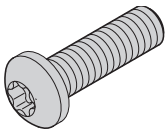 aza45940	Torx panhead screw	To bolt on support bracket, rear hood, corner profile on side panel, lengthening bracket and connecting bracket	St, zinc-plated	M4 x 6	100	24560-135
		To bolt-on cover plate or mounting plate, with GND/earthing function	St, zinc-plated	M4 x 6	100	24560-151
		To bolt-on cover plate or mounting plate, with GND/earthing function, self-forming thread	St, zinc-plated	M4 × 6	100	21101-884
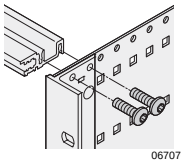 06707058	Torx panhead screw	For horizontal rail on side panel if guide rails are bolted to slot 1	St, zinc-plated	M4 x 10	100	24560-155
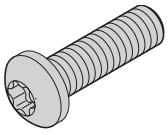 aza45940		For horizontal rail on side panel, with GND/earthing function	St, zinc-plated	M4 × 14	10	24560-131
		For horizontal rail on side panel, with GND/earthing function	St, zinc-plated	M4 x 14	100	24560-130

Grub screws

Order Information

	Description	Application	Material	Dimension	Qty/PU	Part no.
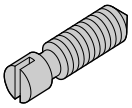 06702053	Grub screw	For threaded inserts M2.5 and perforated strips	Stainless steel	M2.5 x 9	100	21101-359
		For threaded inserts M2.5	St, nickel-plated	M2.5 x 8	100	21100-276
		For threaded inserts M3	St, zinc-plated	M3.0 x 8	100	21100-646

Square nuts

Order Information

	Description	Application	Material	Dimension	Qty/PU	Part no.
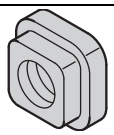 AZA45921	Square nut	For fixing: parts to side panels, support profiles, mounting plates	St, zinc-plated	M4	100	24560-140

Assembly kits

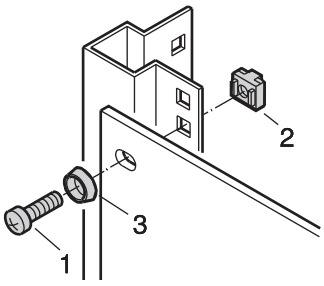

SC128XXX

- For assembly of subracks in cabinets or 19" cases
- For assembly of desk-top cases in cabinets by means of 19" brackets

Delivery comprises (kit)

Item	Qty	Description
1	1	Pozidrive screw M6 × 16, zinc-plated
2	1	Plastic washer, ABS, black
3	1	Cage nut M6, zinc-plated

Order Information

Description	Part no.
PU = 8 × screw, washer, nut	21100-435
PU = 50 each of M6 screw, washer and cage nut	21101-809
PU = 100 each of M6 screw, washer and cage nut	21101-810

- For 19" brackets with material thickness of 1.5 mm, see "Assembly kits" in chapter Cabinet accessories

Slide, to accomodate 2 nuts

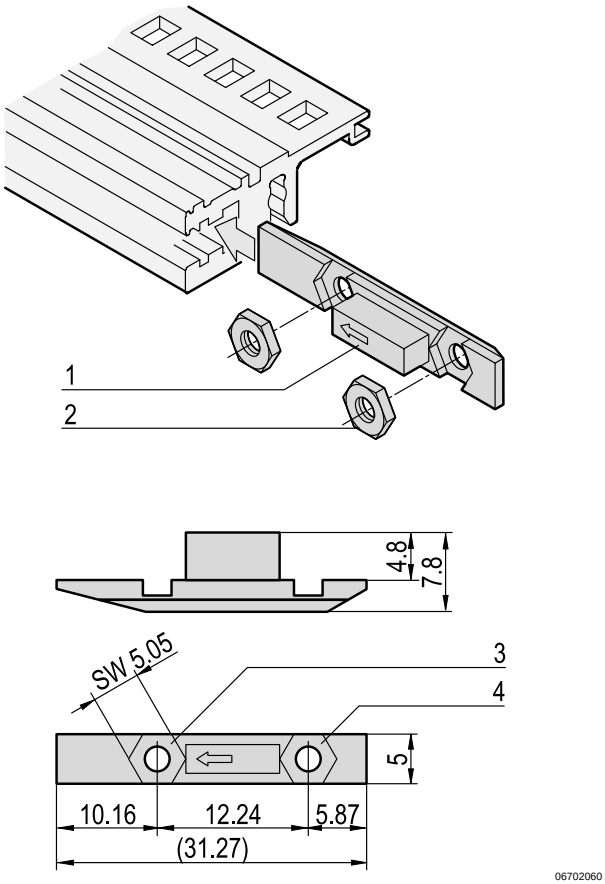

- The slide is pushed into the groove of the horizontal rail to front or rear (type VT)

Delivery comprises (kit)

Item	Qty	Description
1	1	Slide, PBT, red, UL 94 V-0
2	2	Nut, M2.5, St, zinc-plated

Order Information

Description		Part no.
Slide nut kit 1	100 slides/200 nuts	24560-165
Slide nut kit 2	12 slides/24 nuts	24560-166

Note

- Nuts used in item 3 suitable for:
  - hinged front panels, 84 HP
  - front or rear panels, 84 HP
- Nuts used in item 4 suitable for:
  - hinged front panels
- Nuts used in item 3 and 4 suitable for:
  - two front panels

For further information www.schroff.biz/oneclick
oneClick search code = Part no.

Assembly tools

Order Information

	Description	Application	Dimension	Qty/PU	Part no.
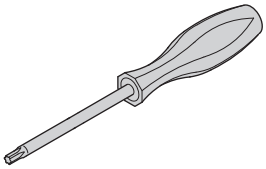 AZA45925	Torx screwdriver	T 8 torx	T8	1	64560-026
		T 20 torx	T20	1	64560-027
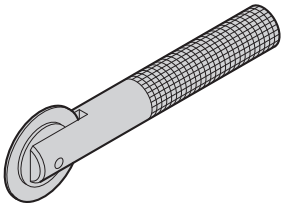 aza45938	Assembly tool	Exclusively to fix stainless steel EMC gaskets in horizontal rails	–	1	24560-271
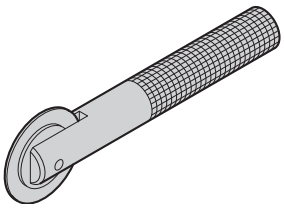 aza45937	Assembly tool	To fix stainless steel EMC gaskets on front panels with lateral slots	–	1	24560-270

Note

- Assembly tool to insert keying/coding pegs in guide rails is available on request

Tape measure

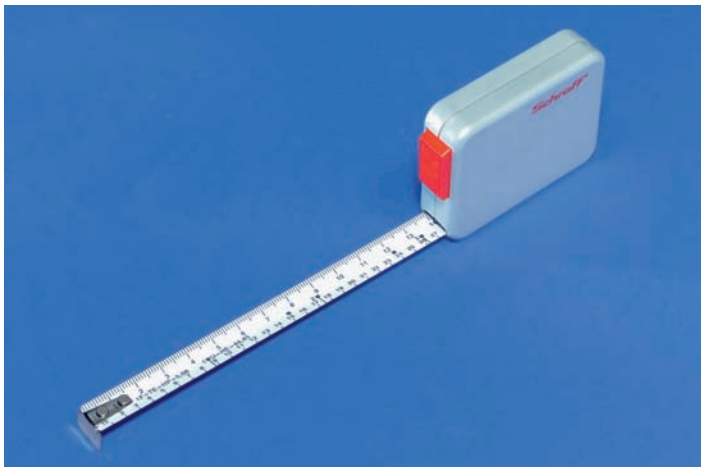

32506001

- Measuring tape with cm, U-, HP-division (length 2 m)
- Plastic housing, metal measuring tape with automatic collection

Order Information

Description	Qty/PU piece	Part no.
Tape measure	1	89009-001

For further information www.schroff.biz/oneclick
oneClick search code = Part no.

Part number in bold face type: ready for despatch within 2 working days
Part number in normal type: ready for despatch within 10 working days

Application examples

Application: Transportation/defense sectors



06108006

- Mounting frame to accomodate a 36 HP wide railway subrack, frame from stainless steel



06103001

- Robust assembly by double bolt-on fixing
- Lateral ducting in cabinet
- Combined mounting 6 U+ 2 x 3 U

Application: Measurement, control and instrumentation sectors

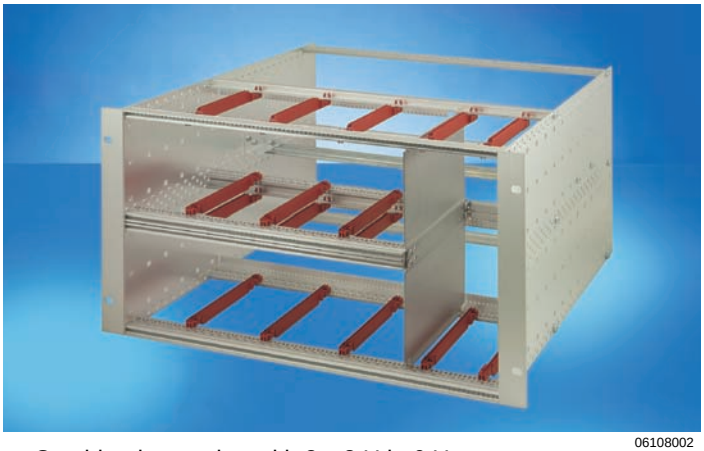

06108002

- Combined mounting with 2 x 3 U in 6 U
- Divider plate to separate different sections
- Installation with strengthened guide rails



06108003

- Subrack with additional telescopic fan unit
- Adaptation at bottom and top integrated into the side panel

Application: Telecoms sectors



06112023

- Shielded subrack for special applications with mounting plate, cover and base plate
- Mounting plate for heavy assemblies



06101005

- Subrack with plastic cable ducting for fibre optic cables
- Terminal area at top



SCHROFF GMBH, LANGENALBER STRASSE 96–100, D-75334 STRAUBENHARDT WWW.PENTAIREQUIPMENTPROTECTION.COM

39601-641 © 2012 Pentair Equipment Protection