

CT Current transformers
Ideal for measuring.
Designed to create efficiency.

Power and productivity
for a better world™

CT Current transformers
Optimize consumptions. Improve the efficiency.



Energy efficiency, minimized costs and high system availability represent now three central aspects of plant management. To achieve them it is necessary to know when, where and how the energy is consumed. This is why measuring and monitoring the principal electrical parameters of the network is becoming increasingly more and more important.

To measure is to know

In an energy market dominated by the need to improve the performance and reduce the consumption of an electrical system, it becomes vitally important to obtain a detailed profile of how this system operates. This helps in identify areas where consumption can be optimized, efficiency increased and harmful emissions reduced.
Measuring and monitoring the principal network parameters can substantially contribute in that, by highlighting the level of energy consumption and the quality of the power used, by monitoring and preventing faults and planning maintenance activities. All this leads to an improved safety level, not only for the installations, but also for the components and systems connected.

ABB Measurement devices range of System pro *M* compact® includes a comprehensive and specialist offers of DIN rail and front panel devices designed for every type of civil, commercial and industrial applications.

The ideal solution for indirect measurements

ABB complete and comprehensive range of CT current transformers is the perfect solution for indirect measurement of the electrical parameters that characterize a system, when the network current is above the rated current measurement range of the instrument.

Introduction of the CT PRO XT and CT MAX series renews the range of current transformers for secondary and primary sub-distribution switchboards and for Power Centers, by adding advanced products that have been specially designed for easy installation and maximum performance. Moreover, high level of safety is guaranteed thanks to the innovative electronic circuit, built-in into the CT… SELV versions.

CT PRO XT, CT MAX
Performance and flexibility.

The new CT PRO XT and CT MAX range of current transformers has been specially designed for easy and safe switchboard installation, testing and maintenance operations thanks to the compact size of the products and their flexible assembly system. Moreover, the integrated electronic protection circuit in the CT PRO XT SELV and CT MAX SELV versions guarantees protection against risks deriving from no-load operation of the secondary.

Double method for connecting the secondary winding, thanks to introduction of screwless terminals, an application standard more and more widespread, that facilitates and speeds up the installation and maintenance operations.

Sealing points for the cover to protect the terminal board of the secondary circuit and to ensure product compliance in applications for fiscal and billing purposes.

Screw terminals for secondary winding usable with forked cable terminals and stripped cables. The assembly instructions are directly indicated on the product.

Marks and approvals attesting the conformity to the principal international standards.

The extremely compact dimensions make the product extremely flexible when it comes to installation, and easy to handle during maintenance and tests.

Through primary dimensions designed to optimize the product installation (considering rated current values and primary conductor dimensions) and to suit any standard applications requirements.

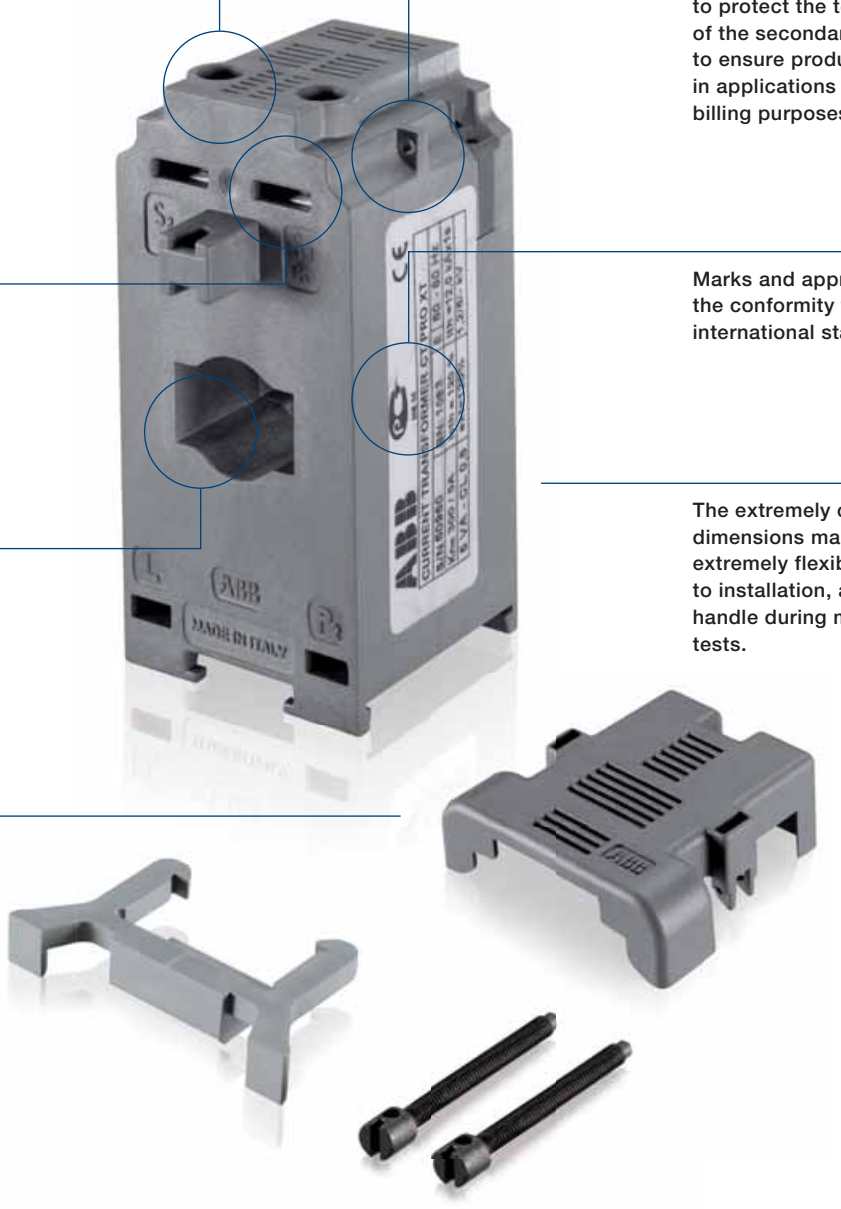

The accessories provided along with the product include a sealable cover for billing applications, and assembly supports allowing the product to be installed in all the more common mounting systems (primary cable, primary busbar, DIN rail and wall-mounting installations).

CT PRO XT SELV, CT MAX SELV
Integrated safety. Automatic protection.

The innovative electronic circuit for automatic protection against hazards deriving from unintentional interruption of the secondary circuit, maximizes the safety level preventing risks caused by overvoltage and overheating inside the switchboard.

The ideal operating conditions for current transformers are when the circuit connected to the transformer secondary terminals is permanently closed.
Accidental opening could generate critical conditions such as overvoltage proportional to the transformer's transformation ratio, magnetization of its core or overheating inside the switchboard.
Besides impairing measurement accuracy, all these situations create hazardous conditions for the persons and devices in direct contact with the switchboard.
The new electronic protection circuit available in the SELV versions of CT PRO XT and CT MAX automatically short-circuits the transformer secondary terminals in case of opening of the connected circuit, thereby preventing the mentioned risks.

By instantly tripping, the circuit protects the persons and devices in direct or indirect contact with the current transformer while maintaining residual voltage on its secondary terminals always less than 25V RMS, the safety threshold required for any type of application.
The circuit influence on the transformer stops as soon as the operating conditions come back to normal.
Free from moving mechanical parts and made with semiconductor components, the circuit is both reliable and long-lasting. It also reduces the overall cost of the installation since there will be no need for short-circuitable terminal boards.



CT PRO XT, CT MAX
Installation sequences.

The accessories supplied with the new CT PRO XT and CT MAX current transformers offer maximum flexibility when it comes to installation and integration in in every type of applications. They make the most out of the available space and guarantee maximum integration within the switchboard.

Fixing systems

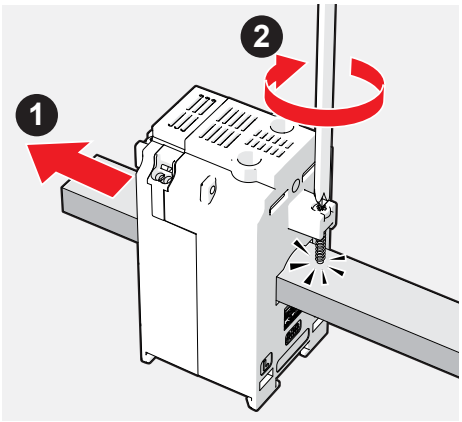

Installation on cable or primary busbar

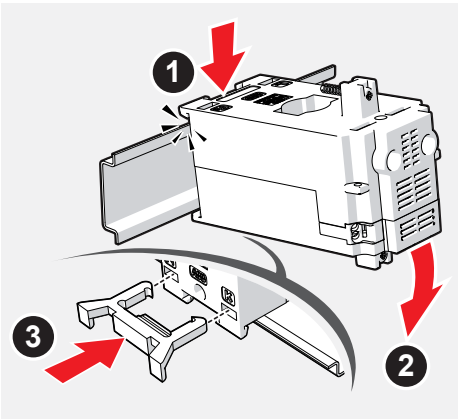

DIN rail installation

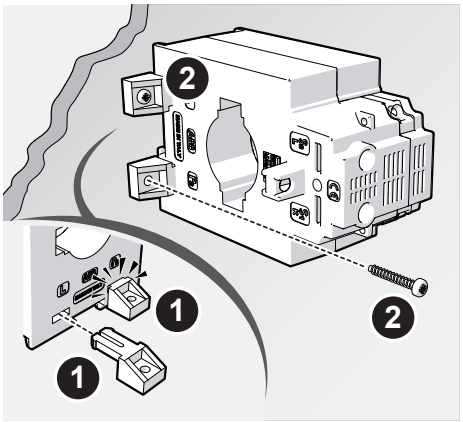

Wall-mounting installation

Wiring method

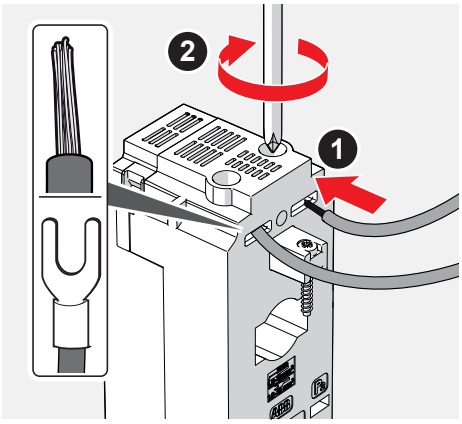

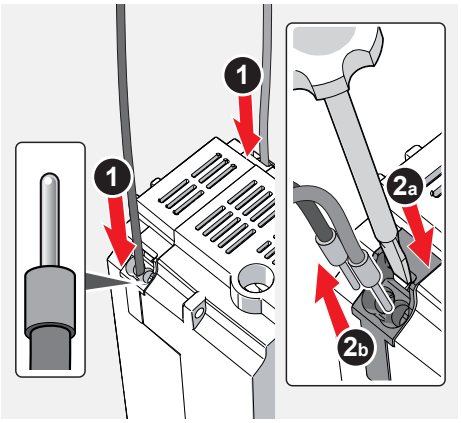

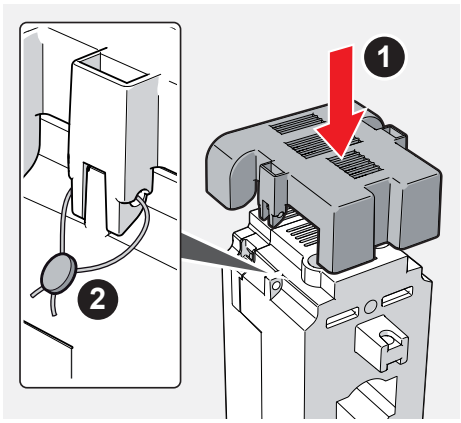

If the screw secondary terminals of the current transformer are used, the connections must be made using cables with forked cable terminals or stripped cables, in accordance with the instructions directly indicated on the product.

Wiring with screwless terminals requires cables with pin terminals, without the need of any mounting tools.
Once the transformer has been installed, the sealable cover can be fixed with sealing wire.

Assembly TIPS

1) Make sure that the incoming (P1-K) and outgoing (P2-L) directions of the primary cable are correct when installing the transformer.
2) Take care to prevent the primary and secondary connections from being inverted in current transformers where both primary and secondary are on the terminals.
3) Short-circuit the secondary transformer terminals if the measuring instruments detach from the transformer (in standard versions without automatic electronic secondary protection circuit) when the installation is connected.
4) It is suggested to earth the transformers.

The main metering applications
Ideal for measuring. Designed to create efficiency.

ABB range of current transformers are designed to be part of metering systems, where they are used to allow indirect measuring of electrical parameters of the network. An efficient metering and monitoring system can be successfully used whenever power consumption must be evaluated and optimised, and when the quality of the energy supplied, as well as continuity of the service, must be analyzed.

Key applications:

- Measurement and analysis of the electrical parameters in sub-distribution switchboard and in Power Centers.
- Applications in which prearranged maintenance must be programmed.
- Power quality analysis:
  - Applications where the load profile must be controlled and the peaks monitored
  - Analysis of the level of harmonics, monitoring the THD, power factor and cosphi
  - Detection of over-currents, voltage swells and dips, power peaks
- Sub-metering and cost allocation:
  - In residential applications: garages, cellars, apartments, ventilation and conditioning systems.
  - In commercial sector: shopping malls, offices, exhibition centers, ports, hotels, camp-sites.
  - In industrial applications: object metering of individual machines, production lines, offices and power generation systems.
- High-efficiency systems and integration in building automation systems
- Installations where consumption must be verified in real time through remote monitoring systems
- Applications where states and events/alarms must be monitored through remote control PC/PLC



M2M

With the new front-panel network analysers M2M, ABB offers the solution for measuring and analysing electrical parameters for low- and medium-voltage, single-phase or three-phase systems.

Install the free QRCode reader application on your mobile. Use the app to scan the QRCode or take a picture of it with your mobile camera to view the M2M brochure.



EQ METERS

Accurate, easy to install and use, perfectly adaptable with any type of system: the new EQ meters range is the ideal solution for monitoring and optimizing energy consumption in any installation.

Install the free QRCode reader application on your mobile. Use the app to scan the QRCode or take a picture of it with your mobile camera to view the EQ meters brochure.

Fiscal and billing applications
Guaranteed fiscal metering.

All ABB current transformers with at least 0.5 precision class can be used for fiscal applications since they are also equipped with a sealable terminals cover for their secondary terminals. The new EQ Meter series complete ABB offer of measurement devices for fiscal and billing applications since they are provided with terminals cover and programming buttons both sealable, and thanks to their compliance with the European MID directive («Measurement Instrument Directive», specific for energy meters, introduced by the European commission in 2004 to promote the free trade of measuring instruments and provide common rules for their use). For fiscal and billing applications, refer also to local standards and regulations.

Key applications:

- Conventional power generation plants
- Power generation plants using renewable sources (photovoltaic) and co-generation systems
- Heavy industries for steel-working, presswork and foundries that benefit from tax exemption with regard to power consumption
- UPS/electric generator sets, for which tax exemption is applicable with regard to use of diesel fuel for energy production
- Applications with interruptible loads
- Applications in which energy metering is used for fiscal transactions



CT PRO XT SELV, CT MAX SELV
The utmost level of safety.

High-level safety applications

The new electronic circuit for automatic protection of the secondary terminals - available in the SELV versions of CT PRO XT and CT MAX - is the ideal solution when the safety level of the installation needs to be maximised. It guarantees protection against hazardous circumstances that occur when the secondary terminals of current transformer accidentally open (risk of direct or indirect contact with persons or devices, risk of overheating and/or fire outbreaks), as well as in applications where operational continuity is of fundamental importance.

These versions can be used in all the standard current transformer applications for the purpose of enhancing the prevention of any type of risks and providing improved protection for the installation. The integrated electronic protection circuit guarantees safety without affecting the current transformer's operation in nominal conditions, since it is self-supplied by the secondary terminals, but only if the connected circuit is open.

Key applications:

- Application in location at high risk of fire and explosion (mines or cave)
- Application in moist locations
- Hospitals and medical facilities;
- Naval applications;
- Low or ultra-low voltage applications;
- Modular switchboard where a high safety level is required
- Electrical installations accessible to unqualified persons





CT Current transformers
Technical features

		CT...	CTO	TRFM
Standard secondary current	A	5 A		
Max. voltage for operation [1]	kV	1.2		
Test voltage [2]	kV	3 at 50 Hz/1min		
Residual current voltage at secondary terminals when security circuit intervenes (only SELV versions)		< 25 V rms		
Short circuit rated thermal current [3]	IpN	40 for 1 sec.	60 for 1 sec.	40 for 1 sec.
Short circuit rated dynamic current [4]	Ith	2.5 for 1 sec.		
Permanent overload	IpN	1.2		
Safety factor [5]	Sf	from ≤ 2 to ≤ 10 depending on the type and capacity		
Frequency	Hz	50-60		
Air insulation E class		Class E	Class B	Class E
Terminals [6]		primary = P1, P2 (K-L) secondary = s1, s2 (k-l) P1 (K) = primary winding input P2 (L) = primary winding output s1 (k) = secondary winding input s2 (l) = secondary winding output		
Housing		Self-extinguishing thermoplastic resin V0		
Protection degree		IP30	IP20	IP20
Operating temperature	°C	-5...+50	-5...+50	-25...+50
Max. temperature on bars	°C	70°C		
Storage temperature	°C	-20...+80	-20...+80	-40...+80
Relative humidity		80%		
Reference standard		IEC EN 60044-1, IEC EN 61010-1		
Secondary protection circuit reference standards (only SELV versions)		IEC 60364; IEC 473.1.4; IEC 556.3; CEI 64-8-4; CEI 411.1.4.3; CEI 411.5.2 - CEI 411.2 - CEI 473.1.4 - CEI 473.2.3		

[1] Max. voltage (effective value) that the transformer can withstand.
[2] Industrial frequency voltage that, for the purposes of insulation, the transformer can withstand for 1 min between the primary and secondary.
[3] Max. primary current (effective value) that the transformer can withstand for 1 sec. with the secondary short-circuited without overload-induced damages.
[4] Max. primary current (effective value) that the transformer can withstand for 1 sec. with the secondary short-circuited without damages caused by electromagnetic stress.
[5] Ratio between primary current causing nucleus saturation and the rated primary current value: the lower the Sf the higher the protection level on the transformer.
[6] Brass terminals CuZn37, M4x6 screws with torsion value 1.9 Nm, tensile value 440 N/mm^2 and elasticity limit 340 N/mm^2.



Selection guide
Make the right choice has never been easier

ABB wide range of current transformers provides the right solution for every application.
Choose the proper transformer for every installation begin from the knowledge of the most important parameter of the system. Going through the steps outlined in the table is the right way to make the perfect choice:

1 Find out which type breaker is installed in the switchboard. This will tell the type of primary busbars or cables used in the application.
2 Decide whether the secondary protection must be used, which will depend on the safety level required by the application.

Current transformer selection guide

	Breaker choice					
Modular	SN201, S200, S280, S700, S800, DS201, DS202C, DS941					
Tmax	XT1, XT2, XT3, XT4, T4320				T5	
Emax						
	Installation choice					
Fixing system	DIN rail	DIN rail	DIN rail, cable or busbar		Busbar	
	Rated current choice					
Rated current (A)	CTA	TRF M	CT PRO XT		CT30	CT MAX
			Standard	SELV version		Standard
5	CTA/5					
10	CTA/10					
15	CTA/15					
20	CTA/20					
25	CTA/25					
40	CTA/40 (cl. 0.5)	TRFM/40	CT PRO XT 40	CT PRO XT 40 SELV		
50	CTA/50 (cl. 0.5)		CT PRO XT 50	CT PRO XT 50 SELV		
60	CTA/60 (cl. 0.5)	TRFM/60 (cl. 1)	CT PRO XT 60	CT PRO XT 60 SELV		
80	CTA/80 (cl. 0.5)		CT PRO XT 80	CT PRO XT 80 SELV		
100	CTA/100 (cl. 0.5)	TRFM/100	CT PRO XT 100	CT PRO XT 100 SELV	CT30/100 (cl. 3)	
150		TRFM/150	CT PRO XT 150 (cl. 1)	CT PRO XT 150 SELV (cl. 1)	CT30/150 (cl. 3)	
200			CT PRO XT 200 (cl. 1)	CT PRO XT 200 SELV (cl. 1)		
250		TRFM/250	CT PRO XT 250	CT PRO XT 250 SELV	CT30/250	
300			CT PRO XT 300	CT PRO XT 300 SELV		CT MAX 300
400		TRFM/400	CT PRO XT 400	CT PRO XT 400 SELV	CT30/400	CT MAX 400
500						CT MAX 500
600		TRFM/600				CT MAX 600
800						CT MAX 800
1000						CT MAX 1000
1200						
1250						
1500						
2000						
2500						
3000						
4000						
5000						
6000						
	SELV version					
	CTA	TRF M	CT PRO XT		CT30	CT MAX
	Wound primary	Through primary	Through primary		Split core trough primary	Through primary
Through ○	8	29	18	18	\	30
Primary max ▭	\	\	20x10	20x10	\	30x15; 40x10
Section [mm] ▯	\	\	\	\	2x30x10	\

3 Identify the transformer type considering the rated current of the network.
4 Check the accuracy class of the transformer.
5 Check the size of the transformer primary section. If does not fit the application requirement repeat the previous passages selecting the following CT series.

		T6,T7		T6,T7				
		E1.2, E2.2, E4.2				E2.2, E4.2, E6.2	E2.2, E4.2	E1.2
DIN rail, cable or busbar, base mounted with feet					Busbar	DIN rail, cable or busbar, base mounted with feet		Busbar

	CT6	CT8	CT8V	CT80	CT12	CT12V	CT120	Class
SELV version								
								0.5
								0.5
								0.5
								0.5
								0.5
								3
								3
								3
								3
								1
								0.5
								0.5
	CT6/250			CT80/250				0.5
CT MAX 300 SELV	CT6/300	CT8/300						0.5
CT MAX 400 SELV	CT6/400	CT8/400	CT8-V/400	CT80/400			CT120/400	0.5
CT MAX 500 SELV	CT6/500	CT8/500	CT8-V/500	CT80/500	CT12/500		CT120/500	0.5
CT MAX 600 SELV	CT6/600	CT8/600	CT8-V/600	CT80/600	CT12/600		CT120/600	0.5
CT MAX 800 SELV	CT6/800	CT8/800	CT8-V/800	CT80/800	CT12/800	CT12-V/800	CT120/800	0.5
CT MAX 1000 SELV	CT6/1000	CT8/1000	CT8-V/1000	CT80/1000	CT12/1000	CT12-V/1000	CT120/1000	0.5
	CT6/1200	CT8/1200	CT8-V/1200		CT12/1200	CT12-V/1200	CT120/1200	0.5
						CT12-V/1250		0.5
	CT6/1500	CT8/1500	CT8-V/1500		CT12/1500	CT12-V/1500	CT120/1500	0.5
	CT6/2000	CT8/2000	CT8-V/2000		CT12/2000	CT12-V/2000		0.5
	CT6/2500	CT8/2500	CT8-V/2500		CT12/2500	CT12-V/2500		0.5
		CT8/3000			CT12/3000	CT12-V/3000		0.5
					CT12/4000	CT12-V/4000		0.5
					CT12/5000			0.5
					CT12/6000			0.5

	CT6	CT8	CT8V	CT80	CT12	CT12V	CT120
				Split core trough primary	Through primary		Split core trough primary
30	50	2x30	2x35	\	2x50	3x35	\
30x15; 40x10	60x20	80x30	\	\	80x50; 100x50; 125x50	\	\
\	\	\	80x30; 3x80x5	2x80x10	\	125x30, 3x100x10, 4x100x5, 4x125x5	4x120x10

CT PRO XT, CT PRO XT SELV
Order codes



CT PRO XT series

Through primary		max section [mm]
cable	◯	18
horizontal bar	▭	20x10
vertical bar	▯	–

CT PRO XT

The CT PRO XT current transformers range is designed for distribution systems using cables up to 18 mm in diameter, and primary busbars with dimensions up to 20 x 10 mm. Order codes are available with primary rated current up to 400 A. CT PRO XT transformers are the ideal solution for distribution and sub-distribution switchboards downstream ABB modular circuit-breakers (SN201, S 200, S 280, S 800, DS 201, DS 202C, DS 941) or downstream of Tmax circuit-breakers (XT1, XT2, XT3, XT4 and T4320).

CT PRO XT …/5 A series, through primary

Primary rated current Iprim A	Accurancy class	Rated power VA	Bbn 8012542 EAN	Order details Type code	Order code	Price 1 piece	Weight 1 piece kg	Pack unit pc.
40	3	2	257455	CT PRO XT 40	2CSG225745R1101		0.32	1
50	3	2	257554	CT PRO XT 50	2CSG225755R1101		0.32	1
60	3	2	257653	CT PRO XT 60	2CSG225765R1101		0.32	1
80	3	2	257752	CT PRO XT 80	2CSG225775R1101		0.32	1
100	1	3	257851	CT PRO XT 100	2CSG225785R1101		0.32	1
150	1	5	257950	CT PRO XT 150	2CSG225795R1101		0.32	1
200	1	5	258056	CT PRO XT 200	2CSG225805R1101		0.32	1
250	0.5	5	258155	CT PRO XT 250	2CSG225815R1101		0.32	1
300	0.5	5	258155	CT PRO XT 300	2CSG225825R1101		0.32	1
400	0.5	5	258353	CT PRO XT 400	2CSG225835R1101		0.32	1

CT PRO XT SELV …/5 series, through primary

40	3	2	258452	CT PRO XT 40 SELV	2CSG225845R1101		0.37	1
50	3	2	258551	CT PRO XT 50 SELV	2CSG225855R1101		0.37	1
60	3	2	258650	CT PRO XT 60 SELV	2CSG225865R1101		0.37	1
80	3	2	258650	CT PRO XT 80 SELV	2CSG225875R1101		0.37	1
100	1	3	258858	CT PRO XT 100 SELV	2CSG225885R1101		0.37	1
150	1	5	258957	CT PRO XT 150 SELV	2CSG225895R1101		0.37	1
200	1	5	259053	CT PRO XT 200 SELV	2CSG225905R1101		0.37	1
250	0.5	5	259152	CT PRO XT 250 SELV	2CSG225915R1101		0.37	1
300	0.5	5	259251	CT PRO XT 300 SELV	2CSG225925R1101		0.37	1
400	0.5	5	259350	CT PRO XT 400 SELV	2CSG225935R1101		0.37	1

Overall dimensions

	A	B	C	D	E	F	G
CT PRO XT …/5A	45	92	96	69	22	12	18

Accessories supplied:

– Sealed terminals cover
– Mounting accessory
– M5 self-threading screw

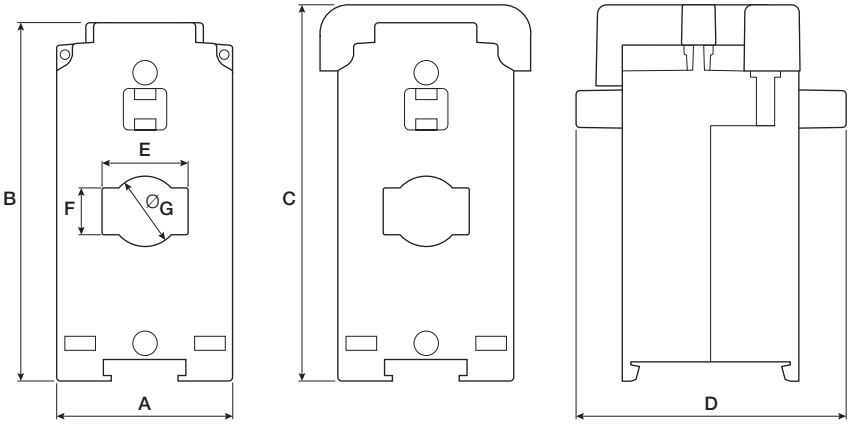

CT MAX, CT MAX SELV
Order codes



CT MAX series

Through primary		max section [mm]
cable	◯	30
horizontal bar	▭	30x15 40x10
vertical bar	▯	–

CT MAX

The CT MAX current transformer range founds its main application in distribution systems with 30x10 mm and 40x10 mm horizontal primary busbars and primary rated current from 300 up to 1000 A. A primary cable up to 30 mm in diameter can also be used. CT MAX transformers are the ideal solution for applications downstream ABB Tmax T5 and T6 circuit-breakers.

CT MAX …/5 A series, through primary

Primary rated current Iprim A	Accurancy class	Rated power VA	Bbn 8012542 EAN	Order details Type code	Order code	Price 1 piece	Weight 1 piece kg	Pack unit pc.
300	0,5	4	259459	CT MAX 300	2CSG225945R1101		0,32	1
400	0,5	5	259558	CT MAX 400	2CSG225955R1101		0,32	1
500	0,5	6	259558	CT MAX 500	2CSG225965R1101		0,32	1
600	0,5	10	259657	CT MAX 600	2CSG225975R1101		0,32	1
800	0,5	10	259657	CT MAX 800	2CSG225985R1101		0,32	1
1000	0,5	10	259954	CT MAX 1000	2CSG225995R1101		0,32	1

CT MAX SELV …/5 series, through primary

300	0,5	4	260059	CT MAX 300 SELV	2CSG226005R1101		0,37	1
400	0,5	5	260158	CT MAX 400 SELV	2CSG226015R1101		0,37	1
500	0,5	6	260257	CT MAX 500 SELV	2CSG226025R1101		0,37	1
600	0,5	10	260356	CT MAX 600 SELV	2CSG226035R1101		0,37	1
800	0,5	10	260455	CT MAX 800 SELV	2CSG226045R1101		0,37	1
1000	0,5	10	260554	CT MAX 1000 SELV	2CSG226055R1101		0,37	1

Overall dimensions

	A	B	C	D	E	F	G	H	L
CT MAX …/5A	70	107	111	69	32	12	30	15	42

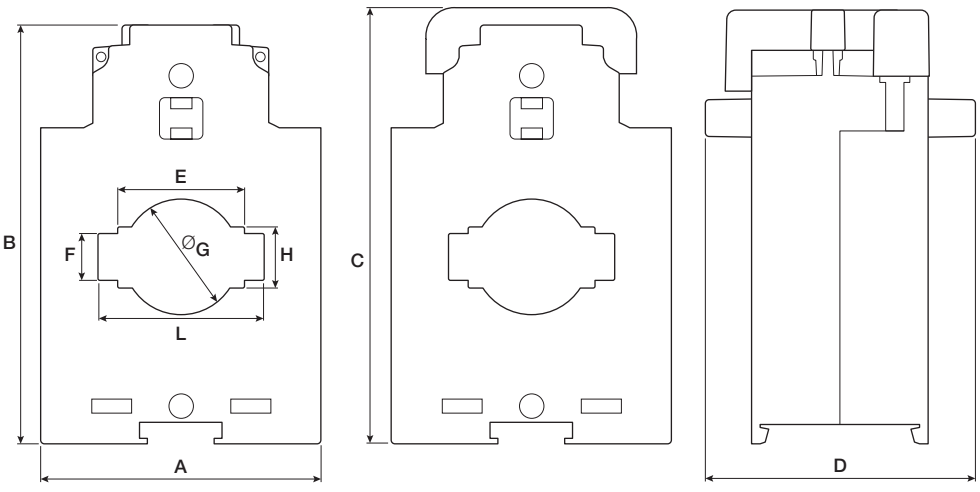

Accessories supplied:

- Sealed terminals cover
- Mounting accessory
- M5 self-threading screw
- Accessories and screws for wall mounting

CT Current transformers
Order codes

Current transformers with wound primary



CTA .../5 A series, wound primary with insertion on Ø8 MA bolt

Primary rated current Iprim A	Accuracy class	Rated power VA	Bbn 8012542 EAN	Order details Type code	Order code	Price 1 piece	Weight 1 piece kg	Pack unit pc.
5	0.5	5	661306	CTA/5	2CSG111020R1141		0.290	1
10	0.5	5	661405	CTA/10	2CSG111030R1141		0.290	1
15	0.5	5	661504	CTA/15	2CSG111040R1141		0.290	1
20	0.5	5	661603	CTA/20	2CSG111050R1141		0.290	1
25	0.5	5	661702	CTA/25	2CSG111060R1141		0.290	1
40	0.5	5	661801	CTA/40	2CSG111080R1141		0.290	1
50	0.5	5	661900	CTA/50	2CSG111090R1141		0.290	1
60	0.5	5	662006	CTA/60	2CSG111100R1141		0.290	1
80	0.5	5	662105	CTA/80	2CSG111110R1141		0.290	1
100	0.5	5	662204	CTA/100	2CSG111120R1141		0.290	1

Current transformers with through primary



CT6 .../5 A series, through primary

Primary rated current Iprim A	Accuracy class	Rated power VA	Bbn 8012542 EAN	Order details Type code	Order code	Price 1 piece	Weight 1 piece kg	Pack unit pc.
250	0.5	5	605508	CT6/250	2CSG421130R1101		1.000	1
300	0.5	5	605607	CT6/300	2CSG421140R1101		1.000	1
400	0.5	6	605706	CT6/400	2CSG421150R1101		1.000	1
500	0.5	6	605805	CT6/500	2CSG421160R1101		1.000	1
600	0.5	10	605904	CT6/600	2CSG421170R1101		1.000	1
800	0.5	10	606000	CT6/800	2CSG421180R1101		1.000	1
1000	0.5	20	606109	CT6/1000	2CSG421190R1101		1.000	1
1200	0.5	20	606208	CT6/1200	2CSG421200R1101		1.000	1
1500	0.5	30	606307	CT6/1500	2CSG421220R1101		1.000	1
2000	0.5	30	606406	CT6/2000	2CSG421230R1101		1.000	1
2500	0.5	30	606505	CT6/2500	2CSG421240R1101		1.000	1



CT8 .../5 A series, through primary

300	0.5	5	606604	CT8/300	2CSG521140R1101		1.000	1
400	0.5	6	606703	CT8/400	2CSG521150R1101		1.000	1
500	0.5	10	606802	CT8/500	2CSG521160R1101		1.000	1
600	0.5	10	606901	CT8/600	2CSG521170R1101		1.000	1
800	0.5	10	607007	CT8/800	2CSG521180R1101		1.000	1
1000	0.5	10	607106	CT8/1000	2CSG521190R1101		1.000	1
1200	0.5	15	607205	CT8/1200	2CSG521200R1101		1.000	1
1500	0.5	20	607304	CT8/1500	2CSG521220R1101		1.000	1
2000	0.5	20	607403	CT8/2000	2CSG521230R1101		1.000	1
2500	0.5	20	607502	CT8/2500	2CSG521240R1101		1.000	1
3000	0.5	20	607601	CT8/3000	2CSG521250R1101		1.000	1

CTA series

Wound primary		max section [mm]
cable	◯	8
horizontal bar	▭	–
vertical bar	▯	–

CT6 series

Through primary		max section [mm]
cable	◯	50
horizontal bar	▭	60x20
vertical bar	▯	–

CT8 series

Through primary		max section [mm]
cable	◯	2x30
horizontal bar	▭	80x30
vertical bar	▯	–

Trasformatori amperometrici a primario passante



CT8-V .../5 A series, through primary

Primary rated current Iprim A	Accurancy class	Rated power VA	Bbn 8012542 EAN	Order details Type code	Order code	Price 1 piece	Weight 1 piece kg	Pack unit pc.
400	0.5	6	608707	CT8-V/400	2CSG631150R1101		0.800	1
500	0.5	10	608806	CT8-V/500	2CSG631160R1101		0.800	1
600	0.5	10	608905	CT8-V/600	2CSG631170R1101		0.800	1
800	0.5	10	609001	CT8-V/800	2CSG631180R1101		0.800	1
1000	0.5	10	609100	CT8-V/1000	2CSG631190R1101		0.800	1
1200	0.5	10	609209	CT8-V/1200	2CSG631200R1101		0.800	1
1500	0.5	10	609308	CT8-V/1500	2CSG631220R1101		0.800	1
2000	0.5	20	609407	CT8-V/2000	2CSG631230R1101		0.800	1
2500	0.5	20	609506	CT8-V/2500	2CSG631240R1101		0.800	1



CT12 .../5 A series, through primary

500	0.5	10	607700	CT12/500	2CSG721160R1101		1.600	1
600	0.5	10	607809	CT12/600	2CSG721170R1101		1.600	1
800	0.5	15	607908	CT12/800	2CSG721180R1101		1.600	1
1000	0.5	20	608004	CT12/1000	2CSG721190R1101		1.600	1
1200	0.5	20	608103	CT12/1200	2CSG721200R1101		1.600	1
1500	0.5	20	608202	CT12/1500	2CSG721220R1101		1.600	1
2000	0.5	30	608301	CT12/2000	2CSG721230R1101		1.600	1
2500	0.5	40	608400	CT12/2500	2CSG721240R1101		1.600	1
3000	0.5	40	608509	CT12/3000	2CSG721250R1101		1.600	1
4000	0.5	50	608608	CT12/4000	2CSG721260R1101		2.000	1
5000	0.5	50	745600	CT12/5000	2CSG721270R1101		3.000	1
6000	0.5	50	745709	CT12/6000	2CSG721280R1101		3.000	1



CT12-V .../5 A series, through primary

800	0.5	10	609605	CT12-V/800	2CSG831180R1101		0.700	1
1000	0.5	10	609704	CT12-V/1000	2CSG831190R1101		0.700	1
1200	0.5	10	609803	CT12-V/1200	2CSG831200R1101		0.700	1
1250	0.5	10	609902	CT12-V/1250	2CSG831210R1101		0.700	1
1500	0.5	12	610007	CT12-V/1500	2CSG831220R1101		0.700	1
2000	0.5	15	610106	CT12-V/2000	2CSG831230R1101		1.000	1
2500	0.5	20	610205	CT12-V/2500	2CSG831240R1101		1.000	1
3000	0.5	20	610304	CT12-V/3000	2CSG831250R1101		1.000	1
4000	0.5	20	745808	CT12-V/4000	2CSG831260R1101		1.000	1

CT8-v series

Through primary	max section [mm]
cable	2x35
horizontal bar	–
vertical bar	80x30 3x80x5

CT12 series up to 4000A

Through primary	max section [mm]
cable	2x50
horizontal bar	80x50 100x50 125x50
vertical bar	-

CT12 5000 and CT12 6000 series

Through primary	max section [mm]
cable	-
horizontal bar	120x10 2x120x10 3x120x10
vertical bar	200x10 2x200x10 3x200x10

CT12-v series

Through primary	max section [mm]
cable	3x35
horizontal bar	-
vertical bar	125x30 3x100x10 4x100x5 4x125x5

CT Current transformers
Order codes



CT30 series

Through primary		max section [mm]
cable	◯	–
horizontal bar	▭	–
vertical bar	▯	2x30x10

CT80 series

Through primary		max section [mm]
cable	◯	–
horizontal bar	▭	–
vertical bar	▯	3x80x10

CT120 series

Through primary		max section [mm]
cable	◯	–
horizontal bar	▭	–
vertical bar	▯	4x120x10

Split core measurement current transformers with throug primary

Split core measurement current transformers are used in distribution panels or power centers for maintenance or system expansion. They can be installed easily and they allows to save a lot of time, avoiding bar disconnection. All transformers are complete with terminal caps and fastening accessories, both on bar and on wall.

Primary rated current Iprim A	Accurancy class	Rated power VA	Bbn 8012542 EAN	Order details Type code	Order code	Price 1 piece	Weight 1 piece kg	Pack unit pc.
CT30/...5 A Split core current transformers								
100	3	1.5	887805	CT30/100	2CSG101100R1101		0.85	1
150	3	2	887904	CT30/150	2CSG101110R1101		0.85	1
250	0.5	1.5	888109	CT30/250	2CSG101130R1101		0.85	1
400	0.5	2.5	888000	CT30/400	2CSG101150R1101		0.85	1
CT80/...5 A Split core current transformers								
250	0.5	1	888208	CT80/250	2CSG201130R1101		1.1	1
400	0.5	1.5	888307	CT80/400	2CSG201150R1101		1.1	1
500	0.5	2.5	888406	CT80/500	2CSG201160R1101		1.1	1
600	0.5	2.5	888505	CT80/600	2CSG201170R1101		1.1	1
800	0.5	3	888604	CT80/800	2CSG201180R1101		1.1	1
1000	0.5	5	888703	CT80/1000	2CSG201190R1101		1.1	1
CT120/...5 A Split core current transformers								
400	0.5	1.5	889007	CT120/400	2CSG401150R1101		1.3	1
500	0.5	2.5	889106	CT120/500	2CSG401160R1101		1.3	1
600	0.5	2.5	889205	CT120/600	2CSG401170R1101		1.3	1
800	0.5	3	889304	CT120/800	2CSG401180R1101		1.3	1
1000	0.5	5	889403	CT120/1000	2CSG401190R1101		1.3	1
1200	0.5	6	889502	CT120/1200	2CSG401200R1101		1.3	1
1500	0.5	8	889601	CT120/1500	2CSG401220R1101		1.3	1

Modular current transformers with Ø 29 mm through primary, secondary .../5A

TRF M are modular current transformers with through primary for measuring instruments. Their compact size and quick DIN rail plug allow easy installation along with great measurement precision.



Primary rated current Iprim A	Accurancy class	Rated power VA	Bbn 8012542 EAN	Order details Type code	Order code	Price 1 piece	Weight 1 piece kg	Pack unit pc.
40	3	1	046912	TRFM/40	2CSM100050R1111		0.721	4
60	1	2	047018	TRFM/60	2CSM100070R1111		0.744	4
100	0.5	2	047117	TRFM/100	2CSM100090R1111		0.744	4
150	0.5	3	047216	TRFM/150	2CSM100100R1111		0.712	4
250	0.5	4	047315	TRFM/250	2CSM100120R1111		0.746	4
400	0.5	6	047407	TRFM/400	2CSM100140R1111		0.780	4
600	0.5	7	047506	TRFM/600	2CSM100160R1111		0.859	4

CT Current transformers
Overall dimensions

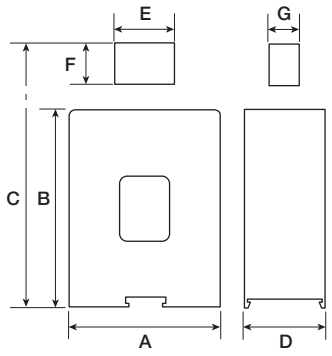

Product	A	B	C	D	E	F	G	Central section	H	L	M	N	O	P
CTA (from 1 to 25 A)	56	83	85	63	56	15	45	–	–	–	–	–	–	–
CTA (from 40 to 100 A)	56	83	85	63	56	15	45	5	17	–	–	–	–	–
CT6	105	100	121	61	50	18.5	21	1	64.7	22.5	54.4	20.4	51.3	–
CT8	125	120	142	61.5	50	18.5	21	2	82.5	34.6	64.7	32.5	–	–
CT8-v	109	119	141	41	50	18.5	21	3	37.7	80.6	–	–	–	–
CT12 (up to 4000A)	180	175	196	68.5	50	18.5	21	4	127.3	58.3	102.3	82.2	54.3	56.3
CT12 5000, CT12 6000	272	265	290	50	–	–	–	3	127	203	–	–	–	–
CT12-v	109	165	186	41	50	18.5	21	3	37.5	126	–	–	–	–
CT30…	93	106	–	34	–	–	–	3	20	30	–	–	–	–
CT80…	125	152	–	34	–	–	–	3	50	80	–	–	–	–
CT120…	155	198	–	34	–	–	–	3	80	120	–	–	–	–

Measurements in mm

1 2 3 4 5

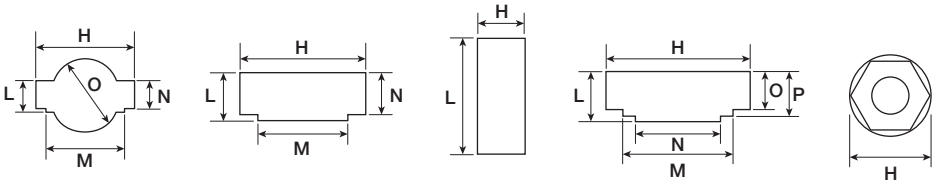

Product	A	B	C	D	E	F	G
TRF M	52.5	85.5	44	58	65	45	29

Measurements in mm

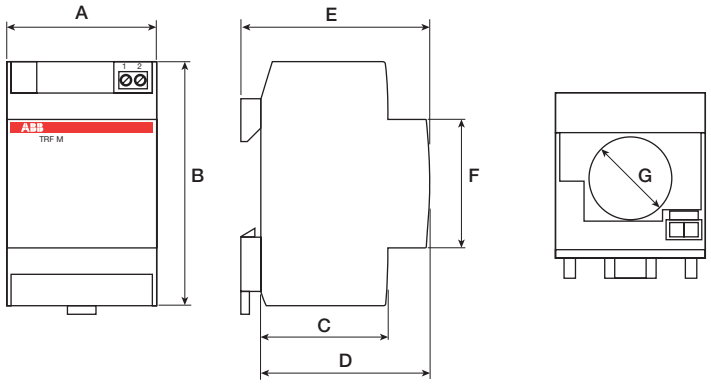

How do you establish the diameter of the through section required by the application when choosing a current transformer?

he choice is made considering the section of the cable that should pass through the primary of the current transformer. For example, if the cable section is 95 mm², the following formula must be applied:

– $section = r^2 \; x \; 3.14$ hence $r = \sqrt{section/3.14}$. Considering the example above:
$r = \sqrt{95/3.14} = 5.5 \; mm$, thus the radius is 5.5 mm

– $diameter = r + r = 5.5 + 5.5 = 11 \; mm$. This measure represents the diameter of the copper section. The thickness of the insulating material must be added, leading to an overall cable diameter of about 20 mm.

CT Current transformers
Technical details

Power consumption of copper cables between the measurement device and the current transformer

The power dissipated by the cables connected to the CT can be calculated by using their length and section dimension, as indicated in the table below.

Cable section	5A Secondary nominal current power (two-pole cable) - length					
mm²	1 m	2 m	4 m	6 m	8 m	10 m
1.5	0.58	1.15	2.31	3.46	4.62	5.77
2.5	0.36	0.71	1.43	2.14	2.86	3.57
4	0.22	0.45	0.89	1.34	1.79	2.24
6	0.15	0.3	0.6	0.89	1.19	1.49

Maximum load (A) on the copper busbars according to DIN 43670 and 43671 standards

Busbar dimensions	Rated current (In) A		
mm	1 busbar	2 busbars	3 busbars
20X5	325	560	
20X10	427	925	1180
30X5	379	672	896
30X10	573	1060	1480
40X5	482	836	1090
40X10	715	1290	1770
50X10	852	1510	2040
60X10	985	1720	2300
80X10	1240	2110	2790
100X10	1490	2480	3260

Accuracy class of the current transformer according to IEC 60044-1

Accuracy class	Current error in percentage (±) in respect to the rated current value				Phase displacement (±) in respect to the rated current value			
	0.05 In	0.2 In	In	1.2 In	0.05 In	0.2 In	In	1.2 In
0.5	± 1	± 0.75	± 0.5	± 0.5	± 1.8	± 1.35	± 0.9	± 0.9
1	± 2	± 1.5	± 1	± 1	± 3.6	± 2.7	± 1.8	± 1.8
3	da 0.5 In a 1.2 In = ± 3				nessuna prescrizione			

Class 0.5 is required for energy meters
Class 1 is required for measuring instruments and energy meters for non-fiscal use
Class 3 is required for relays and protection devices

Error Curves

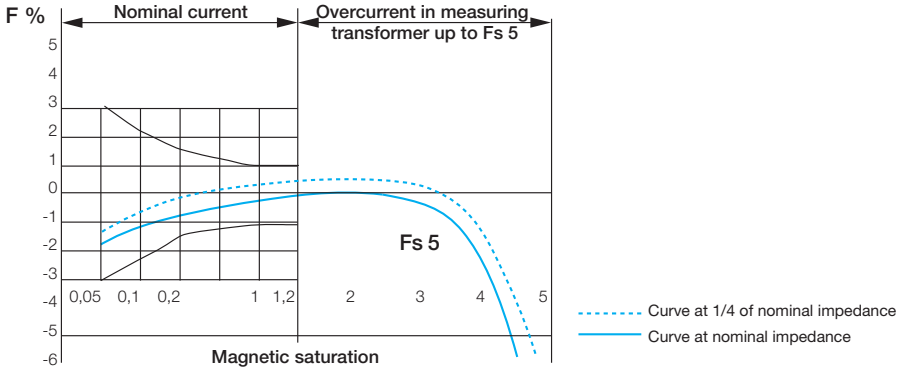

CT Current transformers
Questions & answers

Can the incorrect installation of the current transformer affect the measurement of the connected device?

Certainly! Reversal of the connections to the TA's secondary terminals or the wrong insertion of the primary cable can cause an incorrect measurement readings from the instrument.
If one of the above situations occurs, the instrument measures a secondary current on its terminals that flows in the opposite direction of what actually happens.
This can lead to different consequences depending on how the firmware of the measuring device has been designed. A wrong connection in unidirectional instruments (reading on 2 quadrants) may be signaled by an error message. On the other hand, it may not be signaled but cause an incorrect count of the instrument, or lead to the interruption of the measurement process. In bidirectional instruments (reading on 4 quadrants), this situation causes the imported power to be read as exported power and vice versa.

Is it necessary to earth the secondary terminals of the current transformer?

Earthing the secondary terminals of current transformers provides a reference towards earth in case of transformer failure, and prevents dangers for persons or risks of damage for the device installed in the switchboard. This does not affect the measurements made by ABB instruments thus, when the wiring is being made, it is always recommended to comply with the indications in the instruction manual provided along with the measurement devices.

In practical terms, how does the accuracy of an energy meter and the respective current transformer affect the measuring chain, energy saving and efficiency evaluations?

To achieve Smart Metering, it is particularly important to know the accuracy class of an instrument in order to assess whether the accuracy of the measurement can be considered satisfactory. The importance of that can be understood analysing the practical example below. Consider an installation with an average 100kW of energy consumption working 2,000 hours per year. To evaluate the accuracy of a metering unit composed by network analyser or energy meter, and current transformers, the propagation of error and its incidence on the final measure can be calculated with the following formula:

$$\varepsilon_E = \sqrt[2]{\varepsilon_c^{\,2} + \varepsilon_{ct}^{\,2}}$$

Where:
ε_E = *percentage error of the energy measured*
ε_c = *percentage error of the energy meter*
ε_{ct} = *percentage error of the current transformer*

The following table shows how the variation in the accuracy class of the measuring device and the associated current transformers affects the overall accuracy of the system.

	Example 1	Example 2	Example 3
ε_{ct}	0.5%	1%	2%
ε_c	0.5%	1%	2%
ε_E	0.71%	1.41%	2.83%
Annual consumption measured with error	201,420 kWh	202,820 kWh	205,650 kWh
Average cost of energy	0.18 €/kWh	0.18 €/kWh	0.18 €/kWh
Overall expense	36,256 €	36,507 €	37,017 €

The choice of an instrument with a higher degree of accuracy results in a measurement that is more accurate and with less chance of errors when consumption is assessed.
The beneficial effect is that the more the error decreases the less will be the cost of energy. This is the reason why the standards governing the use of measuring instruments for billing applications (MID) prescribe the use of meters and current transformers whose accuracy must remain within a well defined range.

Contacts

ABB SACE
A division of ABB S.p.A.
Line Protection Devices
Viale dell'Industria, 18
20010 Vittuone (MI) - Italy
Tel.: +39 02 9034 1
Fax: +39 02 9034 7609

www.abb.com

The data and illustrations are not binding. We reserve the right to modify the contents of this document on the basis of technical development of the products, without prior notice.

Copyright 2014 ABB. All right reserved.

2CSC446012B0201 - 04/2014 - 2.000 Pz. - CAL

Power and productivity
for a better world™