P 25 TF

AYP_001_HC_HH_HY-AYL_001_HP.XX_NOTES_UL.category

- No order designation, order individual appertaining products

Material	Pressed steel

Dimensions

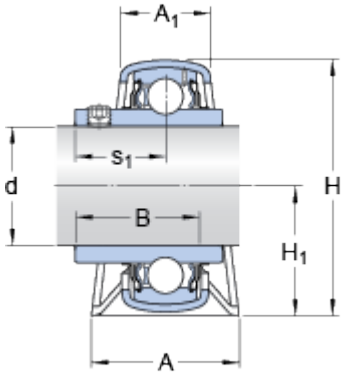

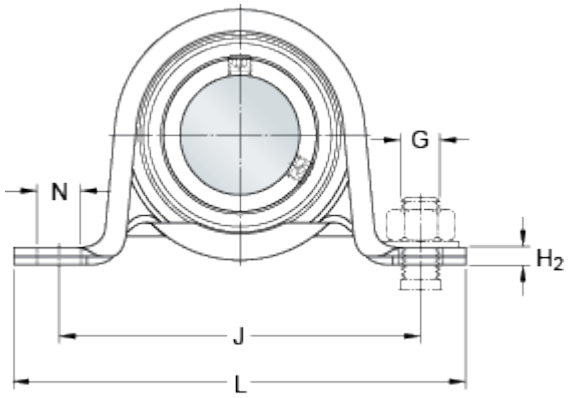

d	25	mm
A	32	mm
A_1	23	mm
B	34.1	mm
H	54	mm
H_1	28.4	mm
H_2	3.2	mm
J	86	mm
L	108	mm
N	11.2	mm
s_1	19.8	mm

Dowel pins

Grease fitting

Threaded hole

Calculation data

Basic dynamic load rating	C		14	kN
Basic static load rating	C_0		7.8	kN
Fatigue load limit	P_u		0.335	kN
Permissible radial housing load		max.	1.8	kN
Limiting speed			7000	r/min

(with shaft tolerance h6)

Mass

Mass of unit		0.27	kg

Mounting information

Hexagonal key size for grub screw	N	3	mm
Recommended tightening torque for grub screw		4	N·m
Recommended diameter for attachment bolts, mm	G	10	mm
Recommended diameter for attachment bolts, inch	G	0.375	in

Appertaining products

Housing	P 52
Bearing	YAR 205-2F