TABLE 1

MOLEX P/N	ENG. NO.	CABLE LENGTH (mm)	LED
1202510028	BKB8050-FBW-05	5000	NO
1202510029	BKB8050-FBW-10	10000	NO
1202510030	BKB8050-FBW-15	15000	NO
1202510031	BKB805P-FBW-05	5000	YES
1202510032	BKB805P-FBW-10	10000	YES
1202510033	BKB805P-FBW-15	15000	YES
1202510034	BKB805N-FBW-05	5000	YES
1202510035	BKB805N-FBW-10	10000	YES
1202510036	BKB805N-FBW-15	15000	YES

TABLE 2

ITEM	DESCRIPTION	MATERIAL	FINISH
1	LABEL	ABS	WHITE
2	CABLE PLATE	PBT	BLACK
3	CABLE	TPU BASED	BLACK
4	CONTACT	BRONZE	GOLD OVER NICKEL
5	O-RING	FPM	RED
6	LED	NON LED = PBT	BLACK
		WITH LED = PA	TRANSPARENT
7	SHELL	BRASS	NICKEL PLATED
8	HOUSING	PBT	BLACK

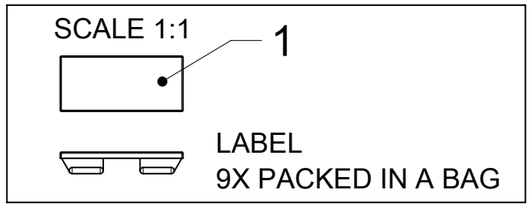

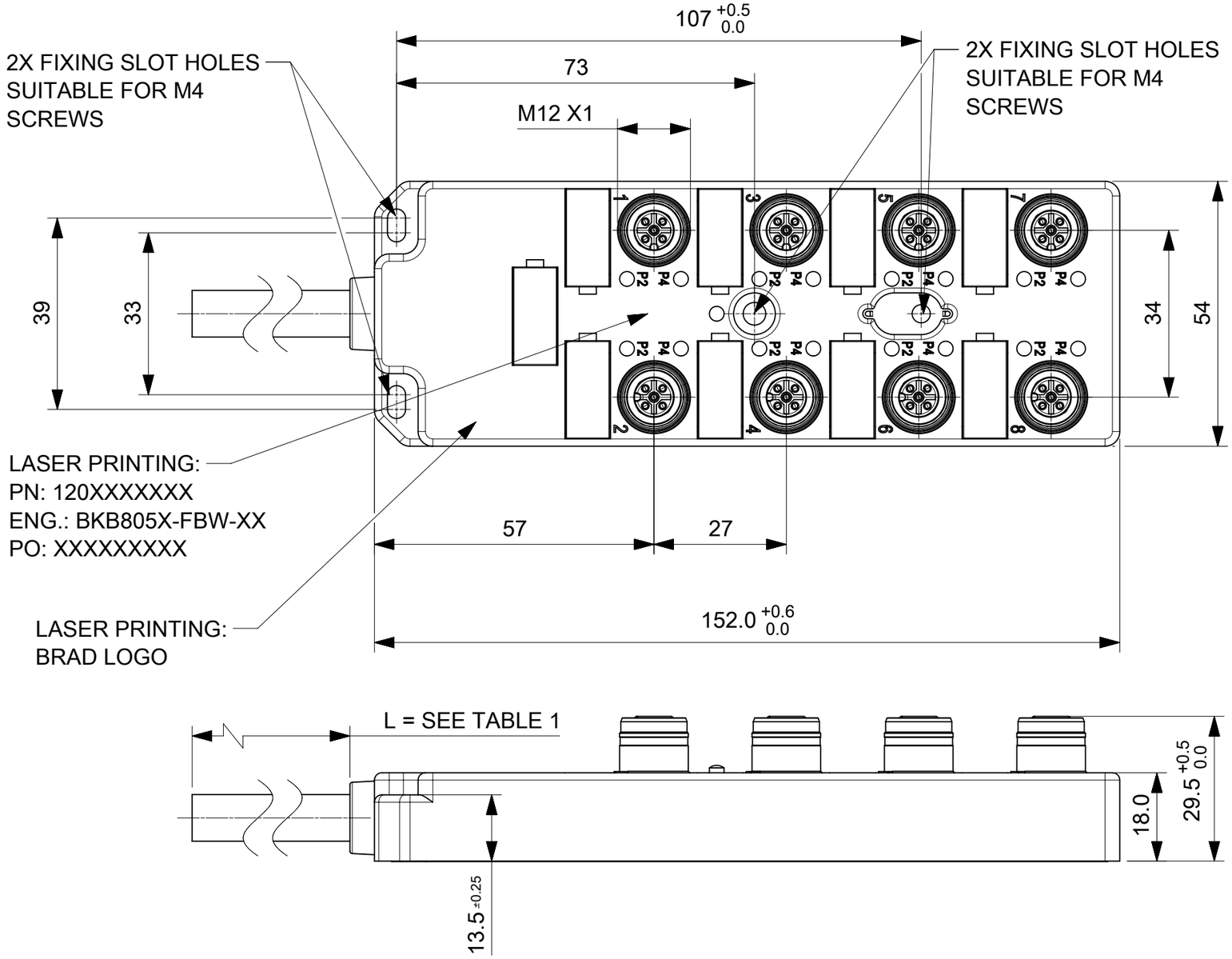

GENERAL CHARACTERISTICS:

ELECTRICAL AND MECHANICAL DATA ACC. TO IEC 61076-2-101

NOMINAL VOLTAGE:	10-30 V DC
AMPERE RATING:	4 A PER PORT / 12 A MAX
AMPERE RATING WITH UL REGISTRATION:	3 A PER PORT / 9 A MAX
IP DEGREE OF PROTECTION:	IP 67
TEMPERATURE RANGE:	-25°C to + 85°C

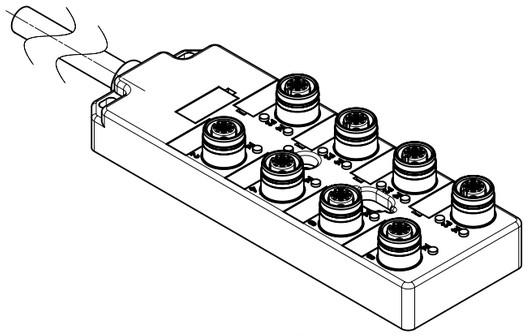

SCALE 1:2

SYMBOLS	
FA	= 0
FC	= 0
FB	= 0
S	= 0
▼	= 0
C	= 0
☒	= 0
■	= 0
V	= 0

THIS DRAWING CONTAINS INFORMATION THAT IS PROPRIETARY TO MOLEX ELECTRONIC TECHNOLOGIES, LLC AND SHOULD NOT BE USED WITHOUT WRITTEN PERMISSION

DIMENSION UNITS	SCALE
mm	1:1

GENERAL TOLERANCES (UNLESS SPECIFIED)

ANGULAR TOL	±	°
4 PLACES	±	
3 PLACES	±	
2 PLACES	±	
1 PLACE	±	
0 PLACES	±	0.25

DRAFT WHERE APPLICABLE MUST REMAIN WITHIN DIMENSIONS

CURRENT REV DESC:

EC NO: 631635
DRWN: MDHARMANTI 2020/01/27
CHK'D: RSILLER 2020/02/05
APPR: RSILLER 2020/02/05

INITIAL REVISION:
DRWN: ULETTENMEIER 2018/07/26
APPR: RSILLER 2020/01/17

THIRD ANGLE PROJECTION

DRAWING	SERIES
A3-SIZE	120251

molex

MPIS U12 NON PNP NPN 5P 8PT BK XM DUAL

PRODUCT CUSTOMER DRAWING

DOCUMENT NUMBER	DOC TYPE	DOC PART	REVISION
1202510028	PSD	000	A1

MATERIAL NUMBER	CUSTOMER	SHEET NUMBER
SEE TABLE 1	GENERAL MARKET	1 OF 2

DOCUMENT STATUS	P1	RELEASE DATE	2020/02/05	10:52:06

FORMAT: master-tb-mod-A3
REVISION: H
DATE: 2018/01/16

Wiring Diagram NON LED Dual

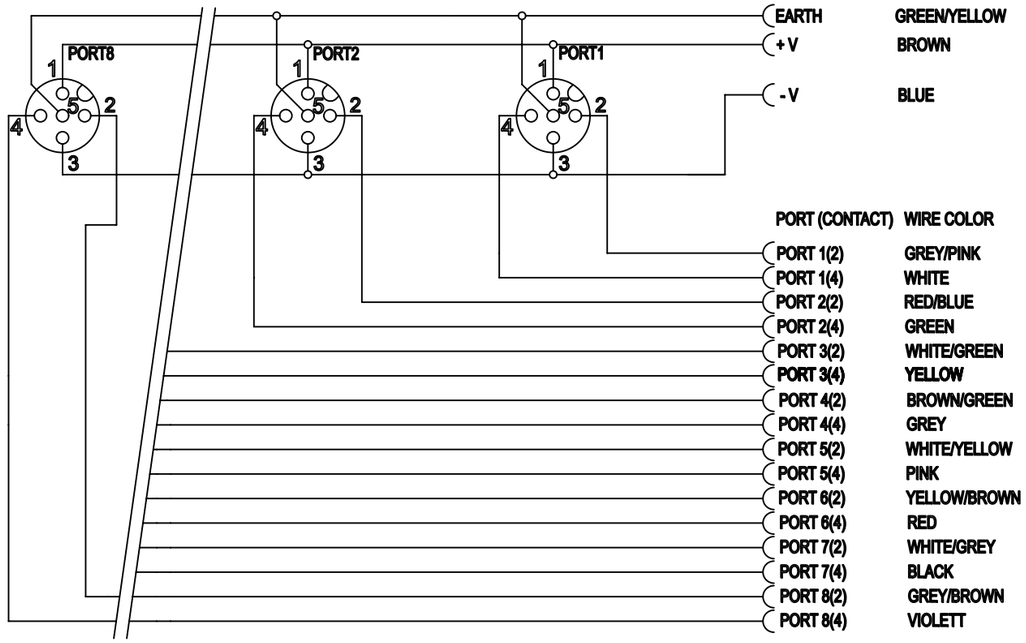

FUNCTION	WIRE COLOR
EARTH	GREEN/YELLOW
+V	BROWN
-V	BLUE

PORT (CONTACT)	WIRE COLOR
PORT 1(2)	GREY/PINK
PORT 1(4)	WHITE
PORT 2(2)	RED/BLUE
PORT 2(4)	GREEN
PORT 3(2)	WHITE/GREEN
PORT 3(4)	YELLOW
PORT 4(2)	BROWN/GREEN
PORT 4(4)	GREY
PORT 5(2)	WHITE/YELLOW
PORT 5(4)	PINK
PORT 6(2)	YELLOW/BROWN
PORT 6(4)	RED
PORT 7(2)	WHITE/GREY
PORT 7(4)	BLACK
PORT 8(2)	GREY/BROWN
PORT 8(4)	VIOLETT

Wiring Diagram PNP Dual

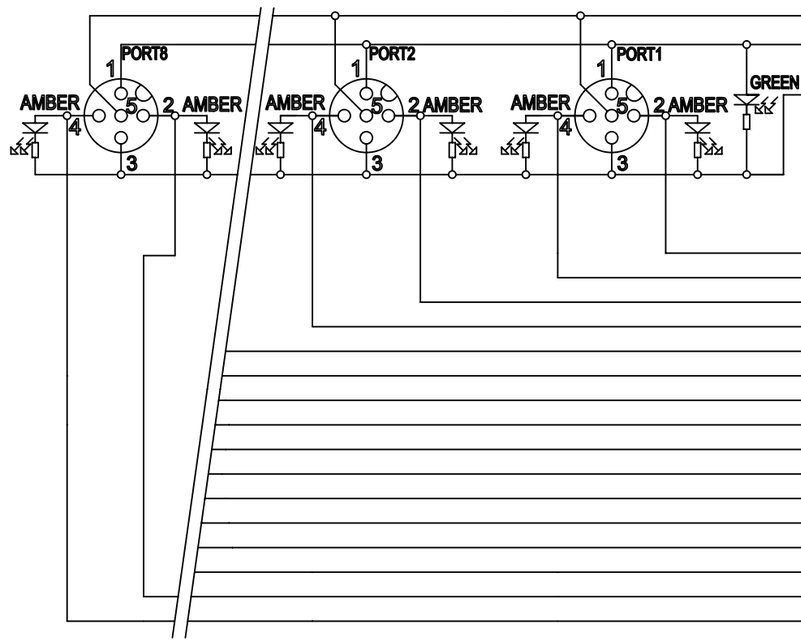

FUNCTION	WIRE COLOR
EARTH	GREEN/YELLOW
+V	BROWN
-V	BLUE

PORT (CONTACT)	WIRE COLOR
PORT 1(2)	GREY/PINK
PORT 1(4)	WHITE
PORT 2(2)	RED/BLUE
PORT 2(4)	GREEN
PORT 3(2)	WHITE/GREEN
PORT 3(4)	YELLOW
PORT 4(2)	BROWN/GREEN
PORT 4(4)	GREY
PORT 5(2)	WHITE/YELLOW
PORT 5(4)	PINK
PORT 6(2)	YELLOW/BROWN
PORT 6(4)	RED
PORT 7(2)	WHITE/GREY
PORT 7(4)	BLACK
PORT 8(2)	GREY/BROWN
PORT 8(4)	VIOLETT

Wiring Diagram NPN Dual

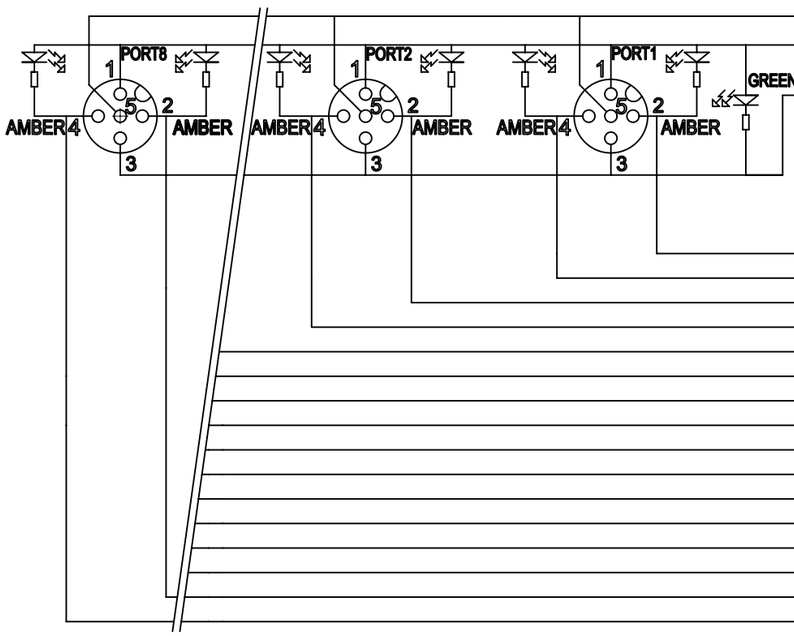

FUNCTION	WIRE COLOR
EARTH	GREEN/YELLOW
+V	BROWN
-V	BLUE

PORT (CONTACT)	WIRE COLOR
PORT 1(2)	GREY/PINK
PORT 1(4)	WHITE
PORT 2(2)	RED/BLUE
PORT 2(4)	GREEN
PORT 3(2)	WHITE/GREEN
PORT 3(4)	YELLOW
PORT 4(2)	BROWN/GREEN
PORT 4(4)	GREY
PORT 5(2)	WHITE/YELLOW
PORT 5(4)	PINK
PORT 6(2)	YELLOW/BROWN
PORT 6(4)	RED
PORT 7(2)	WHITE/GREY
PORT 7(4)	BLACK
PORT 8(2)	GREY/BROWN
PORT 8(4)	VIOLETT

CABLE LENGTH TOLERANCES

LENGTH [m]	TOLERANCE [mm]
0-1	+40
>1-5	+60
>5-10	+80
>10-20	+140
>20-30	+160
>30	+1% length

SYMBOLS
E = 0
C = 0
B = 0
S = 0
▼ = 0
A = 0
☒ = 0
■ = 0
▽ = 0

THIS DRAWING CONTAINS INFORMATION THAT IS PROPRIETARY TO MOLEX ELECTRONIC TECHNOLOGIES, LLC AND SHOULD NOT BE USED WITHOUT WRITTEN PERMISSION

DIMENSION UNITS	SCALE
mm	1:1

GENERAL TOLERANCES (UNLESS SPECIFIED)

ANGULAR TOL	±	°
4 PLACES	±	
3 PLACES	±	
2 PLACES	±	
1 PLACE	±	
0 PLACES	±	0.25

DRAFT WHERE APPLICABLE MUST REMAIN WITHIN DIMENSIONS

CURRENT REV DESC:

EC NO: 631635
DRWN: MDHARMANTI 2020/01/27
CHK'D: RSILLER 2020/02/05
APPR: RSILLER 2020/02/05

INITIAL REVISION:
DRWN: ULETTENMEIER 2018/07/26
APPR: RSILLER 2020/01/17

THIRD ANGLE PROJECTION | DRAWING: A3-SIZE | SERIES: 120251

molex

MPIS U12 NON PNP NPN 5P 8PT BK XM DUAL

PRODUCT CUSTOMER DRAWING

DOCUMENT NUMBER	DOC TYPE	DOC PART	REVISION
1202510028	PSD	000	A1

MATERIAL NUMBER	CUSTOMER	SHEET NUMBER
SEE TABLE 1	GENERAL MARKET	2 OF 2

DOCUMENT STATUS	P1	RELEASE DATE	2020/02/05 10:52:06

FORMAT: master_Sheet-A3
REVISION: H
DATE: 2018/01/16