7308 BECBJ

Popular item
SKF Explorer

Dimensions

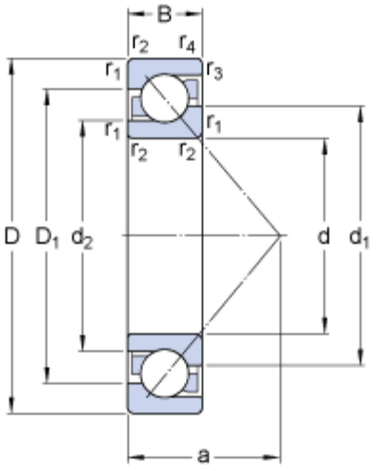

d		40	mm
D		90	mm
B		23	mm
d_1	≈	59.5	mm
d_2	≈	49.5	mm
D_1	≈	71.6	mm
a		39	mm
$r_{1,2}$	min.	1.5	mm
$r_{3,4}$	min.	1	mm

Abutment dimensions

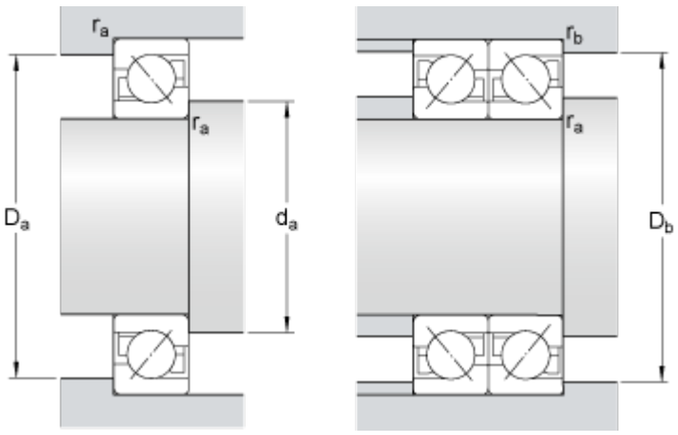

d_a	min.	49	mm
D_a	max.	81	mm
D_b	max.	84.4	mm
r_a	max.	1.5	mm
r_b	max.	1	mm

Calculation data

Basic dynamic load rating	C	50	kN
Basic static load rating	C_0	32.5	kN
Fatigue load limit	P_u	1.37	kN
Reference speed		9500	r/min
Limiting speed		10000	r/min
Calculation factor	A	0.0173	
Calculation factor	k_r	0.1	
Calculation factor	e	1.14	

Single bearing or bearing pair arranged in tandem

Calculation factor	X	0.35	

Calculation factor	Y_0	0.26
Calculation factor	Y_2	0.57

Bearing pair arranged back-to-back or face-to-face

Calculation factor	X	0.57
Calculation factor	Y_0	0.52
Calculation factor	Y_1	0.55
Calculation factor	Y_2	0.93

Mass

Mass bearing	0.64	kg