E21110

Clamp

SYSTEM COMPONENT CLAMP BOLT

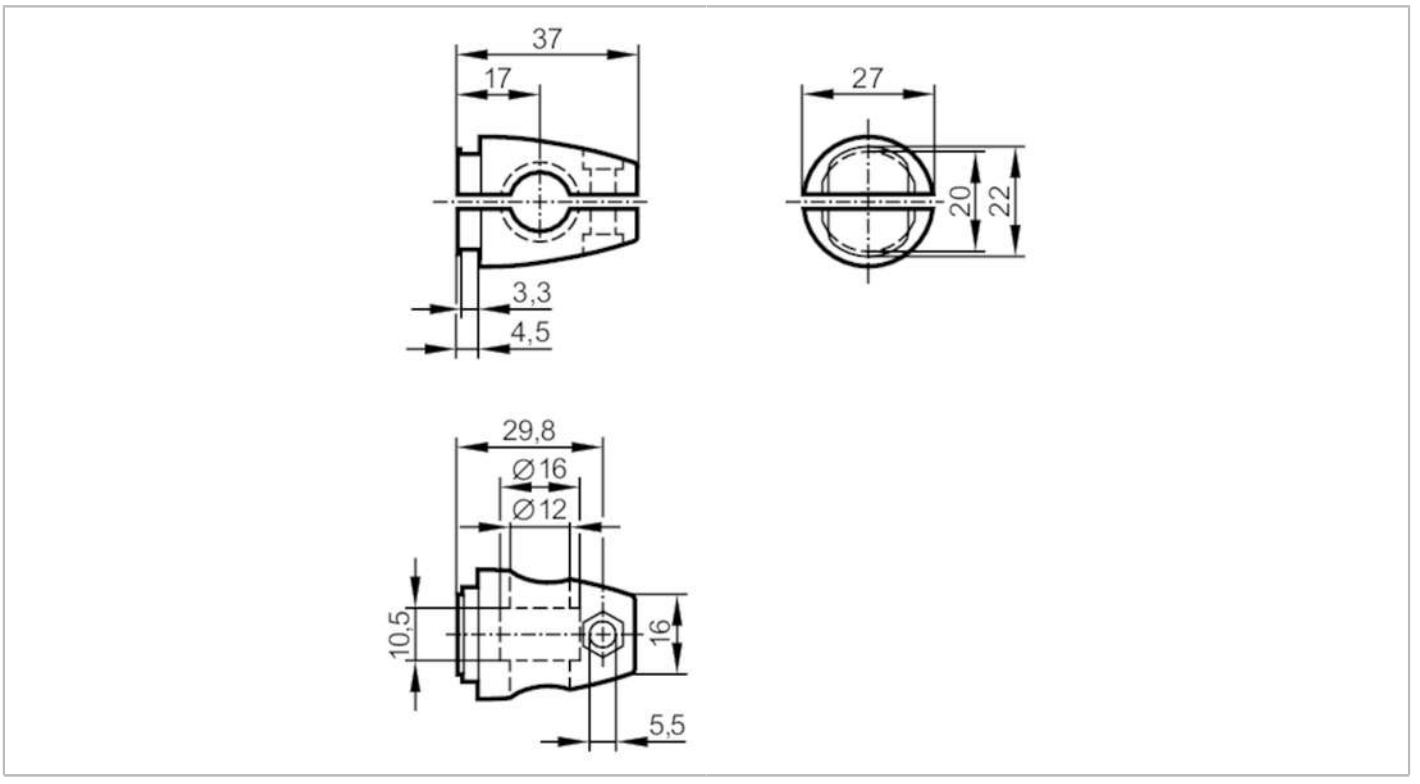

Mechanical data		
Weight	[g]	88.5
Type of mounting		Mounting rod; (Ø 12 mm)
Dimensions	[mm]	27 x 27 x 37
Materials		Clamp: stainless steel (1.4408)

Remarks	
Pack quantity	1 pcs.