6204-2RSH

SKF Explorer

Dimensions

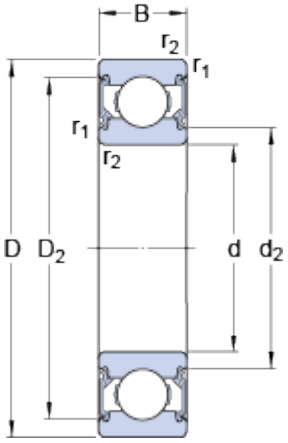

d		20	mm
D		47	mm
B		14	mm
d_2		26.05	mm
D_2		40.59	mm
$r_{1,2}$	min.	1	mm

Abutment dimensions

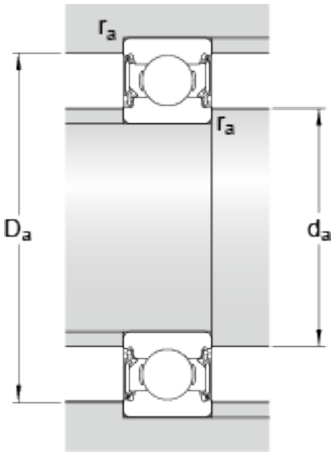

d_a	min.	25.6	mm
d_a	max.	26	mm
D_a	max.	41.4	mm
r_a	max.	1	mm

Calculation data

Basic dynamic load rating	C	13.5	kN
Basic static load rating	C_0	6.6	kN
Fatigue load limit	P_u	0.28	kN
Limiting speed		10000	r/min
Calculation factor	k_r	0.025	
Calculation factor	f_0	13	

Mass

Mass bearing		0.108	kg