PHAP5-30 series

Tact switches • 6 x 6 mm standard package



DISTINCTIVE FEATURES

Compact size
Positive tactile feed back
Through-hole or SMT

ENVIRONMENTAL SPECIFICATIONS

- Operating Temperature: -25 °C to +70 °C (-13 °F to +158 °F)
- Storage Temperature: -30 °C to +80 °C (-22 °F to +176 °F)



ELECTRICAL SPECIFICATIONS

- Contact rating: 50 mA 12 VDC
- Contact Resistance: 100 mΩ max.
- Insulation Resistance: 100 MΩ min. at 500 VDC
- Dielectric Strength: 250 VAC / 1 minute

MECHANICAL SPECIFICATIONS

- Operating force: 160 g ±50 g, 260 g ±50 g
- Mechanical life:
  - 100,000 cycles min. for 260 g
  - 200,000 cycles min. for 160 g
- Travel: 0.25 mm

MATERIALS

- Body: Polyamide
- Contact: Silver plated phosphor bronze
- Cover: Stainless Steel
- Terminal: Silver plated brass
- Actuator: Polyamide

The company reserves the right to change specifications without notice.

PHAP5-30 series

Tact switches • 6 x 6 mm standard package

PCB LAYOUT

30R THROUGH-HOLE

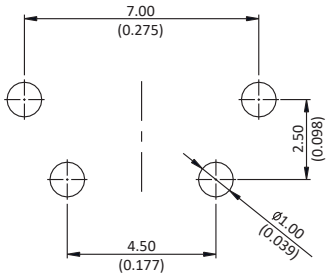

30R SURFACE MOUNT

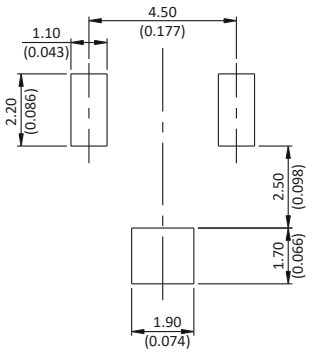

30V THROUGH-HOLE

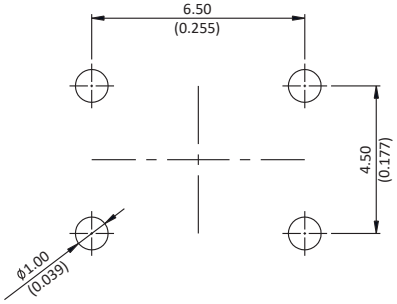

30V SURFACE MOUNT

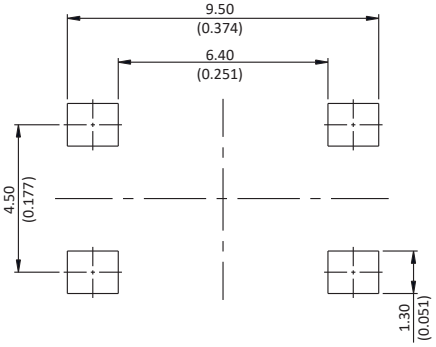

PACKAGING

	PACKAGING QUANTITY		
PART NUMBER	BAG	TUBE	TAPE AND REEL
PHAP5-30V•••T•••	1,000 pcs	-	-
PHAP5-30V•2A•S•••	-	77 pcs	1,000 pcs
PHAP5-30V•2B•S•••	-	77 pcs	900 pcs
PHAP5-30V•2K•S•••	-	77 pcs	700 pcs
PHAP5-30V•2C•S•••	-	77 pcs	700 pcs
PHAP5-30V•2D•S•••	-	77 pcs	380 pcs
PHAP5-30R•••T•••	500 pcs	-	-
PHAP5-30R•2A•S•••	-	-	500 pcs
PHAP5-30R•2B•S•••	-	-	500 pcs
PHAP5-30R•2C•S•••	-	-	380 pcs
PHAP5-30R•2D•S•••	-	-	380 pcs
PHAP5-30R•2K•S•••	-	-	380 pcs

PHAP5-30 series

Tact switches • 6 x 6 mm standard package

BUILD YOUR PART NUMBER

PHAP5- [ ] [ ] [ ] [ ] [ ] [ ]

SERIES

PHAP5-

PACKAGE

30	6 x 6 standard

STYLE

V	Vertical
R	Right angle

CONTACT M

A	Standard

HEIGHT/LENGTH (SPECIFIED DIMENSIONS)

2A	4.3 mm
2B	5 mm
2C	7 mm
2D	9.5 mm
2F	3.15 mm
2G	3.85 mm
2H	8.35 mm
2J	6.15 mm (2.4X2.4)
2K	7.30 mm (2.4X2.4)-(3.8X3.8)
2W	5.85 mm

See drawings for availability

FORCE

2	160 g
3	260 g

[ ] [ ] [ ] [ ] + [ ]

MOUNTING

T	Through-hole
S	Surface mount

GROUNDING

2	Non ground

WASHABLE

N	No sealing

PACKAGING

2	Bag
3	Tube
4	Tape and reel

See packaging table for availability

CAPS*

U5520	4 mm square cap
U5530	4.5 mm round cap

* Optional

PHAP5-30 series

Tact switches • 6 x 6 mm standard package

30R: 6 X 6 STANDARD - RIGHT ANGLE - THROUGH-HOLE



	Height H
PHAP5-30RA2F	3.15 (0.124)
PHAP5-30RA2G	3.85 (0.151)
PHAP5-30RA2W	5.80 (0.228)
PHAP5-30RA2J	6.15*(0.242)
PHAP5-30RA2H	8.35 (0.328)

*=2.40 (0.094) SQ for caps

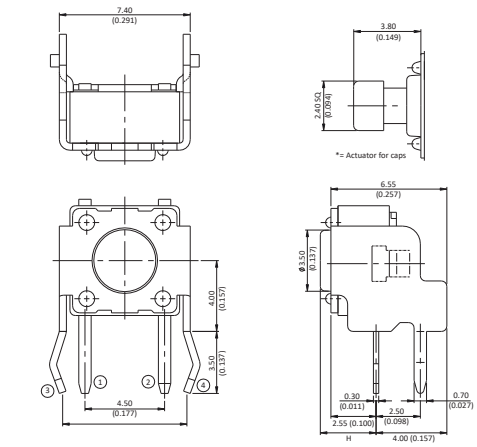

30R: 6 X 6 STANDARD - RIGHT ANGLE - SURFACE MOUNT

	Height H
PHAP5-30RA2A	4.30 (0.169)
PHAP5-30RA2B	5.00 (0.196)
PHAP5-30RA2C	7.00 (0.275)
PHAP5-30RA2D	9.50 (0.374)
PHAP5-30RA2K	7.30* (0.287)

*=2.40 (0.094) SQ for caps

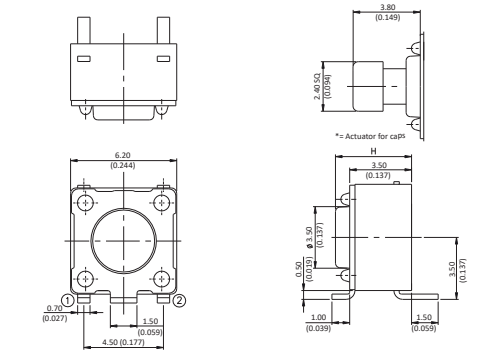

30V: 6 X 6 STANDARD - VERTICAL - THROUGH-HOLE



	Height H
PHAP5-30VA2A	4.30 (0.169)
PHAP5-30VA2B	5.00 (0.196)
PHAP5-30VA2C	7.00 (0.275)
PHAP5-30VA2D	9.50 (0.374)
PHAP5-30VA2K	7.30* (0.287)

*=2.40 (0.094) SQ for caps

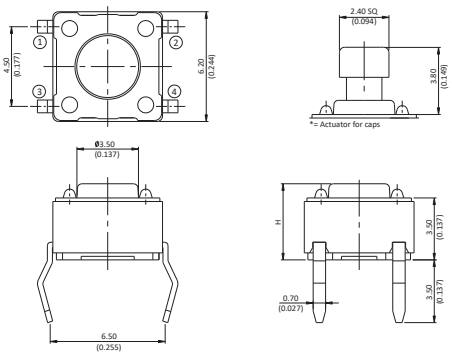

30V: 6 X 6 STANDARD - VERTICAL - SURFACE MOUNT



	Height H
PHAP5-30VA2A	4.30 (0.169)
PHAP5-30VA2B	5.00 (0.196)
PHAP5-30VA2C	7.00 (0.275)
PHAP5-30VA2D	9.50 (0.374)
PHAP5-30VA2K	7.30* (0.287)

*=2.40 (0.094) SQ for caps

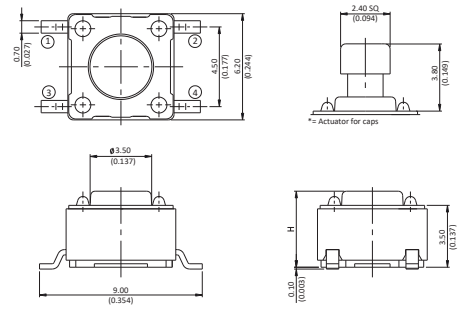

PHAP5-30 series

Tact switches • 6 x 6 mm standard package

CAPS

P/N + ☐

U5520 4 mm square cap
U5530 4.5 mm round cap

Replace "**0**" by number for cap colors :

1	Blue
2	Black
3	green
4	Grey
5	Yellow
6	Red
7	Ivory



4 MM SQUARE CAP

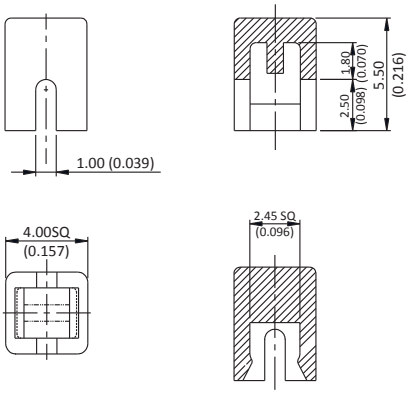

4.5 MM ROUND CAP

