3 H E / 3 U

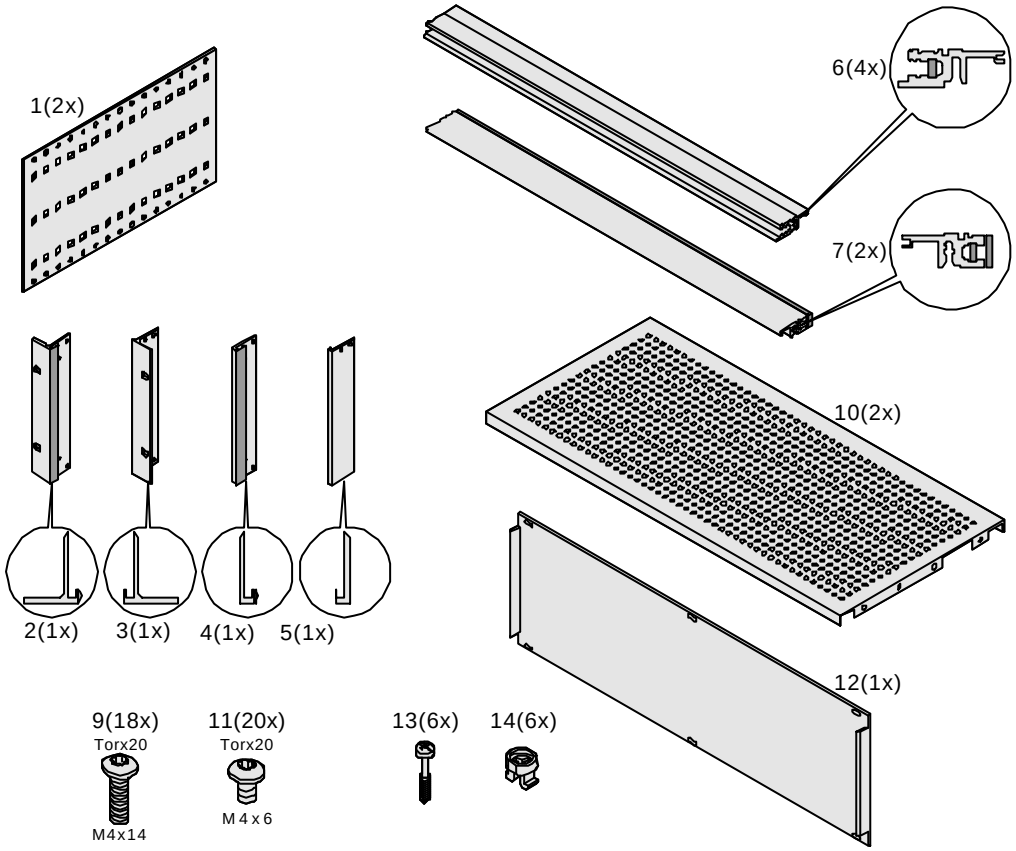

3 H E / 3 U

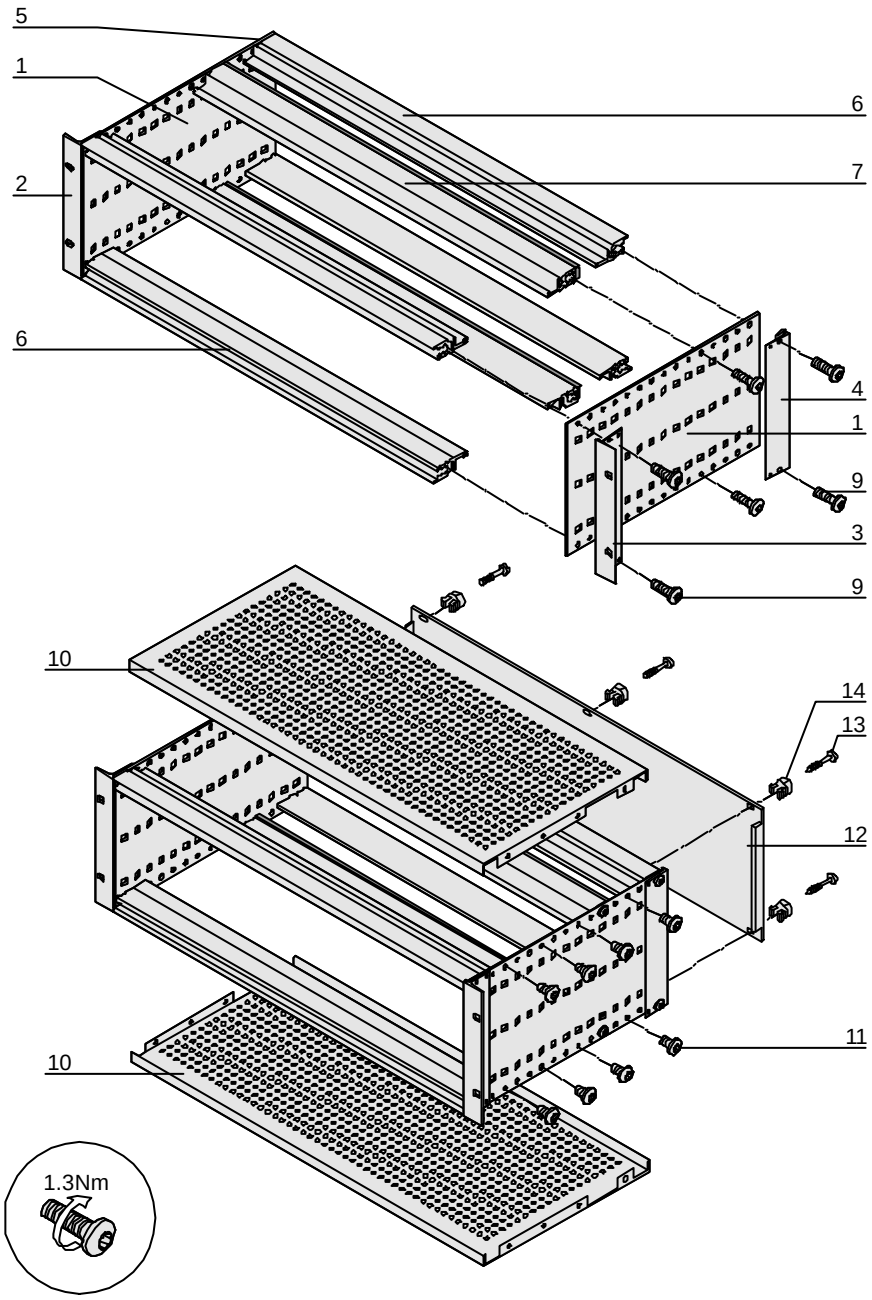

3 H E / 3 U

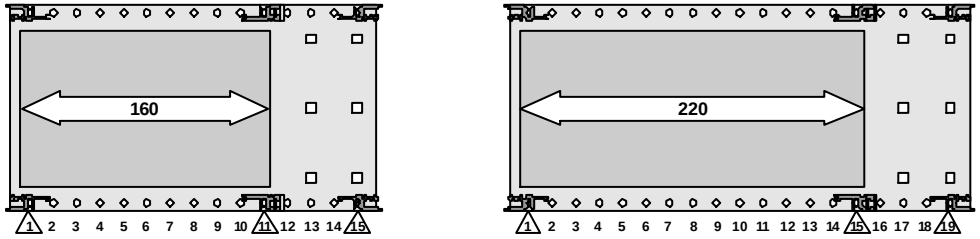

6 HE / 6 U

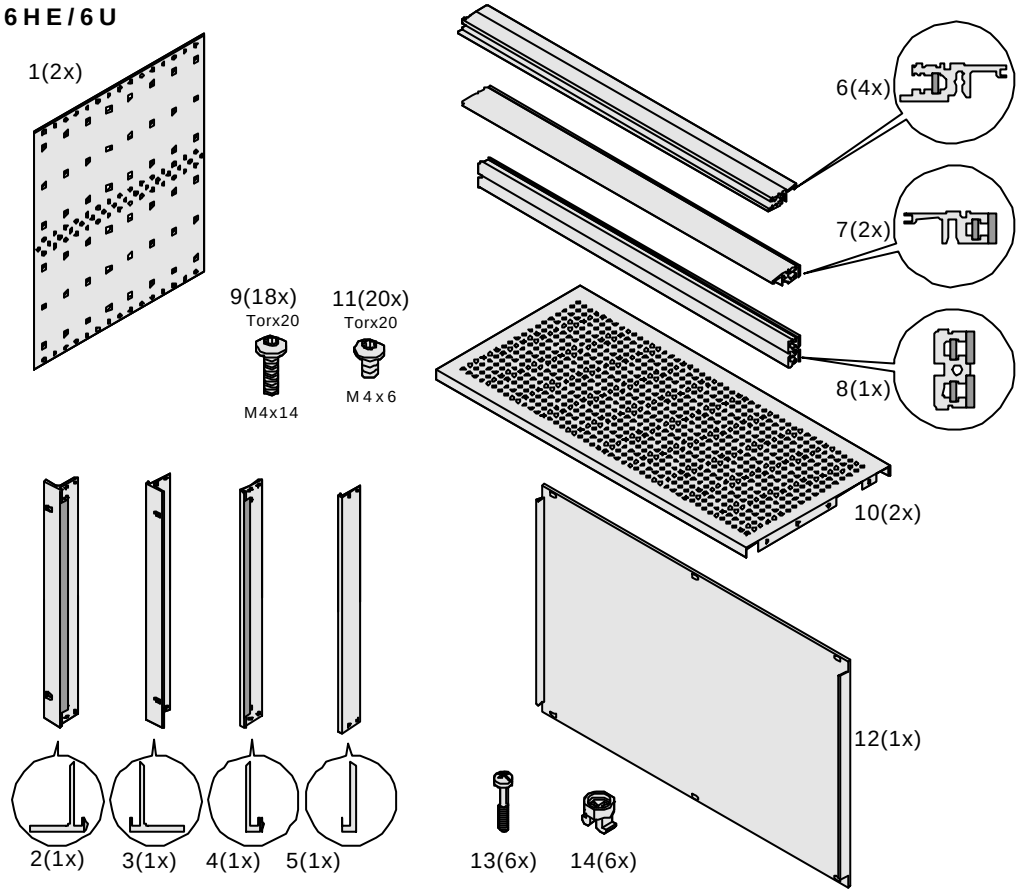

6 HE / 6 U

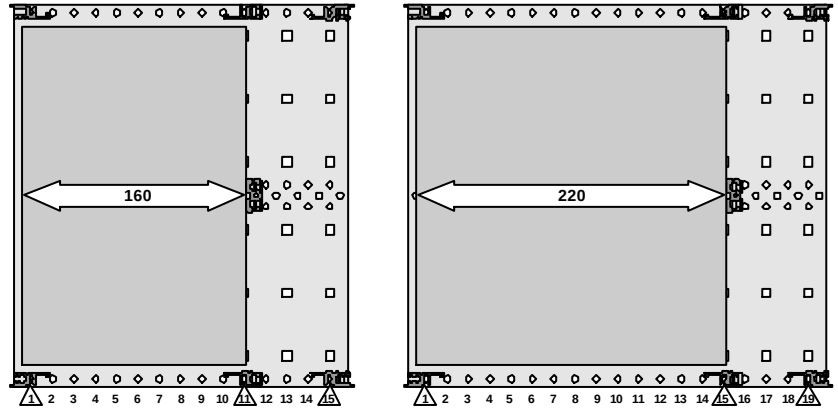

6 HE / 6 U

