

E48329

True OFF-Delay Timer

- True Off-Delay mode of operation
- Output contacts rated 10A at 120/240 VAC
- Three timing ranges in a single unit:
  10 SEC, 1 MIN, 10 MIN
  5 SEC, 0.5 MIN, 5 MIN
- Universal power operation:
  24 VAC to 240 VAC & 24 VDC
- 8-Pin or 11-Pin mounting.
- Remote reset models.
- 48mm² DIN standard housing
- Range selection is tamper-proof when panel-mounted.

TYPICAL APPLICATIONS

Whenever main power is interrupted, the 417 (adjustable from 0.1 SEC to 10 MIN), enables an emergency backup power source.

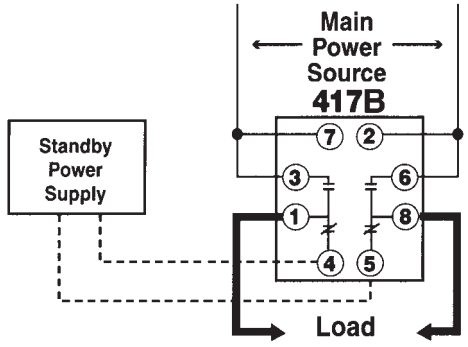

Controlled by a PLC, the 417 timing cycle can be aborted by using the remote reset terminal.

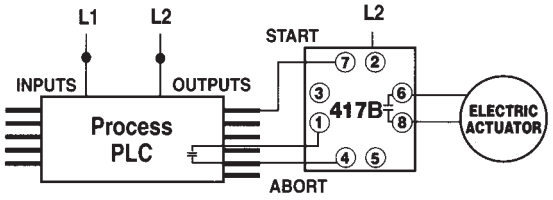

The 417B Directly Replaces 417A

The 417 True Off-Delay Timer is designed for the most rugged industrial environments. It offers exceptional electrical noise immunity, with excellent setting and repeat accuracy.

Each 417 can be powered from 24 VAC to 240 VAC and 24 VDC, greatly simplifying ordering and inventory management.

The 48mm² (1/16 DIN) housing is compact. The 417 is mounted in an 8-pin octal or 11-pin round socket. The 417 can be panel-mounted with an optional mounting clip.

A large time-setting knob is provided for easy adjustment by operator.

The range select switch is located on the side of the unit; therefore, once panel-mounted, the switch is not accessible to the operator. This tamper-proof feature prevents unauthorized or hazardous changes to the timing range.

The 417's high intensity LED turns on when power is applied to the timer and turns off during timing.

SPECIFICATIONS

MODELS	Choice of eight multi-range units. Each model has three timing ranges.
RANGE	Model 417B100 (10 SEC, 1 MIN, 10 MIN) Model 417B500 (5 SEC, 0.5 MIN, 5 MIN)
CONTACT RATING	10 AMPS (Resistive @ 250 VAC) 1/6 HP @ 120 VAC 1/3 HP @ 240 VAC
TEMPERATURE RATING	0° to 104°F (-18° to 40°C)
NOISE IMMUNITY	Showering Arc per NEMA 2-230, the 417 will withstand a voltage surge of 4500 volts for 50 µsec without damage.
MOUNTING	Plug in base available in 8-Pin Octal or 11-Pin Round Base. Options: Surface mounting socket DIN rail mounting socket Panel mounting adapter kit Plug-in socket kit
POWER REQUIREMENTS	24 to 240 VAC & 24 VDC, 50 or 60 Hz, (+10%, -20%) 24 to 240 VAC. (+20%, -20%) 24 VDC DC MAXIMUM RIPPLE AT 60 Hz -5%
LOAD RELAY	TYPE DPDT, Standard Models SPDT, Remote Reset Models LIFE 10,000,000 operations (no load 100,000 operations with 5 AMPS at 30 VDC (or less) or 5 AMPS at 250 VAC (or less)
REPEAT ACCURACY	± 5%* *Variation from average actual time.
MINIMUM SETTING	2% of range
SETTING ACCURACY	± 10%
REMOTE RESET	50 mSEC minimum (remote reset models)
POWER ON TIME	1.0 SEC minimum
INDICATOR	Power on LED
HOUSING	48mm² (1/16 DIN)
WEIGHT	5 oz. (140 g)

MODEL NUMBER

MODEL NUMBER	417B		F		
RANGE					
10 SEC, 1 MIN, 10 MIN		100			
5 SEC, 0.5 MIN, 5 MIN		500			
VOLTAGE & FREQUENCY					
24 to 240 VAC & 24 VDC			F		
ARRANGEMENT					
8-Pin Base				2	
11-Pin Base				4	
FEATURES					
Standard					X
Remote					R
Special					K

ACCESSORIES 8-PIN

8-Pin surface/DIN rail socket	000-825-85-00
Hold down for above socket (Requires two per unit)	407-025-13-00
Panel mounting bracket	405-320-02-00
Plug-in socket kit (8-pin)	319-261-45-00
8-Pin panel socket w/rear facing terminals	000-825-90-00

ACCESSORIES 11-PIN

11-Pin surface/DIN rail socket	000-825-86-00
Hold down for above socket (Requires two per unit)	407-025-13-00
Panel mounting bracket	405-320-02-00
Plug-in socket kit (11-pin)	319-260-07-00

DIMENSIONS (INCHES/MILLIMETERS)

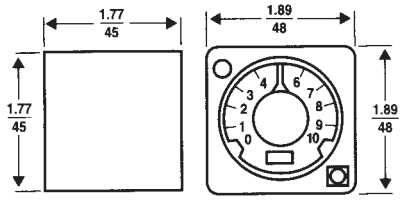

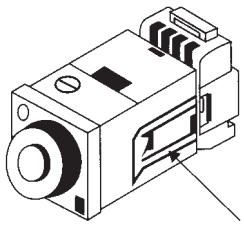

HOLD DOWN CLIP
ATC P/N 407-026-13-00

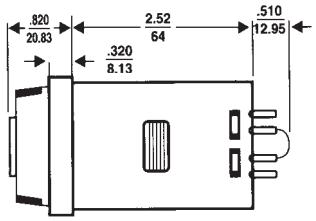

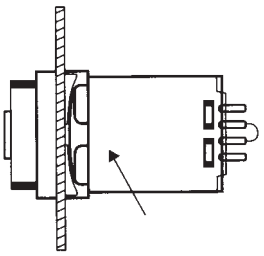

PANEL MOUNTING BRACKET
ATC P/N 406-320-02-00

PANEL MOUNTING
(UP TO 0188 THICK)

OPERATIONS

When power is applied to the timer, the relay energizes and the indicating LED turns on. Timing starts when power is removed, and the LED turns off. The output relay remains energized until the end of the cycle, or by connecting terminals 1 to 4 when using the Remote Reset Model. During time delay, power on will RESET Delay Time.

MODEL 417...F.X

Standard unit with DPDT relay contacts

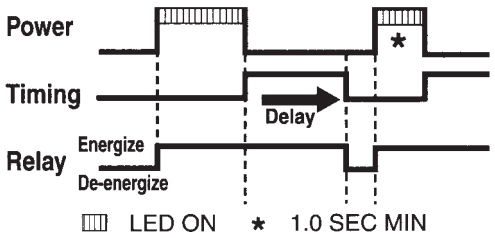

MODEL 417...F.R

Same as standard unit except with SPDT relay contacts and ability to reset from an externally located remote reset switch

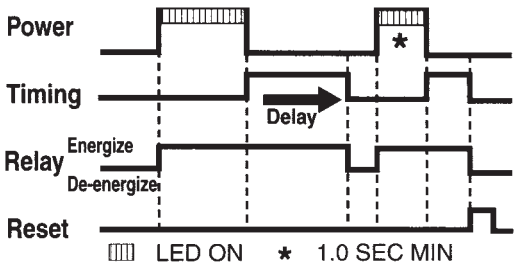

WIRING

TERMINAL WIRING

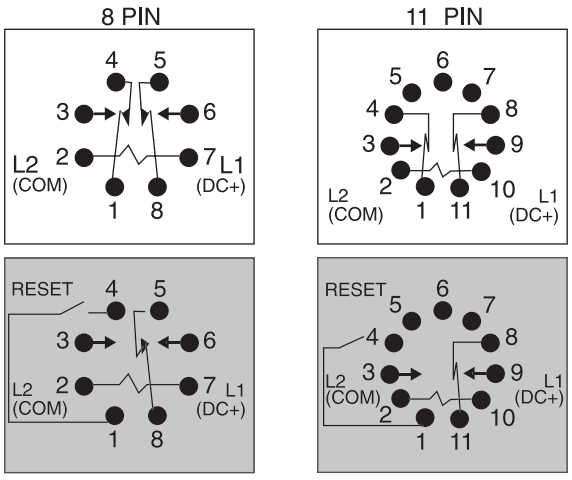

SETTING THE RANGE

Refer to the drawing. Using a small screwdriver inserted into the adjusting slot as shown (fig. 1), rotate the range switch. The selected range will appear through the window of the dial face.

