Pentair
Technical Products

Schroff®





NOVASTAR

The inNOVAtive
19" electronics cabinet



Hoffman® McLean COOLING TECHNOLOGY Birtcher® CALMARK® Schroff®

Pentair Technical Products.

Pentair Technical Products, a global business unit of Pentair Inc., is a leading supplier of product and service solutions worldwide for the housing, cladding, protection and cooling of electrical and electronic systems. With the ultimate levels of quality and performance and the most modern designs available on the market, the company's leading brands Hoffman®, Schroff®, McLean® Cooling Technology, Calmark®, Birtcher®, Aspen Motion Technologies™ and Taunus™ offer a wide spectrum of standard products and custom solutions for trade, communications, energy, electronics, industry, infrastructure and medical technology and for security and defence.

Schroff.

For more than four decades Schroff has been a world-leading developer and manufacturer of electronics packaging components and systems. Schroff supplies subracks and accessories, cases, 19" cabinets, backplanes, integrated systems and components, complete electronics systems for MicroTCA, AdvancedTCA, CompactPCI, PXI, VME, VME64x, VPX and VXS and also customised enclosure systems. Our complete solutions are based on standardised product platforms, which aid rapid, future-proof and cost-effective development. Throughout the entire lifecycle of your products, we remain at your side as your dependable partner. Worldwide.



CONTENTS

THE INNOVATIVE ELECTRONICS CABINET.
Really clever. Remarkably smart! 02-03

AREAS OF APPLICATION.
Functionality in the laboratory.Design in the studio. 04-05

THE TECHNICAL DETAILS.
Frame. Cladding components. Accessories. 06-08

SERVICE OPTIONS.
Configuration. Assembly. Modification. 09

ORDERING INFORMATION.
Product selection. Part numbers. 10-31



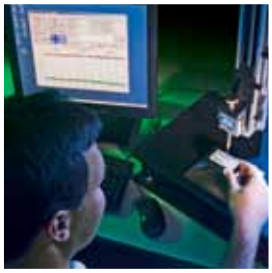



REALLY CLEVER & REMARKABLY SMART!

Functional, and aesthetic at the same time.
Securely storing your measuring instruments, accessing them directly or simply moving them from one laboratory to another - the more complex and individual your measurement, control, navigation or testing systems are, the more special are your requirements of the functionality of the appropriate electronics cabinet. If then a handsome visual design is also asked for, such as in the areas of audio, video and transmission systems, NOVASTAR is the right answer. In an exceptional way this combines functionality and aesthetics.

Slim, and really robust.
The 19" aluminium frame with inwardly mounted cladding is fascinating for its attractive design and makes a good figure even without trims, decorative frames or doors. The slender frame with a width of only 553 mm is also impressive, with a remarkable static load-carrying capacity of up to 400 kg.

Individual, yet economical.
From more than 30 standard dimensions and a wide range of accessories you can simply put your own NOVASTAR together. We can provide cut-outs and drilled holes where required. Choose your favourite colour from a range of 21, and ... from a quantity of just 1 and ready for delivery in only 10 working days. Thanks to the clever platform solution, your new NOVASTAR will also conserve your budget.

NOVASTAR: FUNCTIONALITY AND AESTHETICS REDEFINED.





INSTRUMENTATION AND CONTROL TECHNOLOGY.

- » *Measurement, control and navigation instruments*
- » *Mechanical test equipment*
- » *Process control devices*
- » *Laboratory systems*
- » *Medical technology*

INDIVIDUAL. PRACTICAL. LIGHT. CONFIGURABLE.

Clever functions, flexibility in dimension selection, and harmonious configurations – NOVASTAR scores with individually selectable parts and many practical advantages:
With or without a door, floor-standing or tabletop versions, with shelves, slide rails or support arms or with castors and handles for portable use, NOVASTAR opens up a wide scope of combination options for you.

With more than 30 different standard dimensions, the NOVASTAR aluminium cabinet platform is so flexible that it can be configured precisely for any area of application. And when your NOVASTAR needs to be moved, the aluminium frame is so light that its weight is negligible when transported.

NOVASTAR: FUNCTIONALITY WITHOUT LIMITS.








AUDIO/VIDEO/BROADCASTING.

CLEARLY CONCEIVED. ELEGANT. INSPIRING.

When the appearance of your electronics cabinet is at least as important as its function, NOVASTAR is hard to beat.
With or without cladding elements, in light grey, black grey or any of the 21 other colour variations, whether as tall as a man or under a table to save space - the NOVASTAR platform of electronics cabinets fits harmoniously and unobtrusively into any room concept.

With their straight lines, the completely closed fronts and many colour variations, NOVASTAR brings a classy accent to the studio - be it as a standalone solution or integrated into your existing equipment.

- » *Tuners, receiver, converters*
- » *Media and control units*
- » *Image and sound equipment*
- » *Conference and communications equipment*

NOVASTAR: DESIGN THAT IMPRESSES.





Made by EVS Broadcast Solutions ©





MAIN FEATURES.

- 19" frame in aluminium profile
- 2 load classes: Slim-Line & Heavy-Duty
- Width: only 553 mm
- Height: from 360 mm (6 U) to 2200 mm (47 U)
- Depth: from 500 mm to 800 mm
- Lateral T-groove

LIGHT. SLIM. ROBUST.

The base frame, made of light aluminium, is the basis of your individual NOVASTAR. And now you decide: short or tall, with standard depth or with extra space required for cabling and cooling, standalone or stacked one above another and bolted together. The NOVASTAR platform concept leaves no wishes unfulfilled. And however you configure your NOVASTAR, the internal dimensions remain consistently orientated to 19" systems. Unwanted gaps in either height or width are now a thing of the past.



NOVASTAR: A SOLUTION FOR THE HIGHEST DEMANDS.

SLIM-LINE. FOR MOBILE USE.
Because of its die-cast aluminium frame NOVASTAR is so light as to be of negligible weight when transported, but maintains stability with up to 200 kg payload. Yet it fulfils the requirements of the IEC 61587-1 testing standard.

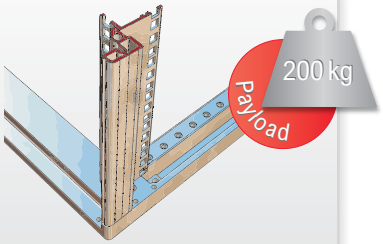

HEAVY-DUTY. A MORE ROBUST VERSION.
If you wish to load your cabinet more heavily, the Heavy-Duty version offers robustness tested to IEC 61587-1 for up to 400 kg. This is assured by the broader vertical profiles, and the clincher: the T-groove integrated into the side of the frame allows useful accessories to be perfectly fitted.

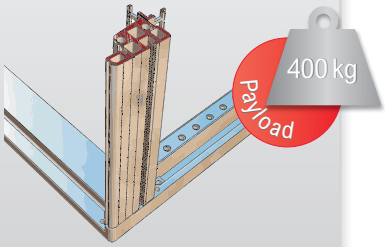

Schroff®







MAIN FEATURES.

- » *19" frame with internally positioned cladding elements*
- » *Simple to assemble without tools thanks to innovative quick-release fastening system*
- » *Door with 180° opening angle thanks to a new hinge design*
- » *Ingress protection to IP 40*

STRAIGHT-LINED. ATTRACTIVE. INNOVATIVE.

Visible uprights with fluting that gives the appearance of classical pillars, internally positioned cladding components and completely closed fronts - nothing defines a cabinet as much as its front.
If you need extra protection for the equipment housed in the cabinet, fit handsome steel or all-glass doors to your NOVASTAR. But even without doors, cover trims or decorative frames, NOVASTAR cuts a fine figure - with direct access to the components within. And if required you can combine closed and open versions with one another to great effect. After all, NOVASTAR is based on a consistent design.



NOVASTAR: PERFECTION DOWN TO THE DETAILS.

NEW DOOR HINGE CONCEPT.
Doors that open to an angle of up to 180°, doors that can be removed or the end stop changed without tools - NOVASTAR opens up new dimensions for you.

INNOVATIVE QUICK-RELEASE FASTENERS.
Now you can move, stack or take smaller cabinets with you: just use the quick-release fasteners on the side panels as carrying handles.





ACCESSORIES

- *Extensive selection of castors:*
  - *With integrated adjustable feet*
  - *Conductive*
  - *Various castor diameters*
- *Shelves & slide rails*
- *Choice of 21 colour tones*
- *Heat dissipation as required*

DEMANDING.
RICH IN IDEAS.
POINTING TO THE FUTURE.

Castors with integrated adjustable feet make NOVASTAR mobile and assure a secure position in all locations. The NOVASTAR shelves score on three points at once: they have evolved to meet all loading requirements and their perforations offer optimal cooling of the equipment in the cabinet. Thanks to easy-to-fit slide rails, the shelves can also be safely pulled out if required. Standard depth adjustment comes included.



NOVASTAR: FLEXIBILITY FOR YOUR APPLICATIONS.

HEAT DISSIPATION TO REQUIREMENTS.
Where your equipment produces higher levels of waste heat, your NOVASTAR can be cooled by means of a raised cover with or without a fan unit or via 19" fan trays.

COLOUR ACCORDING TO TASTE.
Frames, top cover and base elements are produced in black grey and cladding elements in light grey as standard. You can however match your NOVASTAR to your existing equipment and choose from 21 colours (single or combined).



SERVICE PLUS.

RELIABLE.
FAST.
FLEXIBLE.



ServicePLUS configuration: Construct your individual NOVASTAR from over 30 standard dimensions and wide range of accessories. And ... with a quantity from just 1 and ready for despatch within 10 working days!

ServicePLUS assembly: So that you can start using your new electronics cabinet as soon as possible, we can deliver your NOVASTAR fully assembled.

ServicePLUS modification: Do you have special requirements such as cut-outs, holes or special printing? Just order your NOVASTAR as you want it! 21 special colours are also in the programme.

- *Wide range of configuration options*
- *Extensive modification options*
- *21 special colours in standard programme*
- *Assembly if required*
- *Delivery within 10 working days from a quantity of 1*



SCHROFF: PERFORMANCE THAT IMPRESSES.

SERVICE MADE TO MEASURE.
ServicePLUS means the flexibility to create individual solutions. Competent, reliable, fast and on favourable terms. Because we want your electronics cabinet to fit perfectly into your surroundings.

SUSTAINABILITY.
From resource-conserving manufacture to environmentally friendly packaging for delivery, protection of the environment has the highest priority for us.

19" cabinet with glass door (smoke grey) and rear panel



07011010

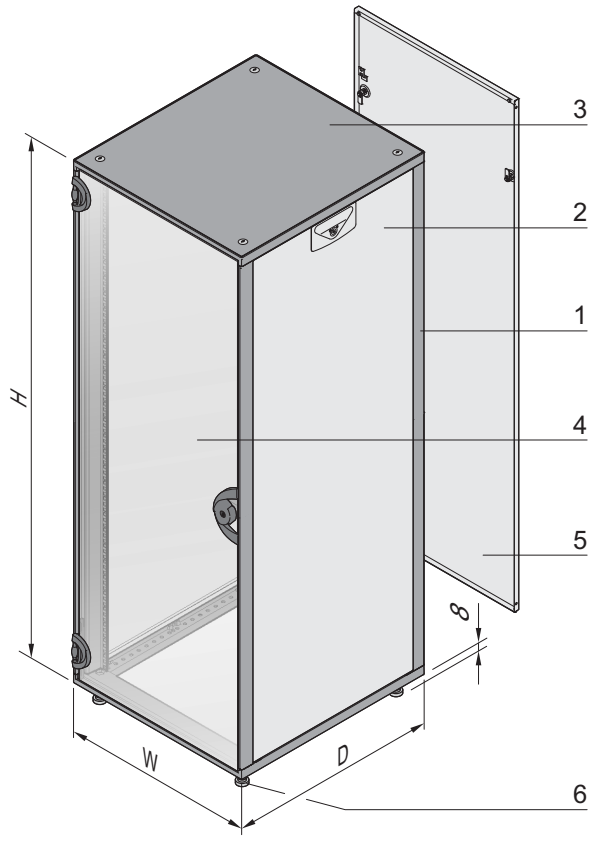

07011050

Front mounting plane recessed:
Slim-Line: front 33 mm, rear 60 mm;
Heavy-Duty: front and rear 60 mm

- All uprights (front and rear) with 19" cut-outs
- Flush cladding parts
- Ingress protection class IP 20
- 2 cabinet depths (600 mm, 800 mm), cabinet width 553 mm
- Static load-carrying capacity
  – Slim-Line 200 kg (12, 16, 20 U)
  – Heavy-Duty 400 kg (38, 43 U)
- 2 colours
  – RAL 7021 (black grey) throughout
  – Colour combination: side panels, rear panel RAL 7035 (light grey); frame, top cover RAL 7021 (black grey)

NEW

Delivery comprises (assembled)

Item	Qty	Description
1	1	Frame, uprights Al extrusion with 19" cut-outs, Al die-cast frame, RAL 7021
2	2	Side panel, St, 1 mm; light grey (RAL 7035) or black grey (RAL 7021), see Order information; twist-locking catch (Torx T30)
3	1	Flush top cover, St, 1 mm, RAL 7021
4	1	Glazed door, single pane safety glass (ESG) 6 mm, smoke grey, with DIN cylinder safety lock and 2 keys (2233x)
5	1	Rear panel, St, 1 mm, light grey (RAL 7035) or black grey (RAL 7021), see Order information
6	4	Foot
7	1	Earthing kit

Order Information

Usable height	Height H	Depth D	Width W	Colour RAL 7021	Colour RAL 7035/ RAL 7021
U	mm	mm	mm	Part no.	Part no.
Slim-Line					
12	589	600	553	15230-019	16230-019
16	767	600	553	15230-020	16230-020
20	945	600	553	15230-021	16230-021
Heavy-Duty					
38	1745	600	553	15230-022	16230-022
38	1745	800	553	15230-023	16230-023
43	1967	600	553	15230-024	16230-024
43	1967	800	553	15230-025	16230-025
Accessories					
Lifting eye for flush cover Thread M12, application and loading as per DIN 582, PU 4 pieces					27230-066

Note

- Please order base plate, base/plinth, slide rails and shelves separately, see from page 15
- Castors, see page 15
- Other accessories/components, see ServicePLUS, from page 19
- Dimension drawings see from page 30

For further information www.schroff.biz/oneclick
oneClick search code = Part no.

Part number in bold face type: ready for despatch within 2 working days
Part number in normal type: ready for despatch within 10 working days

19" cabinet, door and rear panel combination freely selectable



07011013

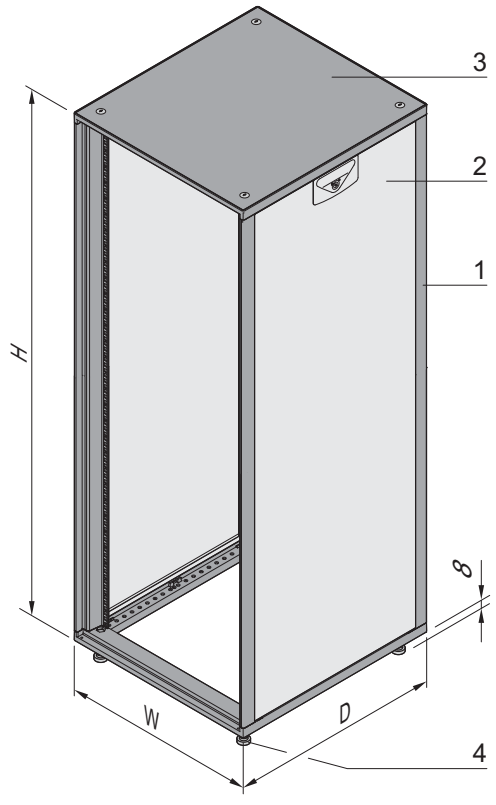

07011051

Front mounting plane recessed:
Slim-Line: front 33 mm, rear 60 mm;
Heavy-Duty: front and rear 60 mm

- All uprights (front and rear) with 19" cut-outs
- Flush cladding parts
- Ingress protection class IP 20
- 3 cabinet depths (500, 600, 800 mm), cabinet width 553 mm
- Static load-carrying capacity
  - Slim-Line 200 kg (9 U to 25 U)
  - Heavy-Duty 400 kg (34 U to 47 U)
- 2 colours
  - RAL 7021 (black grey) throughout
  - Colour combination: side panels RAL 7035 (light grey); frame, top cover RAL 7021 (black grey)

NEW

Delivery comprises (assembled)

Item	Qty	Description
1	1	Frame, uprights Al extrusion with 19" cut-outs, Al die-cast frame, RAL 7021
2	2	Side panel, St, 1 mm; light grey (RAL 7035) or black grey (RAL 7021), see Order information; twist-locking catch (Torx T30)
3	1	Flush top cover, St, 1 mm, RAL 7021
4	4	Foot
5	1	Earthing kit

Order Information

Usable height	Height H	Depth D	Width W	Colour RAL 7021	Colour RAL 7035/ RAL 7021
U	mm	mm	mm	Part no.	Part no.
Slim-Line					
9	456	600	553	15230-001	16230-001
12	589	500	553	15230-002	16230-002
12	589	600	553	15230-003	16230-003
16	767	500	553	15230-004	16230-004
16	767	600	553	15230-005	16230-005
20	945	500	553	15230-006	16230-006
20	945	600	553	15230-007	16230-007
20	945	800	553	15230-008	16230-008
25	1167	600	553	15230-009	16230-009
25	1167	800	553	15230-010	16230-010
Heavy-Duty					
34	1567	600	553	15230-011	16230-011
34	1567	800	553	15230-012	16230-012
38	1745	600	553	15230-013	16230-013
38	1745	800	553	15230-014	16230-014
43	1967	600	553	15230-015	16230-015
43	1967	800	553	15230-016	16230-016
47	2145	600	553	15230-017	16230-017
47	2145	800	553	15230-018	16230-018
Accessories					
Lifting eye for flush cover Thread M12, application and loading as per DIN 582, PU 4 pieces					27230-066

- Please order doors, rear panel, base plate, base/plinth, slide rails and shelves separately, see from page 12
- Castors, see page 15
- Other accessories/components, see ServicePLUS, from page 19
- Dimension drawings see from page 30

Glass door (smoke grey)

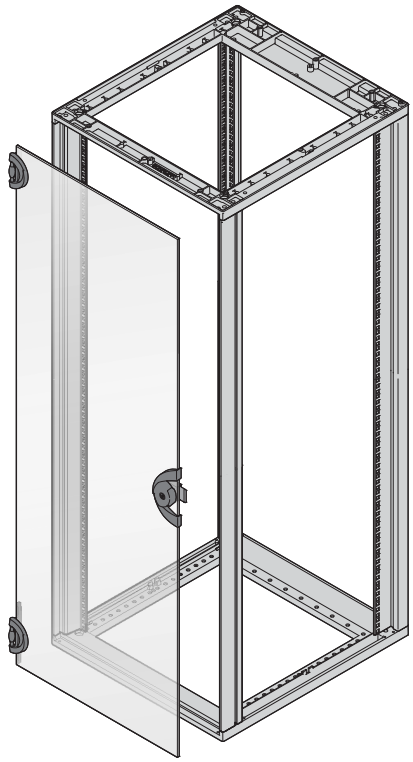

07011059

- Can be assembled at front and rear
- Opening angle 180°

NEW

Delivery comprises

Item	Qty	Description
1	1	Glazed door, single pane safety glass (ESG) 6 mm, smoke grey; safety lock with DIN cylinder and 2 keys (2233x); hinges, plastic, black
2	1	Assembly kit

Order Information

For cabinet height U	Height mm	Part no.
9	422	27230-002
12	555	27230-003
16	733	27230-004
20	911	27230-005
25	1133	27230-006
34	1534	27230-007
38	1711	27230-008
43	1933	27230-009
47	2111	27230-010

Steel door

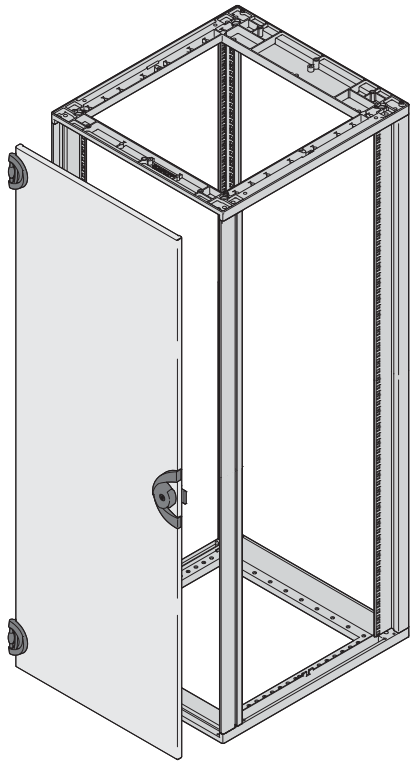

07011060

- Can be assembled at front and rear
- Opening angle 180°
- Colour black grey (RAL 7021) or light grey (RAL 7035)

NEW

Delivery comprises

Item	Qty	Description
1	1	Steel door, St, 1.5 mm, safety lock with DIN cylinder and 2 keys (2233x); hinges, plastic, black
2	1	Assembly kit and earthing kit

Order Information

For cabinet height U	Height mm	Colour RAL 7021 Part no.	Colour RAL 7035 Part no.
9	422	25230-021	26230-021
12	555	25230-022	26230-022
16	733	25230-023	26230-023
20	911	25230-024	26230-024
25	1133	25230-025	26230-025
34	1534	25230-026	26230-026
38	1711	25230-027	26230-027
43	1933	25230-028	26230-028
47	2111	25230-029	26230-029

For further information www.schroff.biz/oneclick
oneClick search code = Part no.

Part number in bold face type: ready for despatch within 2 working days
Part number in normal type: ready for despatch within 10 working days

Cable ducting combination for steel door

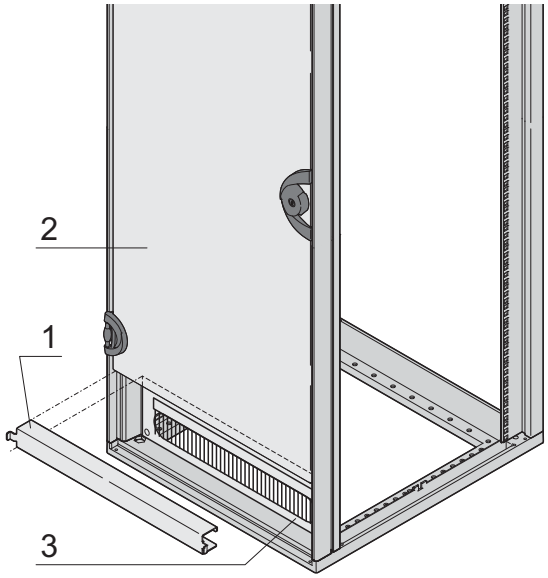

07011061

- For a cable ducting combination, a steel door, a door hinge bracket and a frame for cable ducting are required
- Cable ducting can be at top or bottom
- Frame with brush strip for cable ducting is either 3 U or 4 U depending on cabinet/door height

NEW

Delivery comprises

Item	Qty	Description
1	1	Door hinge bracket, St, 2 mm, RAL 7021; requires 1 U assembly space, mounts above or below steel door
2	1	Steel door, St, 1.5 mm, lock (2233x) with 2 keys, opening angle 180°, GND/earthing
3	1	Frame for cable ducting, St, 2.5 mm, with black brush strip, 3 U (for cabinet heights 16, 20, 38, 47 U) 4 U (for cabinet heights 25, 34, 43 U)

Order Information

	Steel door		Door hinge bracket for doors			Cable ducting frame	
	RAL 7035	RAL 7021	Slim-Line front 33 mm	Slim-Line rear 60 mm	Heavy-Duty front/rear 60 mm	RAL 7035	RAL 7021
	St, 1.5 mm, lock (2233x) with 2 keys, opening angle 180°, incl. GND/ earthing		Door hinge bracket, St, 2 mm, RAL 7021; mounts above or below the door; requires 1 U assembly space			St, 2.5 mm, with black brush strip 1) Height 3 U 2) Height 4 U	
Cabinet dimensions Height (U)							
16	26230-022	25230-022	27230-060	27230-061	27230-061	1) 20118-391	1) 20118-796
20	26230-023	25230-023	27230-060	27230-061	27230-061	1) 20118-391	1) 20118-796
25	26230-024	25230-024	27230-060	27230-061	27230-061	2) 20118-390	2) 20118-797
34	26230-030	25230-030	27230-060	27230-061	27230-061	2) 20118-390	2) 20118-797
38	26230-026	25230-026	27230-060	27230-061	27230-061	1) 20118-391	1) 20118-796
43	26230-027	25230-027	27230-060	27230-061	27230-061	2) 20118-390	2) 20118-797
47	26230-028	25230-028	27230-060	27230-061	27230-061	1) 20118-391	1) 20118-796

For further information www.schroff.biz/oneclick
oneClick search code = Part no.

Rear panel

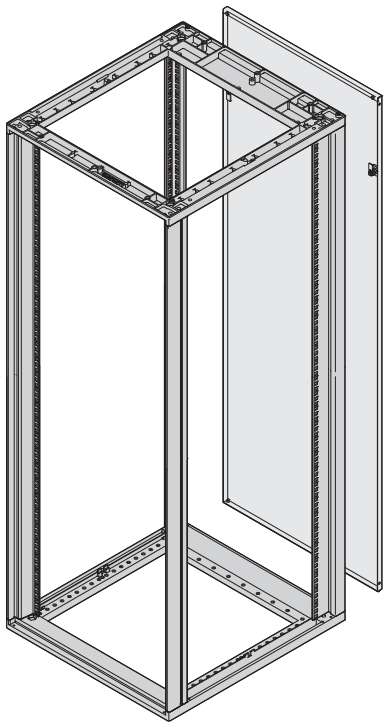

07011057

- Twist-locking catch (Torx T30, with 1/4 turn)
- Rear panel: colour black grey (RAL 7021) or light grey (RAL 7035)

NEW

Delivery comprises

Item	Qty	Description
1	1	Rear panel, St, 1 mm, twist-locking catch (Torx T30, with 1/4 turn)
2	1	Assembly kit

Order Information

For cabinet height	Height	Colour RAL 7021	Colour RAL 7035
U	mm	Part no.	Part no.
9	422	25230-371	26230-371
12	555	25230-372	26230-372
16	733	25230-373	26230-373
20	911	25230-374	26230-374
25	1133	25230-375	26230-375
34	1534	25230-376	26230-376
38	1711	25230-377	26230-377
43	1933	25230-378	26230-378
47	2111	25230-379	26230-379

Rear panel with cable ducting frame

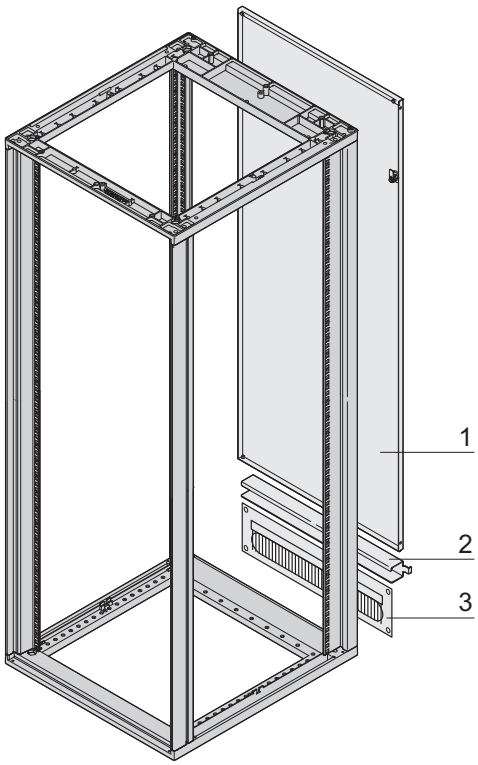

07011058

- Twist-locking catch (Torx T30, with 1/4 turn)
- Rear panel: colour black grey (RAL 7021) or light grey (RAL 7035)
- Cable ducting frame 3 or 4 U

NEW

Delivery comprises

Item	Qty	Description
1	1	Rear panel, St, 1 mm, colour see Order information; twist-locking catch (Torx T30, with 1/4 turn)
2	1	Door hinge bracket, St, 2 mm, colour see Order information
3	1	Frame for cable ducting, St, 1.5 mm, colour see Order information; brush strip; 3 U frame for cable ducting for cabinet heights 16, 20, 38, 47 U; 4 U frame for cable ducting for cabinet heights 25, 34, 43 U
4	1	Assembly kit and earthing kit

Order Information

For cabinet height	Height	For cabinet width	Colour RAL 7021	Colour RAL 7035
U	mm	mm	Part no.	Part no.
16	733	553	25230-430	26230-430
20	911	553	25230-434	26230-434
25	1133	553	25230-439	26230-439
34	1534	553	25230-448	26230-448
38	1711	553	25230-452	26230-452
43	1933	553	25230-457	26230-457
47	2111	553	25230-461	26230-461

Part number in bold face type: ready for despatch within 2 working days
Part number in normal type: ready for despatch within 10 working days

Base (rear open)

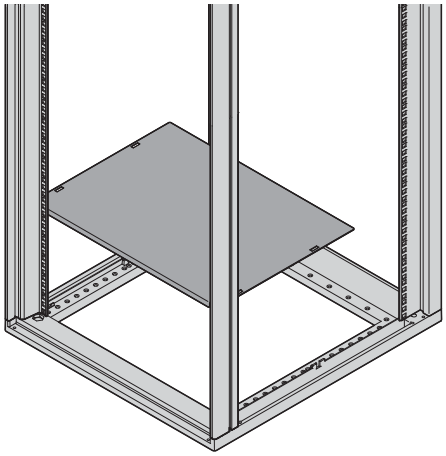

07011073

- Base is open at rear for cable ducting; opening can be closed with a cover plate or brush strip

NEW

Delivery comprises

Item	Qty	Description
1	1	Base plate, St, 1.5 mm, RAL 7021; cable through-ducting opening, width 440 mm, depth 70 mm
2	1	Assembly kit

Order Information

For cabinet width mm	For cabinet depth mm	Part no.
553	500	27230-091
553	600	27230-092
553	800	27230-093
Accessories		
Brush strip Nylon, black, 440 mm x 98 mm, PU 1 piece		27230-079
Cover plate for base St, 1.5 mm, 485 mm x 92 mm, RAL 7021, PU 1 piece		27230-114

For further information www.schroff.biz/oneclick
oneClick search code = Part no.

Castors

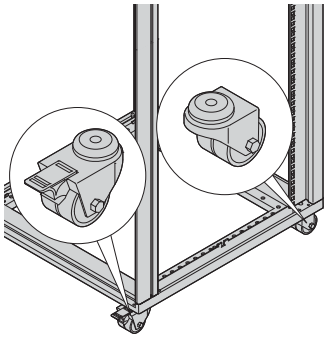

07011065

Load-carrying capacity 200 kg

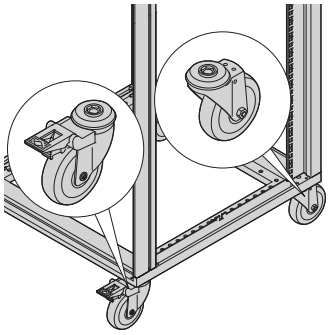

07011066

Load-carrying capacity 300 kg, conductive,
ESD resistance < 10 kΩ

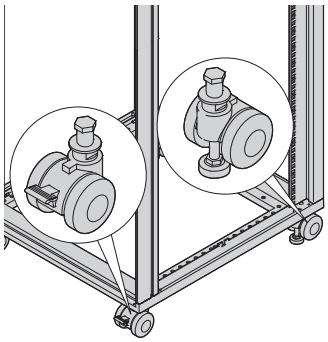

07011067

Load-carrying capacity 400 kg, with adjustable feet

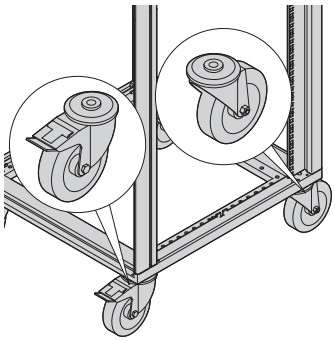

07011068

Load-carrying capacity 400 kg

- Castors are fitted to the frame
- Static load-carrying capacity 200 kg, 300 kg or 400 kg according to version
- Height dependent on version 73 mm, 80 mm, 131 mm or 155 mm
- 2 castors without jacking foot, 2 castors with jacking foot

NEW

Delivery comprises

Item	Qty	Description
1	2	Locking castor, PA/St
2	2	Non-locking castor, PA/St
3	1	Assembly kit

Order Information

Description	Load-carrying capacity: kg	Height H mm	Castor diameter mm	Part no.
Castors	200	73	Ø 50	27230-067
Castors conductive, ESD in accordance with EN 12528	300	131	Ø 100	27230-110
Castors with adjustable feet	400	80	Ø 60	27230-068
Castors	400	155	Ø 125	27230-069

For further information www.schroff.biz/oneclick
oneClick search code = Part no.

Base/plinth with cable ducting

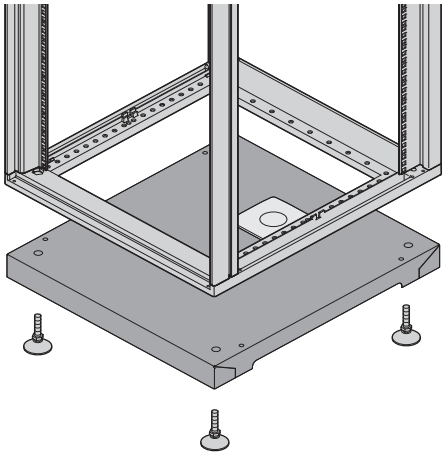

07011075

- Static load-carrying capacity 400 kg
- Height adjustable in range 57 .... 67 mm
- Cable ducting (110 x 76 mm) with cover

NEW

Delivery comprises (assembled)

Item	Qty	Description
1	1	Base/plinth, St, 1.5 mm, height 55 mm, RAL 7021; cable ducting 110 mm x 76 mm, with plastic trim
2	4	Adjustable foot
3	1	Assembly kit and earthing kit

Order Information

For cabinet width mm	For cabinet depth mm	Part no.
553	500	27230-070
553	600	27230-071
553	800	27230-072
Accessories		
Brush strip Nylon, black, 110 mm x 76 mm; to cover cable through-ducting opening , 1 piece		27230-111

For further information www.schroff.biz/oneclick
oneClick search code = Part no.

Slide rail

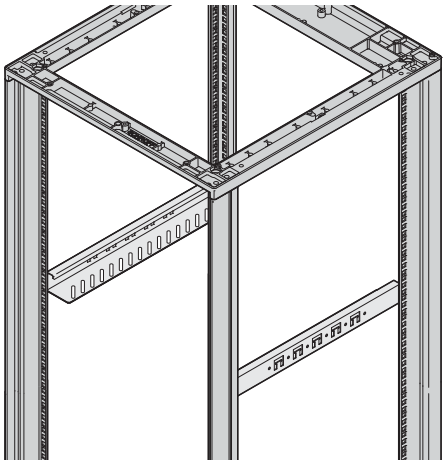

07011078

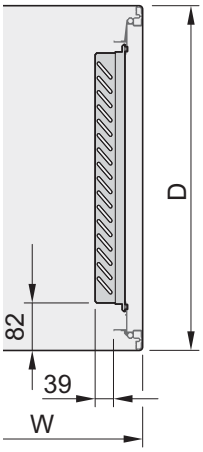

07011104

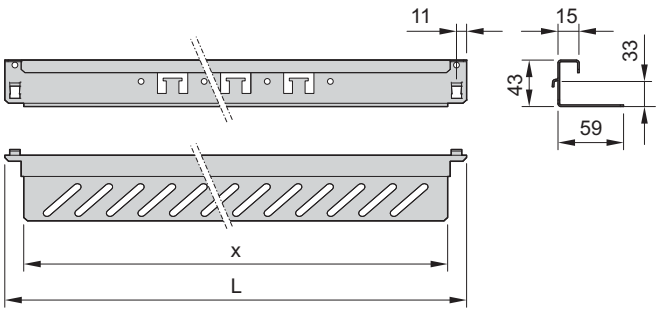

07011103

- For mounting on the vertical cabinet uprights
- Adjustable in 1 U increments
- Static load-carrying capacity 25 kg per pair

NEW

Delivery comprises

Item	Qty	Description
1	2	Slide rail, St, 1,5 mm, finish AlZn
2	1	Assembly kit

Order Information

For cabinet depth D mm	L mm	x mm	Part no.
500	366	340	27230-102
600	466	440	27230-103
800	666	640	27230-104

For further information www.schroff.biz/oneclick
oneClick search code = Part no.

Part number in bold face type: ready for despatch within 2 working days
Part number in normal type: ready for despatch within 10 working days

Short slide rail

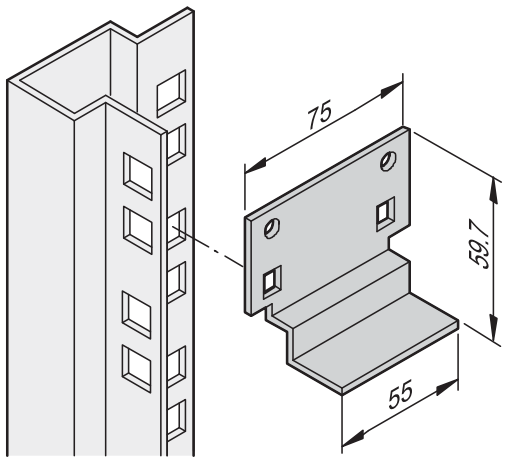

SC96XXXX

- For mounting on the vertical cabinet uprights
- Can be hung at 1 U increments
- Static load-carrying capacity 15 kg max per pair

NEW

Delivery comprises

Item	Qty	Description
1	2 / 10	Short slide rail, St, 1.5 mm, finish AlZn
2	1	Assembly kit

Order Information

Description	Qty/PU	Part no.
Short slide rail	2	27230-125
Short slide rail	10	27230-126

For further information www.schroff.biz/oneclick
oneClick search code = Part no.

Shelf, stationary

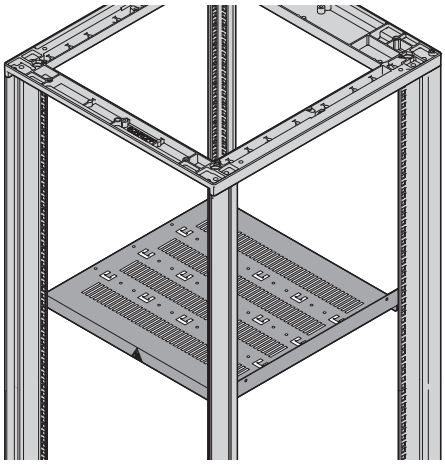

07011077

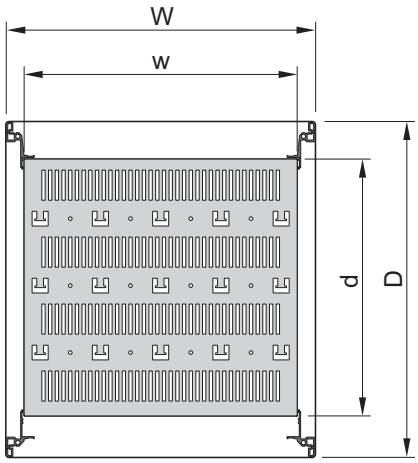

07011105

W = 553 mm

- Static load-carrying capacity 75 kg
- Mounting height 1 U, for fitting on the vertical cabinet uprights
- Hammer head perforation for fixing cables using cable ties or Velcro-type tape

NEW

Delivery comprises

Item	Qty	Description
1	1	Shelf with perforation, St, 1.5 mm, RAL 7021
2	1	Assembly kit

Order Information

For cabinet depth D mm	Usable surface w x d mm	Part no.
500	488 x 350	27230-051
600	488 x 450	27230-052
800	488 x 650	27230-053
Accessories		
Cable tie 92 mm x 2.5 mm, PU 25 pieces		20118-351
Cable tie 186 mm x 5 mm, PU 25 pieces		20118-352
Cable tie 360 mm x 5 mm, PU 25 pieces		20118-353
Velcro strip Polyethylen/Polyamide, black, length 300 mm, PU 10 pieces		20118-624

For further information www.schroff.biz/oneclick
oneClick search code = Part no.

Shelf, telescopic, 70 kg

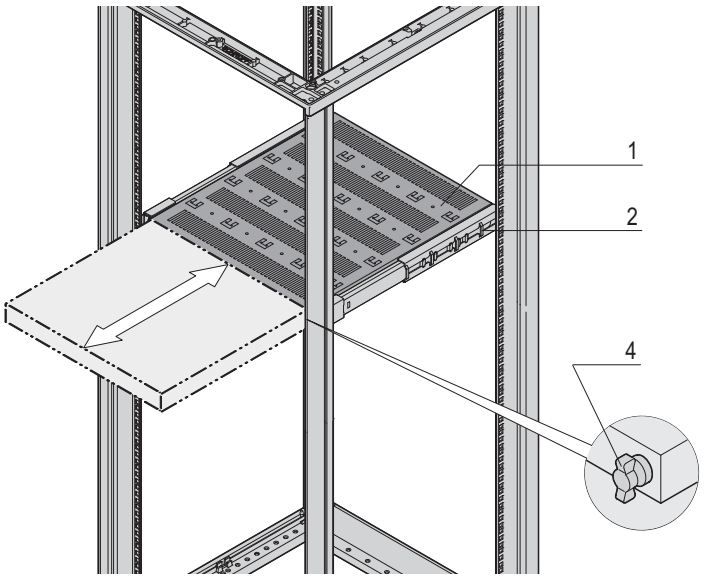

07011089

- Static load-carrying capacity at full extension 70 kg
- Mounting height 2 U, for fitting to the four vertical uprights
- Incl. telescopic slides
- Locking possible with T-bar lock
- Hammer head perforation for fixing cables using cable ties or Velcro-type tape
- 2 versions
  – Full depth
  – Depth shortened by 100 mm for rear cable ducting

Delivery comprises

Item	Qty	Description
1	1	Shelf with perforation, St, 1.5 mm, RAL 7021
2	2	Telescopic slide
3	1	Assembly kit

Full depth

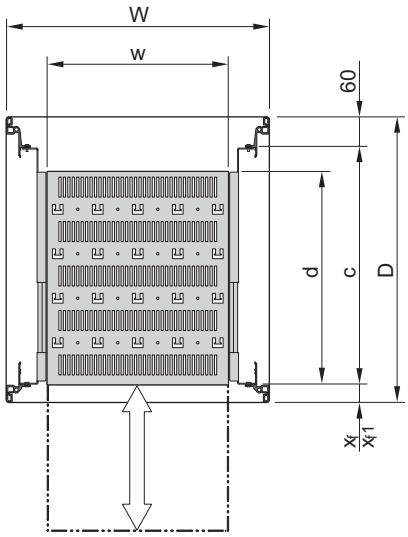

07011101

Order Information

Full depth

Cabinet dimensions W x D	Usable surface w x d	x_f	x_f1	c	Full depth
mm	mm	mm	mm	mm	Part no.
553 x 500	405 x 382	33	60	407	21130-357
553 x 600	405 x 482	33	60	507	21130-353
553 x 800	405 x 682	33	60	687	21130-355
Item 4 T-bar lock for 1 pull-out shelf (can be mounted right or left), 1 piece					23130-092
GND/earthing for pull-out shelf PU 1 piece					21120-189

Recessed depth

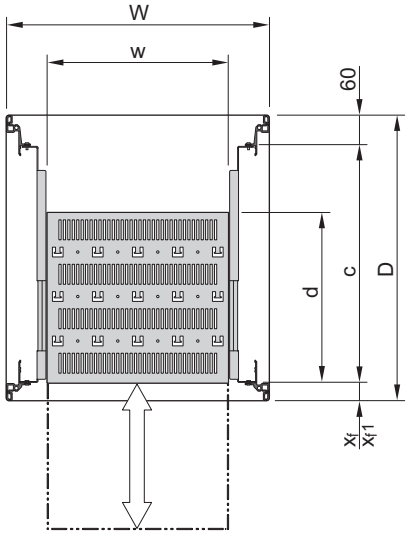

07011102

Order Information

Shortened by 100 mm

Cabinet dimensions W x D	Usable surface w x d	x_f	x_f1	c	Shortened by 100 mm
mm	mm	mm	mm	mm	Part no.
553 x 500	405 x 282	33	60	407	21130-358
553 x 600	405 x 382	33	60	507	21130-352
553 x 800	405 x 582	33	60	687	21130-354
Item 4 T-bar lock for 1 pull-out shelf (can be mounted right or left), 1 piece					23130-092
GND/earthing for pull-out shelf PU 1 piece					21120-189

For further information www.schroff.biz/oneclick
oneClick search code = Part no.

c = pitch of 19" profiles; x_f, = Slim-Line assembly dimension;
x_f1 = Heavy-Duty assembly dimension

Part number in bold face type: ready for despatch within 2 working days
Part number in normal type: ready for despatch within 10 working days

ServicePLUS: configuration and assembly

- Dimensions:
  - Height: 6 ... 47 U (357 ... 2145 mm)
  - Width: 553 mm
  - Depth: 500, 600, 800 mm
- 2 frame versions:
  - Slim-Line, static load-carrying capacity 200 kg, height 6 ... 47 U
  - Heavy-Duty, static load-carrying capacity 400 kg, height 16 ... 47 U
- Configure your cabinet from individual parts
  (to have them assembled please add the suffix **/05** to each part number)
- After you have selected your cabinet dimensions, the row number (first column of the configuration tables) guides you through all the pages of the configurations possible for these dimensions (see example below)
- The configured cabinet is assembled and is ready for dispatch within 10 working days

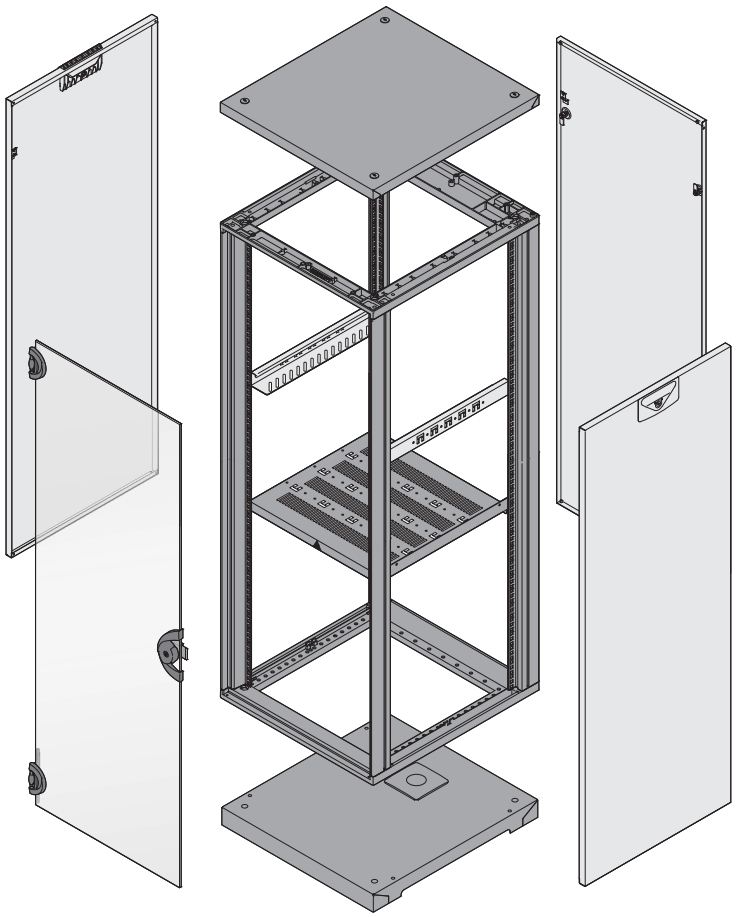

07011052

	Page
Frames, castors, adjustable feet	20
Side-to-side mounting kits, stacking kits, side panels	21
Glass doors, steel doors	22
Cable ducting combination for steel doors	23
Rear panels	24
Top covers	25
Fan top covers, lifting eyes	26
Bases, plinths, stationary shelves	27
Shelves	28
Slide rails, cable ties, Velcro-type tapes	29
Dimension drawings Slim-Line frames	30
Dimension drawings Heavy-Duty frames	31

Configuration example, assembled (here: row no. 11)

Qty	Description	Order no.
1	Frame, Slim-Line, usable height 20 U, height 945 mm, width 553 mm, depth 500 mm, 1 piece	28230-015/05
1	Side panel, Slim-Line, height 20 U, depth 500 mm, RAL 7035, PU 2 pieces	26230-074/05
1	Glass door (smoke grey), height 20 U, opening angle 180°, width 553 mm, 1 piece	27230-005/05
1	Rear panel, height 20 U, width 553 mm, RAL 7035, PU 1 piece	26230-374/05
1	Top cover, raised, width 553 mm, depth 500 mm, RAL 7021, 1 piece	25230-010/05
..	.....	.....

Frames, castors, adjustable feet

Order Information

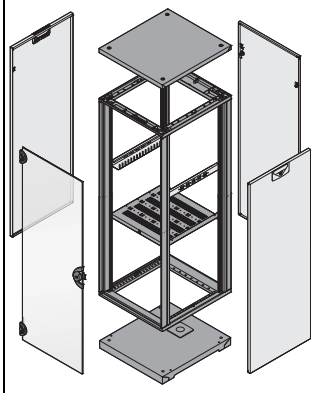

	Cabinet dimensions				Frame		Castors				Adjustable foot
					Slim-Line 200 kg	Heavy-Duty 400 kg	Load-carrying capacity 200 kg	Load-carrying capacity 300 kg, conductive	Load-carrying capacity 400 kg, Ø 60 mm	Load-carrying capacity 400 kg, Ø 125 mm	
	Height		Width	Depth							
No.	U	mm	mm	mm							
					 07011053	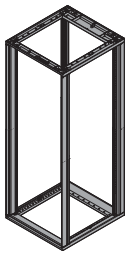 07011054	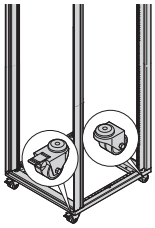 07011065	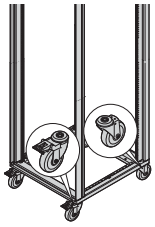 07011066	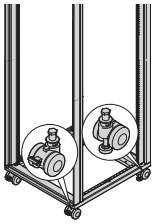 07011067	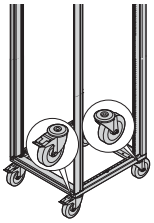 07011068	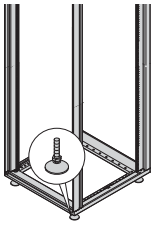 07011069
					Static load-carrying capacity: 200 kg, Al extrusion, RAL 7021, incl. GND/earthing; 19" plane 33 mm at front, 60 mm at rear; please order castors or adjustable feet separately	Static load-carrying capacity: 400 kg, Al extrusion, RAL 7021, incl. GND/earthing; 19" plane 60 mm at front, 60 mm at rear; please order castors or adjustable feet separately	Static load-carrying capacity 200 kg, height 73 mm, Ø 50 mm, 2 castors without jacking foot, 2 castors with jacking foot	Static load-carrying capacity 300 kg, height 131 mm, Ø 100 mm, 2 castors without jacking foot, 2 castors with jackingfoot; EN 12528 (resistance < 10 kΩ)	Static load-carrying capacity 400 kg, height 80 mm, Ø 60 mm, 2 castors without jacking foot, 2 castors with jacking foot, incl. 4 adjustable feet	Static load-carrying capacity 400 kg, height 155 mm, Ø 125 mm, 2 castors without jacking foot, 2 castors with jacking foot	Static load-carrying capacity 400 kg, St, polyamide, black
					1 piece assembled	1 piece assembled	PU 1 kit assembled	PU 1 kit assembled	PU 1 kit assembled	PU 1 kit assembled	assembled
1	6	357	553	500	28230-001	–	27230-067	27230-110	27230-068	27230-069	27230-100
2	6	357	553	600	28230-060						
3	9	456	553	500	28230-004	–	27230-067	27230-110	27230-068	27230-069	27230-100
4	9	456	553	600	28230-063						
5	12	589	553	500	28230-007	–	27230-067	27230-110	27230-068	27230-069	27230-100
6	12	589	553	600	28230-066						
7	12	589	553	800	28230-126						
8	16	767	553	500	28230-011	28230-310	27230-067	27230-110	27230-068	27230-069	27230-100
9	16	767	553	600	28230-070	28230-370					
10	16	767	553	800	28230-130	28230-430					
11	20	945	553	500	28230-015	28230-314	27230-067	27230-110	27230-068	27230-069	27230-100
12	20	945	553	600	28230-074	28230-374					
13	20	945	553	800	28230-134	28230-434					
14	25	1167	553	500	28230-020	28230-319	27230-067	27230-110	27230-068	27230-069	27230-100
15	25	1167	553	600	28230-079	28230-379					
16	25	1167	553	800	28230-139	28230-439					
17	34	1567	553	500	28230-029	28230-328	27230-067	27230-110	27230-068	27230-069	27230-100
18	34	1567	553	600	28230-088	28230-388					
19	34	1567	553	800	28230-148	28230-448					
20	38	1745	553	500	28230-033	28230-332	27230-067	27230-110	27230-068	27230-069	27230-100
21	38	1745	553	600	28230-092	28230-392					
22	38	1745	553	800	28230-152	28230-452					
23	43	1967	553	500	28230-048	28230-337	27230-067	27230-110	27230-068	27230-069	27230-100
24	43	1967	553	600	28230-097	28230-397					
25	43	1967	553	800	28230-157	28230-457					
26	47	2145	553	500	28230-042	28230-341	27230-067	27230-110	27230-068	27230-069	27230-100
27	47	2145	553	600	28230-101	28230-401					
28	47	2145	553	800	28230-162	28230-461					

Frame dimensions, see page 30

If you would like to have the individual components of your configured ServicePLUS cabinet fitted, please add the suffix **/05** to the order number

Further information **www.schroff.biz/oneclick** oneClick code = order number

Part number in bold face type: ready for despatch within 2 working days
Part number in normal type: ready for despatch within 10 working days

Side-to-side mounting kits, stacking kits, side panels

Order Information

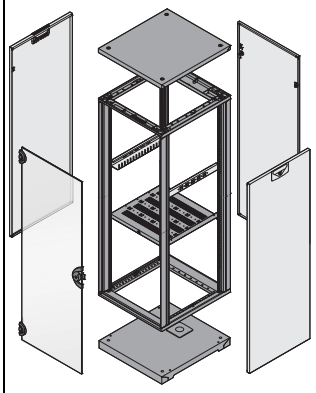

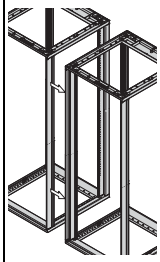
07011080

Gasketing, foam adhesive tape: PU foam anthracite; for joining two adjacent cabinets

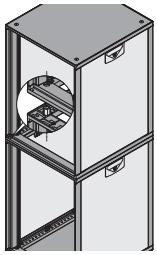
07011070

for joining two cabinets positioned one above the other

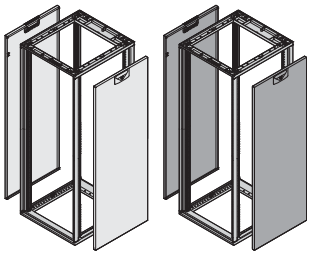
07011055 07011084

St, 1 mm, with quarter-turn fastener; incl. GND/earthing

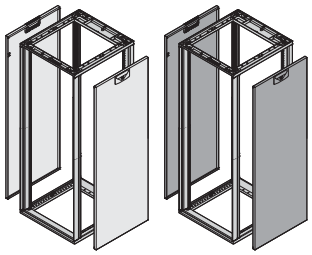
07011056 07011085

St, 1 mm, with quarter-turn fastener; incl. GND/earthing

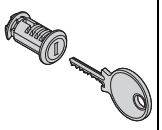
07011108

Side panel lock (2233x) with key

	Cabinet dimensions				Side-by-side mounting kit	Stacking kit	Side panel				Side panel lock
							Slim-Line		Heavy-Duty		
	Height		Width	Depth			RAL 7035	RAL 7021	RAL 7035	RAL 7021	
No.	U	mm	mm	mm	PU 1 kit enclosed loose	PU 1 kit enclosed loose	PU 2 pieces assembled	PU 2 pieces assembled	PU 2 pieces assembled	PU 2 pieces assembled	PU 1 kit assembled
1	6	357	553	500	20230-409	27230-112	26230-070	25230-070	–	–	27230-115
2	6	357	553	600			26230-120	25230-120			
3	9	456	553	500	20230-409	27230-112	26230-071	25230-071	–	–	27230-115
4	9	456	553	600			26230-121	25230-121			
5	12	589	553	500	20230-409	27230-112	26230-072	25230-072	–	–	27230-115
6	12	589	553	600			26230-122	25230-122			
7	12	589	553	800			26230-172	25230-172			
8	16	767	553	500	20230-409	27230-112	26230-073	25230-073	26230-223	25230-223	27230-115
9	16	767	553	600			26230-123	25230-123	26230-273	25230-273	
10	16	767	553	800			26230-173	25230-173	26230-323	25230-323	
11	20	945	553	500	20230-409	27230-112	26230-074	25230-074	26230-224	25230-224	27230-115
12	20	945	553	600			26230-124	25230-124	26230-274	25230-274	
13	20	945	553	800			26230-174	25230-174	26230-324	25230-324	
14	25	1167	553	500	20230-409	27230-112	26230-075	25230-075	26230-225	25230-225	27230-115
15	25	1167	553	600			26230-125	25230-125	26230-275	25230-275	
16	25	1167	553	800			26230-175	25230-175	26230-325	25230-325	
17	34	1567	553	500	20230-409	27230-112	26230-076	25230-076	26230-226	25230-226	27230-115
18	34	1567	553	600			26230-126	25230-126	26230-276	25230-276	
19	34	1567	553	800			26230-176	25230-176	26230-326	25230-326	
20	38	1745	553	500	20230-409	27230-112	26230-077	25230-077	26230-227	25230-227	27230-115
21	38	1745	553	600			26230-127	25230-127	26230-277	25230-277	
22	38	1745	553	800			26230-177	25230-177	26230-327	25230-327	
23	43	1967	553	500	20230-409	27230-112	26230-078	25230-078	26230-228	25230-228	27230-115
24	43	1967	553	600			26230-128	25230-128	26230-278	25230-278	
25	43	1967	553	800			26230-178	25230-178	26230-328	25230-328	
26	47	2145	553	500	20230-409	27230-112	26230-079	25230-079	26230-229	25230-229	27230-115
27	47	2145	553	600			26230-129	25230-129	26230-279	25230-279	
28	47	2145	553	800			26230-179	25230-179	26230-329	25230-329	

If you would like to have the individual components of your configured ServicePLUS cabinet fitted, please add the suffix **/05** to the order number; please add the suffix **/35** for kits supplied loose

Further information **www.schroff.biz/oneclick** oneClick code = order number

Glass doors, steel doors

Order Information

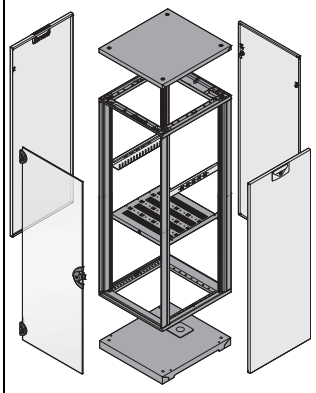

		Glass door (smoke grey)	Steel door	
		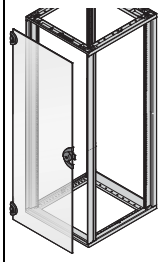 07011059	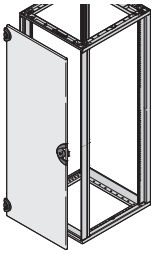 07011060 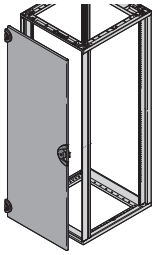 07011088	
		Opening angle 180°, lock with 2 keys, glass type: ESG 6 mm, EN 12150	St, 1.5 mm, lock (2233x) with 2 keys, opening angle 180°, incl. GND/ earthing	
	Cabinet dimensions	smoke grey	RAL 7035	RAL 7021
	Height / Width / Depth	1 piece	1 piece	1 piece
No.	U / mm / mm / mm	assembled	assembled	assembled
1	6 / 357 / 553 / 500	27230-001	26230-020	25230-020
2	6 / 357 / 553 / 600			
3	9 / 456 / 553 / 500	27230-002	26230-021	25230-021
4	9 / 456 / 553 / 600			
5	12 / 589 / 553 / 500	27230-003	26230-022	25230-022
6	12 / 589 / 553 / 600			
7	12 / 589 / 553 / 800			
8	16 / 767 / 553 / 500	27230-004	26230-023	25230-023
9	16 / 767 / 553 / 600			
10	16 / 767 / 553 / 800			
11	20 / 945 / 553 / 500	27230-005	26230-024	25230-024
12	20 / 945 / 553 / 600			
13	20 / 945 / 553 / 800			
14	25 / 1167 / 553 / 500	27230-006	26230-025	25230-025
15	25 / 1167 / 553 / 600			
16	25 / 1167 / 553 / 800			
17	34 / 1567 / 553 / 500	27230-007	26230-026	25230-026
18	34 / 1567 / 553 / 600			
19	34 / 1567 / 553 / 800			
20	38 / 1745 / 553 / 500	27230-008	26230-027	25230-027
21	38 / 1745 / 553 / 600			
22	38 / 1745 / 553 / 800			
23	43 / 1967 / 553 / 500	27230-009	26230-028	25230-028
24	43 / 1967 / 553 / 600			
25	43 / 1967 / 553 / 800			
26	47 / 2145 / 553 / 500	27230-010	26230-029	25230-028
27	47 / 2145 / 553 / 600			
28	47 / 2145 / 553 / 800			

If you would like to have the individual components of your configured ServicePLUS cabinet fitted, please add the suffix **/05** to the order number

Further information **www.schroff.biz/oneclick** oneClick code = order number

Part number in bold face type: ready for despatch within 2 working days
Part number in normal type: ready for despatch within 10 working days

Cable ducting combination for steel doors

Order Information

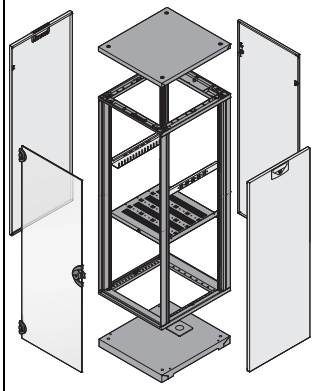

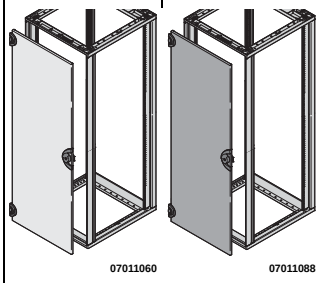

07011060 07011088

St, 1.5 mm, lock (2233x) with 2 keys, opening angle 180°, incl. GND/ earthing

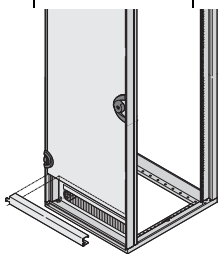

07011061

Door hinge bracket, St, 2 mm, RAL 7021; mounts above or below the door; requires 1 U assembly space

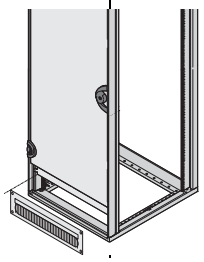

07011061

St, 2.5 mm, with black brush strip
1) Height 3 U 2) Height 4 U

	Cabinet dimensions				Cable ducting combination for steel door with door hinge bracket and frame						
					Steel door		Door hinge bracket for doors			Cable ducting frame	
					RAL 7035	RAL 7021	Slim-Line front	Slim-Line rear	Heavy-Duty front/rear	RAL 7035	RAL 7021
	Height		Width	Depth							
No.	U	mm	mm	mm	1 piece assembled	1 piece assembled	33 mm 1 piece assembled	60 mm 1 piece assembled	60 mm 1 piece assembled	1 piece assembled	1 piece assembled
1	6	357	553	500	–	–	–	–	–	–	–
2	6	357	553	600							
3	9	456	553	500	–	–	–	–	–	–	–
4	9	456	553	600							
5	12	589	553	500	–	–	–	–	–	–	–
6	12	589	553	600							
7	12	589	553	800							
8	16	767	553	500	26230-022	25230-022	27230-060	27230-061	27230-061	1) 20118-391	1) 20118-796
9	16	767	553	600							
10	16	767	553	800							
11	20	945	553	500	26230-023	25230-023	27230-060	27230-061	27230-061	1) 20118-391	1) 20118-796
12	20	945	553	600							
13	20	945	553	800							
14	25	1167	553	500	26230-024	25230-024	27230-060	27230-061	27230-061	2) 20118-390	2) 20118-797
15	25	1167	553	600							
16	25	1167	553	800							
17	34	1567	553	500	26230-030	25230-030	27230-060	27230-061	27230-061	2) 20118-390	2) 20118-797
18	34	1567	553	600							
19	34	1567	553	800							
20	38	1745	553	500	26230-026	25230-026	27230-060	27230-061	27230-061	1) 20118-391	1) 20118-796
21	38	1745	553	600							
22	38	1745	553	800							
23	43	1967	553	500	26230-027	25230-027	27230-060	27230-061	27230-061	2) 20118-390	2) 20118-797
24	43	1967	553	600							
25	43	1967	553	800							
26	47	2145	553	500	26230-028	25230-028	27230-060	27230-061	27230-061	1) 20118-391	1) 20118-796
27	47	2145	553	600							
28	47	2145	553	800							

If you would like to have the individual components of your configured ServicePLUS cabinet fitted, please add the suffix **/05** to the order number

Further information **www.schroff.biz/oneclick** oneClick code = order number

Rear panels

Order Information

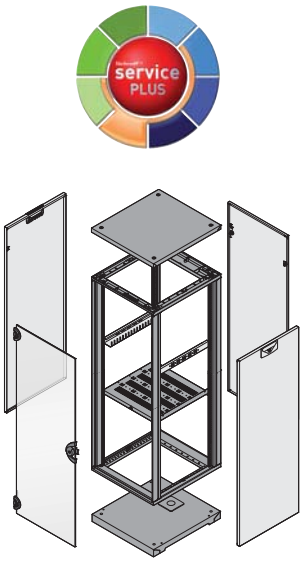

	Rear panel		Rear panel with cable ducting and door hinge bracket		Rear panel lock
	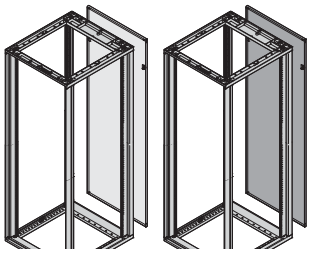 07011057 07011086		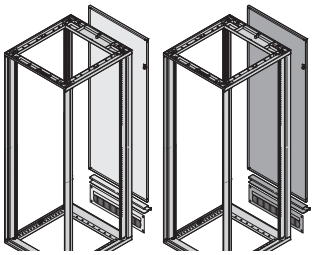 07011058 07011087		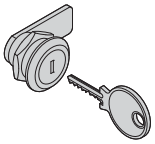 07011107
	St, 1 mm; twist-locking catch (Torx T30, with 1/4 turn); incl. GND/ earthing		St, 1 mm; twist-locking catch (Torx T30, with 1/4 turn), incl. GND/ earthing; cable ducting and door hinge bracket; cable ducting can be fitted top or bottom, 3 U cable ducting for cabinet heights 16, 20, 38, 47 U; 4 U cable ducting for cabinet heights 25, 34, 43 U		Rear panel twist-locking catch with lock (2233x) and key
	RAL 7035	RAL 7021	RAL 7035	RAL 7021	
	1 piece	1 piece	PU 1 kit	PU 1 kit	PU 2 pieces
	assembled	assembled	assembled	assembled	assembled

No.	Cabinet dimensions Height U	Height mm	Width mm	Depth mm	RAL 7035 1 piece assembled	RAL 7021 1 piece assembled	RAL 7035 PU 1 kit assembled	RAL 7021 PU 1 kit assembled	PU 2 pieces assembled
1	6	357	553	500	26230-370	25230-370	–	–	27230-116
2	6	357	553	600					
3	9	456	553	500	26230-371	25230-371	–	–	27230-116
4	9	456	553	600					
5	12	589	553	500	26230-372	25230-372	–	–	27230-116
6	12	589	553	600					
7	12	589	553	800					
8	16	767	553	500	26230-373	25230-373	26230-430	25230-430	27230-116
9	16	767	553	600					
10	16	767	553	800					
11	20	945	553	500	26230-374	25230-374	26230-434	25230-434	27230-116
12	20	945	553	600					
13	20	945	553	800					
14	25	1167	553	500	26230-375	25230-375	26230-439	25230-439	27230-116
15	25	1167	553	600					
16	25	1167	553	800					
17	34	1567	553	500	26230-376	25230-376	26230-448	25230-448	27230-116
18	34	1567	553	600					
19	34	1567	553	800					
20	38	1745	553	500	26230-377	25230-377	26230-452	25230-452	27230-116
21	38	1745	553	600					
22	38	1745	553	800					
23	43	1967	553	500	26230-378	25230-378	26230-457	25230-457	27230-116
24	43	1967	553	600					
25	43	1967	553	800					
26	47	2145	553	500	26230-379	25230-379	26230-461	25230-461	27230-116
27	47	2145	553	600					
28	47	2145	553	800					

If you would like to have the individual components of your configured ServicePLUS cabinet fitted, please add the suffix **/05** to the order number

Further information **www.schroff.biz/oneclick** oneClick code = order number

Part number in bold face type: ready for despatch within 2 working days
Part number in normal type: ready for despatch within 10 working days

Top covers

Order Information

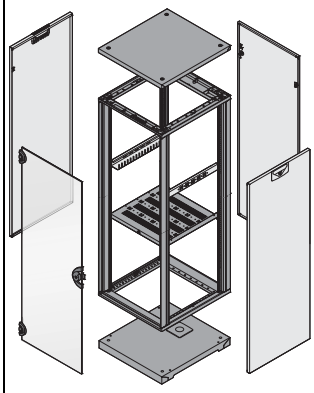

					Top cover		Top cover	
					Flush	Lifting eye	Raised	Lifting eye
					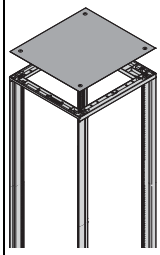 07011063	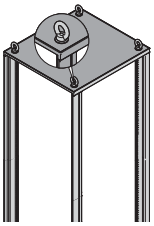 07011071	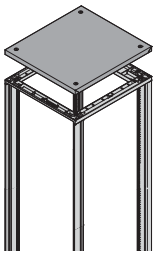 07011064	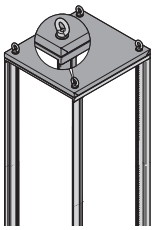 07011072
					St, 1 mm, RAL 7021, incl. GND/earthing	for flush cover; M12, application and loading as per DIN 582	St, 1 mm, RAL 7021, incl. GND/earthing, height 31 mm, air gap 10 mm	for raised cover or fan top cover; M12, application and loading as per DIN 582
	Cabinet dimensions							
	Height		Width	Depth	1 piece	PU 4 pieces	1 piece	PU 4 pieces
No.	U	mm	mm	mm	assembled	assembled	assembled	assembled
1	6	357	553	500	25230-001	27230-066	25230-010	27230-065
2	6	357	553	600	25230-002		25230-011	
3	9	456	553	500	25230-001	27230-066	25230-010	27230-065
4	9	456	553	600	25230-002		25230-011	
5	12	589	553	500	25230-001	27230-066	25230-010	27230-065
6	12	589	553	600	25230-002		25230-011	
7	12	589	553	800	25230-003		25230-012	
8	16	767	553	500	25230-001	27230-066	25230-010	27230-065
9	16	767	553	600	25230-002		25230-011	
10	16	767	553	800	25230-003		25230-012	
11	20	945	553	500	25230-001	27230-066	25230-010	27230-065
12	20	945	553	600	25230-002		25230-011	
13	20	945	553	800	25230-003		25230-012	
14	25	1167	553	500	25230-001	27230-066	25230-010	27230-065
15	25	1167	553	600	25230-002		25230-011	
16	25	1167	553	800	25230-003		25230-012	
17	34	1567	553	500	25230-001	27230-066	25230-010	27230-065
18	34	1567	553	600	25230-002		25230-011	
19	34	1567	553	800	25230-003		25230-012	
20	38	1745	553	500	25230-001	27230-066	25230-010	27230-065
21	38	1745	553	600	25230-002		25230-011	
22	38	1745	553	800	25230-003		25230-012	
23	43	1967	553	500	25230-001	27230-066	25230-010	27230-065
24	43	1967	553	600	25230-002		25230-011	
25	43	1967	553	800	25230-003		25230-012	
26	47	2145	553	500	25230-001	27230-066	25230-010	27230-065
27	47	2145	553	600	25230-002		25230-011	
28	47	2145	553	800	25230-003		25230-012	

If you would like to have the individual components of your configured ServicePLUS cabinet fitted, please add the suffix **/05** to the order number

Further information **www.schroff.biz/oneclick** oneClick code = order number

Fan top covers, lifting eyes

Order Information

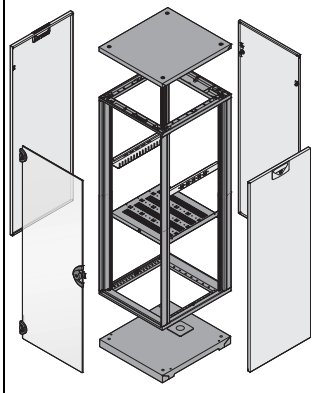

	Cabinet dimensions				Fan top cover (fan H=25 mm)		Fan top cover (fan H=38 mm)		Lifting eye	Thermostat	Speed control
	Height		Width	Depth	Fan top cover with fans	Fan 84 ... 90 m³	Fan top cover with fans	Fan 162 ... 172 m³			
	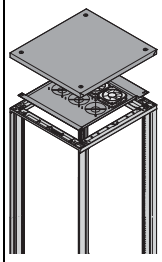 07011082				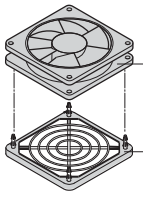 kta44844		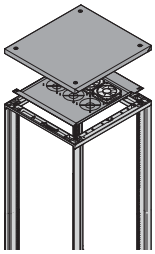 07011082	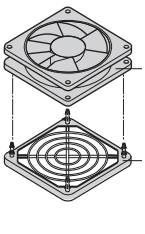 kta44844	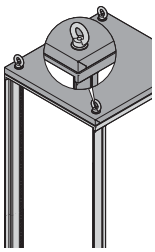 07011072	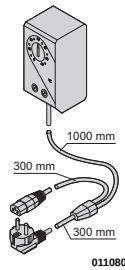 01108052	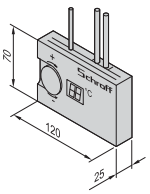 01105055
	St, RAL 7021, incl. GND/ earthing and cabling; 2 fans for 500 mm depth, 1 cover cap; 3 fans for 600/800 mm depth, 3 cover caps; connection 0.5 m, IEC C14 plug				Axial fan with protective grille, 230 V_{AC}, 8 W, 84 ... 90 m³/h 29 ... 30 dB(A), height 25 mm; when additional fans are required		St, RAL 7021, incl. GND/ earthing and cabling; 2 fans for 500 mm depth, 1 cover cap; 3 fans for 600/800 mm depth, 3 cover caps; connection 0.5 m, IEC C14 plug	Axial fan with protective grille, 230 V_{AC}, 15 W, 162 ... 172 m³/h 37 ... 41 dB(A), height 38 mm; when additional fans are required	for raised cover or fan top cover; M12, application and loading as per DIN 582	wired with mains cable 230 V_{AC} (SCHUKO/UTE plug/ IEC 60320 C13 socket), adjustment range 0 ... 60°C	completely wired, 90 ... 264 V_{AC}, input SCHUKO/ UTE plug, output IEC 60320 C13 socket; external NTC sensor, 1.5 m
No.	U	mm	mm	mm	PU 1 kit assembled	1 piece assembled	PU 1 kit assembled	1 piece assembled	PU 4 pieces assembled	1 piece assembled	1 piece assembled
1	6	357	553	500	27230-081	27230-077	27230-085	27230-078	27230-065	20118-750	60715-005
2	6	357	553	600	27230-082		27230-086				
3	9	456	553	500	27230-081	27230-077	27230-085	27230-078	27230-065	20118-750	60715-005
4	9	456	553	600	27230-082		27230-086				
5	12	589	553	500	27230-081	27230-077	27230-085	27230-078	27230-065	20118-750	60715-005
6	12	589	553	600	27230-082		27230-086				
7	12	589	553	800	27230-083		27230-087				
8	16	767	553	500	27230-081	27230-077	27230-085	27230-078	27230-065	20118-750	60715-005
9	16	767	553	600	27230-082		27230-086				
10	16	767	553	800	27230-083		27230-087				
11	20	945	553	500	27230-081	27230-077	27230-085	27230-078	27230-065	20118-750	60715-005
12	20	945	553	600	27230-082		27230-086				
13	20	945	553	800	27230-083		27230-087				
14	25	1167	553	500	27230-081	27230-077	27230-085	27230-078	27230-065	20118-750	60715-005
15	25	1167	553	600	27230-082		27230-086				
16	25	1167	553	800	27230-083		27230-087				
17	34	1567	553	500	27230-081	27230-077	27230-085	27230-078	27230-065	20118-750	60715-005
18	34	1567	553	600	27230-082		27230-086				
19	34	1567	553	800	27230-083		27230-087				
20	38	1745	553	500	27230-081	27230-077	27230-085	27230-078	27230-065	20118-750	60715-005
21	38	1745	553	600	27230-082		27230-086				
22	38	1745	553	800	27230-083		27230-087				
23	43	1967	553	500	27230-081	27230-077	27230-085	27230-078	27230-065	20118-750	60715-005
24	43	1967	553	600	27230-082		27230-086				
25	43	1967	553	800	27230-083		27230-087				
26	47	2145	553	500	27230-081	27230-077	27230-085	27230-078	27230-065	20118-750	60715-005
27	47	2145	553	600	27230-082		27230-086				
28	47	2145	553	800	27230-083		27230-087				

If you would like to have the individual components of your configured ServicePLUS cabinet fitted, please add the suffix **/05** to the order number

Further information **www.schroff.biz/oneclick** oneClick code = order number

Part number in bold face type: ready for despatch within 2 working days
Part number in normal type: ready for despatch within 10 working days

Bases, plinths, stationary shelves

Order Information

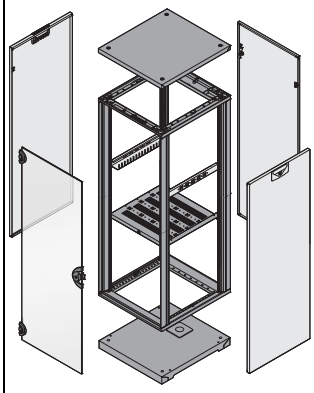

					Base			Base/plinth		Shelf, stationary
					Base plate, rear open	Cover plate	Brush strip	with cable ducting	Brush strip	
					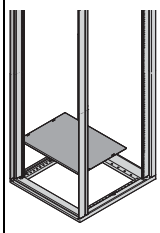 07011073	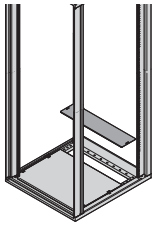 07011073	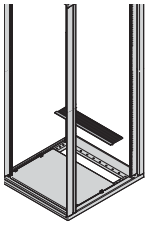 07011073	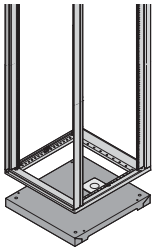 07011075	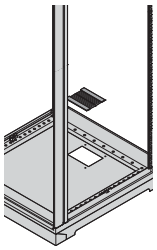 07011077	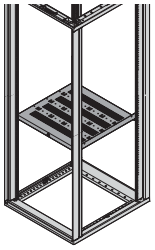 07011077
					St, 1.5 mm, RAL 7021, incl. GND/earthing; cable ducting in rear cabinet area; please order cover or brush strip separately	St, 1.5 mm, 485 x 92 mm; for covering the rear floor opening	Nylon, black, 440 x 98 mm; for covering the rear floor opening	St, 1.5 mm, RAL 7021, height 55 mm; incl. GND/earthing; cable ducting 110 x 76 mm; adjustable feet, adjustable height range 57 mm ... 67 mm	Nylon, black, 110 mm x 76 mm; to cover cable through-ducting opening	St, 1.5 mm, RAL 7021, with perforation, static load-carrying capacity 75 kg
	Cabinet dimensions									
	Height		Width	Depth						
No.	U	mm	mm	mm	1 piece assembled	1 piece assembled	1 piece assembled	1 piece assembled	1 piece assembled	1 piece assembled
1	6	357	553	500	27230-091	27230-114	27230-079	27230-070	27230-111	27230-051
2	6	357	553	600	27230-092			27230-071		27230-052
3	9	456	553	500	27230-091	27230-114	27230-079	27230-070	27230-111	27230-051
4	9	456	553	600	27230-092			27230-071		27230-052
5	12	589	553	500	27230-091	27230-114	27230-079	27230-070	27230-111	27230-051
6	12	589	553	600	27230-092			27230-071		27230-052
7	12	589	553	800	27230-093			27230-072		27230-053
8	16	767	553	500	27230-091	27230-114	27230-079	27230-070	27230-111	27230-051
9	16	767	553	600	27230-092			27230-071		27230-052
10	16	767	553	800	27230-093			27230-072		27230-053
11	20	945	553	500	27230-091	27230-114	27230-079	27230-070	27230-111	27230-051
12	20	945	553	600	27230-092			27230-071		27230-052
13	20	945	553	800	27230-093			27230-072		27230-053
14	25	1167	553	500	27230-091	27230-114	27230-079	27230-070	27230-111	27230-051
15	25	1167	553	600	27230-092			27230-071		27230-052
16	25	1167	553	800	27230-093			27230-072		27230-053
17	34	1567	553	500	27230-091	27230-114	27230-079	27230-070	27230-111	27230-051
18	34	1567	553	600	27230-092			27230-071		27230-052
19	34	1567	553	800	27230-093			27230-072		27230-053
20	38	1745	553	500	27230-091	27230-114	27230-079	27230-070	27230-111	27230-051
21	38	1745	553	600	27230-092			27230-071		27230-052
22	38	1745	553	800	27230-093			27230-072		27230-053
23	43	1967	553	500	27230-091	27230-114	27230-079	27230-070	27230-111	27230-051
24	43	1967	553	600	27230-092			27230-071		27230-052
25	43	1967	553	800	27230-093			27230-072		27230-053
26	47	2145	553	500	27230-091	27230-114	27230-079	27230-070	27230-111	27230-051
27	47	2145	553	600	27230-092			27230-071		27230-052
28	47	2145	553	800	27230-093			27230-072		27230-053

If you would like to have the individual components of your configured ServicePLUS cabinet fitted, please add the suffix **/05** to the order number

Further information **www.schroff.biz/oneclick** oneClick code = order number

Shelves

Order Information

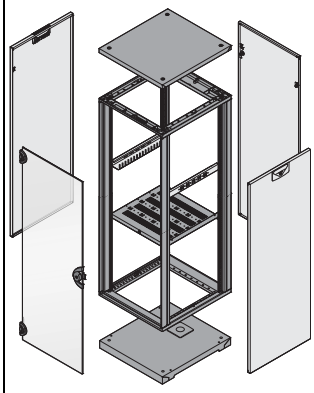

		Shelf, telescopic, 2 U, 70 kg			
		Full depth	Shortened by 100 mm	T-bar lock	GND/earthing
		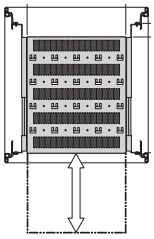 07011101	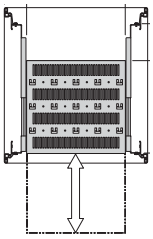 07011102	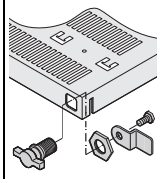 01004125	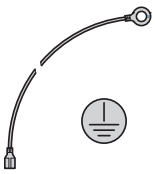 aza43284
		St, 1.5 mm, RAL 7021, static load-carrying capacity when fully extended 70 kg, incl. telescopic slide; please order T-bar lock and earthing kit separately		to lock the telescopic shelf	for telescopic shelf
	Cabinet dimensions				
	Height	Width	Depth	1 piece	1 piece	1 piece	PU 1 kit
No.	U mm	mm	mm	assembled	assembled	assembled	assembled
1	6 357	553	500	21130-357	21130-358	23130-092	21120-189
2	6 357	553	600	21130-353	21130-352		
3	9 456	553	500	21130-357	21130-358	23130-092	21120-189
4	9 456	553	600	21130-353	21130-352		
5	12 589	553	500	21130-357	21130-358	23130-092	21120-189
6	12 589	553	600	21130-353	21130-352		
7	12 589	553	800	21130-355	21130-354		
8	16 767	553	500	21130-357	21130-358	23130-092	21120-189
9	16 767	553	600	21130-353	21130-352		
10	16 767	553	800	21130-355	21130-354		
11	20 945	553	500	21130-357	21130-358	23130-092	21120-189
12	20 945	553	600	21130-353	21130-352		
13	20 945	553	800	21130-355	21130-354		
14	25 1167	553	500	21130-357	21130-358	23130-092	21120-189
15	25 1167	553	600	21130-353	21130-352		
16	25 1167	553	800	21130-355	21130-354		
17	34 1567	553	500	21130-357	21130-358	23130-092	21120-189
18	34 1567	553	600	21130-353	21130-352		
19	34 1567	553	800	21130-355	21130-354		
20	38 1745	553	500	21130-357	21130-358	23130-092	21120-189
21	38 1745	553	600	21130-353	21130-352		
22	38 1745	553	800	21130-355	21130-354		
23	43 1967	553	500	21130-357	21130-358	23130-092	21120-189
24	43 1967	553	600	21130-353	21130-352		
25	43 1967	553	800	21130-355	21130-354		
26	47 2145	553	500	21130-357	21130-358	23130-092	21120-189
27	47 2145	553	600	21130-353	21130-352		
28	47 2145	553	800	21130-355	21130-354		

If you would like to have the individual components of your configured ServicePLUS cabinet fitted, please add the suffix **/05** to the order number

Further information **www.schroff.biz/oneclick** oneClick code = order number

Part number in bold face type: ready for despatch within 2 working days
Part number in normal type: ready for despatch within 10 working days

Slide rails, cable ties, Velcro-type tapes

Order Information

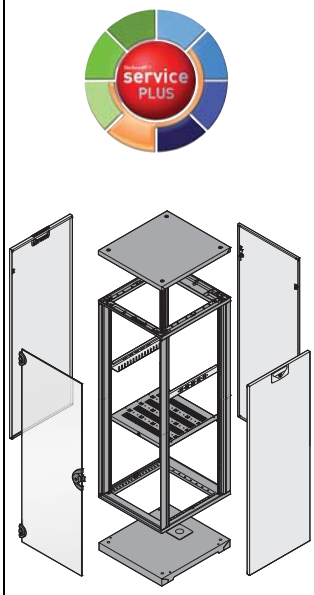

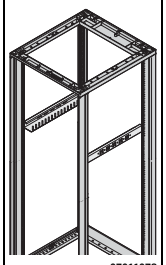

07011078

St, 1.5 mm, finish/ surface AlZn, static load-carrying capacity 25 kg/pair

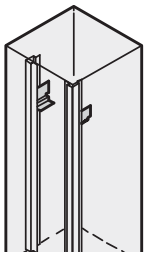

ERA46348

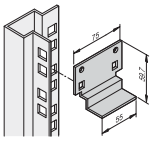

SC96XXXX

St, 1.5 mm, finish AlZn, static load-carrying capacity 15 kg/pair

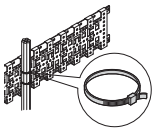

01005078

plastic, 92 mm x 2.5 mm

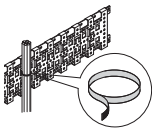

01005079

black, length 300 mm

General components in the main catalogue

Mechanics from page 3.2

Electrics from page 3.31

Climate control from page 4.0

	Cabinet dimensions				Slide rail			Cable tie	Velcro
	Height		Width	Depth	Slide rail	Short slide rail			
No.	U	mm	mm	mm	PU 2 pieces assembled	PU 2 pieces supplied loose	PU 10 pieces supplied loose	PU 25 pieces supplied loose	PU 10 pieces supplied loose
1	6	357	553	500	27230-102	27230-125	27230-126	20118-351	20118-624
2	6	357	553	600	27230-103				
3	9	456	553	500	27230-102	27230-125	27230-126	20118-351	20118-624
4	9	456	553	600	27230-103				
5	12	589	553	500	27230-102	27230-125	27230-126	20118-351	20118-624
6	12	589	553	600	27230-103				
7	12	589	553	800	27230-104				
8	16	767	553	500	27230-102	27230-125	27230-126	20118-351	20118-624
9	16	767	553	600	27230-103				
10	16	767	553	800	27230-104				
11	20	945	553	500	27230-102	27230-125	27230-126	20118-351	20118-624
12	20	945	553	600	27230-103				
13	20	945	553	800	27230-104				
14	25	1167	553	500	27230-102	27230-125	27230-126	20118-351	20118-624
15	25	1167	553	600	27230-103				
16	25	1167	553	800	27230-104				
17	34	1567	553	500	27230-102	27230-125	27230-126	20118-351	20118-624
18	34	1567	553	600	27230-103				
19	34	1567	553	800	27230-104				
20	38	1745	553	500	27230-102	27230-125	27230-126	20118-351	20118-624
21	38	1745	553	600	27230-103				
22	38	1745	553	800	27230-104				
23	43	1967	553	500	27230-102	27230-125	27230-126	20118-351	20118-624
24	43	1967	553	600	27230-103				
25	43	1967	553	800	27230-104				
26	47	2145	553	500	27230-102	27230-125	27230-126	20118-351	20118-624
27	47	2145	553	600	27230-103				
28	47	2145	553	800	27230-104				

If you would like to have the individual components of your configured ServicePLUS cabinet fitted, please add the suffix **/05** to the order number; please add the suffix **/35** for kits supplied loose

Further information **www.schroff.biz/oneclick** oneClick code = order number

Dimension drawings Slim-Line frames

Frame

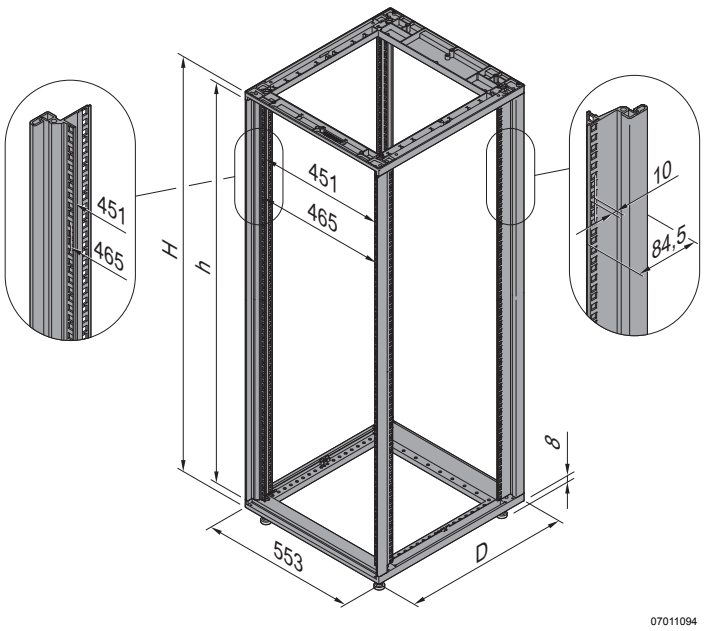

Frame dimensions

Cabinet height	H	h
U	mm	mm
6	357	268
9	456	401
12	589	535
16	767	713
20	945	890
25	1167	1112
34	1567	1513
38	1745	1690
43	1967	1913
47	2145	2090

Frame (top view)

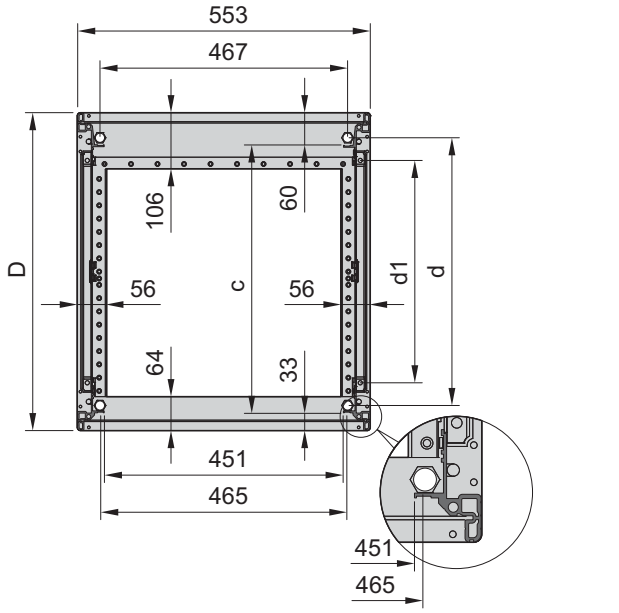

Frame dimensions

D	d	c	d1
mm	mm	mm	mm
500	387	407	319
600	487	507	419
800	687	707	619

Upright at front

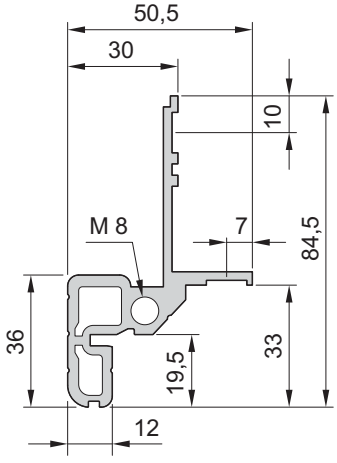

Upright at rear

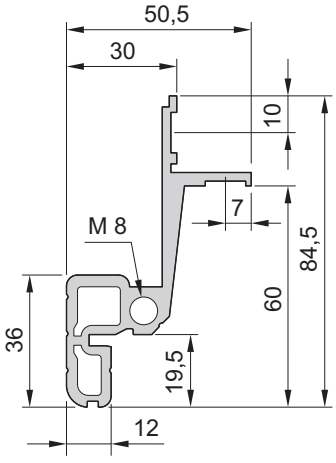

Part number in bold face type: ready for despatch within 2 working days
Part number in normal type: ready for despatch within 10 working days

Dimension drawings Heavy-Duty frames

Frame

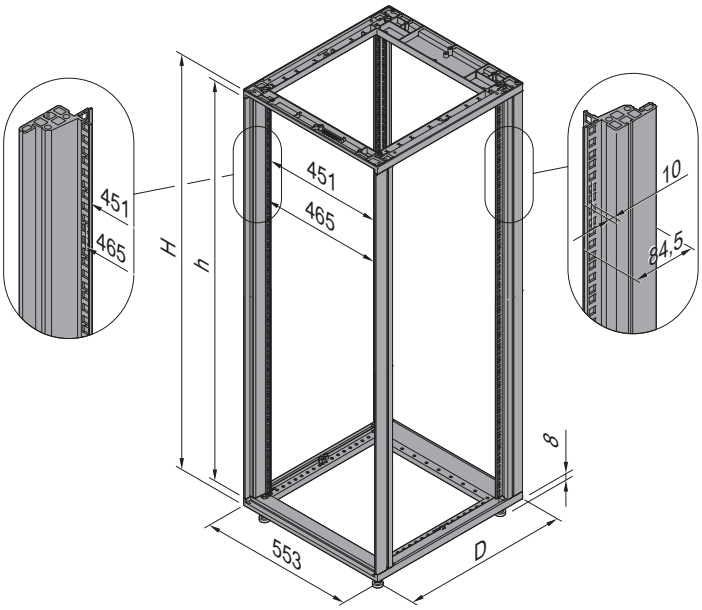

07011095

Frame dimensions

Cabinet height	H	h
U	mm	mm
16	767	713
20	945	890
25	1167	1112
34	1567	1513
38	1745	1690
43	1967	1913
47	2145	2090

Frame (top view)

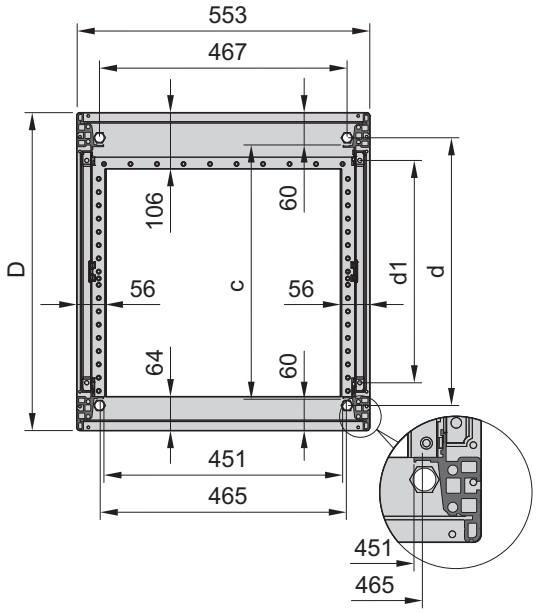

07011100

Frame

D	d	c	d1
mm	mm	mm	mm
500	387	380	319
600	487	480	419
800	687	680	619

Upright front/rear

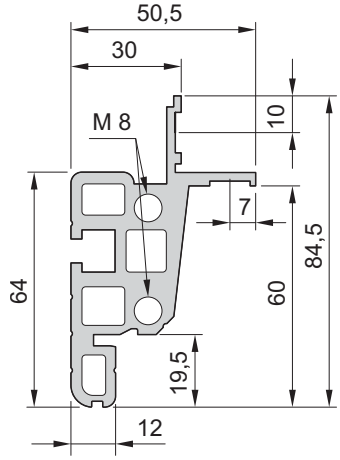

07011099

Pentair
Technical Products

Schroff®

About Pentair Technical Products

Pentair Technical Products, a Pentair global business unit, is the leading provider of worldwide product and service solutions for enclosing, protecting and cooling electrical and electronic systems. Its industry-leading brands – Hoffman®, Schroff®, McLean® Cooling Technology, Calmark®, Birtcher®, Aspen Motion Technologies™ and Taunus™ – provide a broad variety of standard, modified and engineered solutions to the commercial, communications, energy, general electronics, industrial, infrastructure, medical, and security and defense markets.



NORTH AMERICA

Pentair Technical Products
2100 Hoffman Way
Anoka, MN 55303-1745
Tel: +1 (763) 421-2240

170 Commerce Drive
Warwick, RI 02886
Tel. +1 (401) 732-3770

7328 Trade Street
San Diego, CA 92121
Tel. +1 (858) 740-2400

1120 Rock Road
Radford, VA 24141
Tel: +1 (540) 639-4440

Pentair Technical Products
Hoffman Enclosures Inc.
111 Grangeway Ave., #504
Scarborough, ON M1H 3E9
Tel: +1 (416) 289-2770

Pentair Technical Products
Hoffman Enclosures Mexico,
S. de R.L. de C.V.
Arquimedes 33 Piso 1
Colonia Palmas Polanco
Mexico DF 11560
Tel: +52 55 5280 1449

SOUTH AMERICA

Pentair Technical Products
Pentair Taunus Electrometalurgica Ltda
Rua Joao Marcon, 165
18550.000 – Centro Boituva – SP Brazil
Tel: +55 15 3363 9100

EUROPE

Pentair Technical Products
Schroff GmbH
Langenalber Straße 96-100
75334 Straubenhardt, Germany
Tel. +49 (0)7082 794-0

Pentair Technical Products
Schroff UK Ltd.
Maylands Avenue
Hemel Hempstead
Herts HP2 7DE Great Britain
Tel. +44 (0)1442 240 471

Pentair Technical Products
Schroff SAS
Z.I. 4, rue du Marais
Boîte Postale 16
67660 Betschdorf, France
Tel. +33 (0)3 88 90 64 90

EUROPE

Pentair Technical Products
Schroff Scandinavia AB
Flygfältsgatan 11
P.O. Box 2003
12821 Skarpnäck, Sweden
Tel. +46 (0) 8 683 61 00

Pentair Technical Products
Schroff Scandinavia AB
Peräsimentie 8
FIN-03100 Nummela
Finland
Tel. +358 9 222 68 00

Pentair Technical Products
Schroff S.r.l.
Via Brughiera 1
20010 Pregnana Milanese (MI)
Italy
Tel. +39 02 932 714-1

Pentair Technical Products
Pentair Poland Sp.z.o.o.
ul. Marynarska 21
PL-02-674 Warszawa Poland
Tel. +48 (0) 22 607 06 16

ASIA

Pentair Technical Products
21st Floor of Cloud Nine Plaza
No. 1118 West Yan'an Road
Changning District, Shanghai
P.R. China
Tel: +86 400 820 1133

Pentair Technical Products
India Pvt. Ltd.
Unit 1, Factory 2
(Sai Lakshmi Industrial Campus)
Kannamangala, Bidarahalli Hobli
Whitefield – Hoskote Road
Bangalore – 560 067
Tel: +91 80 2845 4640

Pentair Technical Products
Hoffman Schroff Pte Ltd.
18 Boon Lay Way
TradeHub 21, #04-110/111
Singapore 609966
Tel: +65 6795 2213

Pentair Technical Products
Schroff K.K.
Nisso No.13 Bldg. 4F
2-5-1 Shinyokohama
Kohoku-ku yokohama-shi
Kanagawa 222-0033 Japan
Tel. +81 (0)45 476 02 81

For further information please visit:
pentairtechnicalproducts.com

www.schroff.biz

39601-527 03/2011 © Pentair Technical Products