

Software and Display instruments

272 Overview Software and Display instruments

276 VEGA Inventory System

278 DTM Collection und PACTware

279 VEGACONNECT

280 PLICSCOM, PLICSLED

282 VEGADIS 81, 82, 176



Overview Software and Display instruments

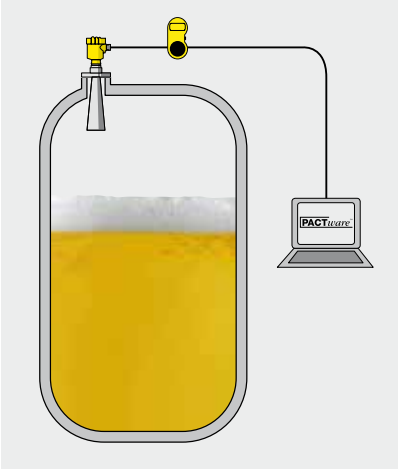

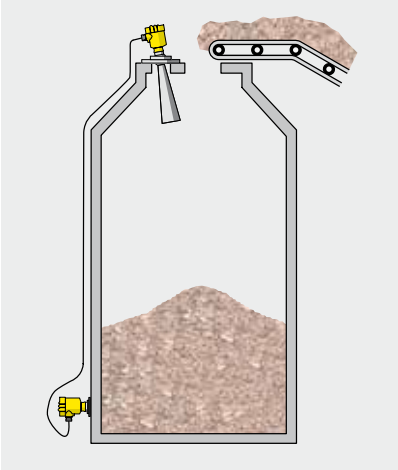

Area of application

Parameterization of sensors and visualization of measured values via on-site display units. The visualization and monitoring of measured values can also be carried out via the web-based VEGA Inventory System.

Systems

Any sensor can be completely configured with the adjustment software PACTware. Alternatively, the adjustment module PLICSCOM can be used to configure a sensor directly on site. The web-based visualization tool VEGA Inventory System collects readings from connected sensors anywhere in the world and displays them in a clear, well-organized layout.

Advantages

Depending on the requirements, the user can adjust the sensors either on site with an adjustment module or from the control room with a PC. If necessary, additional display units can be connected in the measurement loop to display the readings at other locations. It is also very easy to set up a visualization system that allows the readings to be displayed worldwide via a standard browser.

	VEGA Inventory System	DTM Collection
		
Application	System for inventory monitoring as well as remote enquiry and visualization of measured values	Adjustment software for configuration, parameter adjustment, documentation and diagnosis for field devices
Recommended operating systems	▪ Independent of operating system (VEGA Hosting Service) ▪ MS Windows Server 2008 or higher as well as MS SQL Server 2008 or higher (Local Server)	Windows XP from SP2 (32 Bit) Windows Vista (32 or 64 Bit) Windows 7 (32 or 64 Bit) Windows 8 (32 or 64 Bit)
Adjustment	with standard web browser	via computer
Versions	▪ VEGA Hosting Service (VH) ▪ Local Server (LS)	▪ Standard version ▪ Full version
Technology	Web-based	FDT/DTM

	PLICSCOM	PLICSLED	VEGACONNECT
			
Application	Measured value indication and adjustment on plics® sensors	Switching status indication directly on the sensor	Interface adapter between PC and VEGA instruments
Sensors	All plics® sensors	All plics® sensors with relay output	All communication-capable VEGA sensors
Mounting	Directly in the sensor or in VEGADIS 61, 81, 82	Directly in the sensor	Directly in the sensor or handheld
Ambient temperature	-15 … +70 °C	-40 … +80 °C	-20 … +60 °C
Signal	Standard interface on the sensor	–	Standard interface or HART on the VEGA instrument, USB interface on the PC, on Fieldbus and Modbus sensors
Lighting	Available	Red-green or yellow-green	–
Protection	IP 66/67 in the sensor	IP 66/67 in the sensor	IP 40
Voltage supply	Via standard interface on the sensor	20 … 253 V AC/DC, 50/60 Hz	Via USB interface on the PC
Voltage loss	–	–	–
Approvals	–	–	ATEX, GOST

	VEGADIS 81	VEGADIS 82	VEGADIS 176
			
	External measured value indication and adjustment of plics® sensors	External measured value indication and adjustment of 4 ... 20 mA/HART sensors	Switching cabinet measured value indication of 4 … 20 mA/HART sensors
	All plics® sensors	Sensors with HART protocol	4 … 20 mA/HART sensors (active or passive)
	Tube, panel, wall mounting or carrier rail	Tube, panel, wall mounting or carrier rail	Panel mounting
	-15 … +70 °C	-15 … +70 °C	-10 … +60°C
	Standard interface	4 … 20 mA 4 … 20 mA/HART	4 … 20 mA 4 … 20 mA/HART
	Integrated	Integrated	Integrated
	IP 66/67	IP 66/67	IP 65 front, IP 20 rear
	Via standard interface on sensor	Via 4 … 20 mA current loop	Via 4 … 20 mA current loop
	–	Standard < 1.7 V, with lighting < 3.2 V	Standard < 1 V, with lighting < 2.9 V
	ATEX, IEC, CSA, GOST	ATEX, IEC	ATEX, IEC, FM, CSA

VEGA Inventory System – Hosting Service



VEGA hosted software solution for remote and inventory monitoring

Application area
The VEGA Inventory System is a web-based service for monitoring inventory levels as well as remote acquisition, visualization and archiving of measured values.

Your benefit
- Fast overview of your inventory
- Better planning capabilities
- Secure supply of inventory
- Increased logistics efficiency
- Long-term customer relationship

Services and support
- Setup and activation of the user account
- Proactive monitoring, maintenance and operation of the hosting infrastructure by VEGA
- Software updates and upgrades included
- Free-of-charge support by phone, e-mail and remote diagnosis
- Customizable service agreement through the worldwide service network of VEGA

VIS-VH.

Monthly hosting fee for VEGA hosted service
Price per measurement loop: **on request**

VEGA Inventory System - Local server version



On-premise software solution for remote and inventory monitoring

Application area
VEGA Inventory System is a web-based software for inventory monitoring as well as for remote data acquisition, visualization and archiving of measured values. Software for installation in your system environment.

Your benefit
- Quick overview of your inventory
- Better planning capabilities
- Secure supply of inventory
- Increased logistics efficiency
- Long-term customer relationship

System requirements
Server hardware
- At least 3.1 GHz (64 bit processor) or faster Multi-Core-CPU, 8 GB RAM, 60 GB free storage capacity
- Recommended Quad-Core-CPU or better, 16 GB or more RAM, 160 GB free storage capacity

Operating system
- Microsoft® Windows Server 2012

Software
- Microsoft® SQL server 2012 (incl. Reporting Services)
- Microsoft® Internet Information Services
- Microsoft® .NET Framework 4.0

Number of measurement loops
A 1 - 25 measurement loops
B 26 - 100 measurement loops
C 101 - 1000 measurement loops
D 1001 - 10000 measurement loops

VIS-LS.	

DTM Collection and PACTware



Open adjustment software with device description inclusive adjustment interface according to the FDT standard

Application area
PACTware is an adjustment software for configuration, parameter adjustment, documentation and diagnosis of field devices. They describe the sensors as well as signal conditioning instruments and show the adjustment completely and in graphical form. PACTware supports also DTMs of other manufacturers. Thus a manufacturer and communication-independent adjustment of different field devices is ensured. The standard version of the DTM Collection is available as a free-of-charge download under www.vega.com.

Your benefit
- User-friendly and unique adjustment program for the PC
- High adjustment comfort through graphic user guidance, project memory and documentation
- Extended functions through a full version optionally available as a data carrier with additional functions such as e.g. VEGA DATA Viewer, tank calculation, storing of echo curves and extended diagnosis

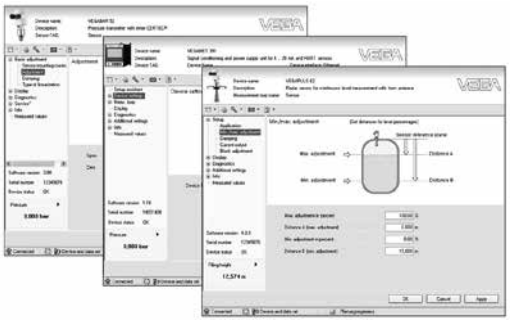

Technical data

Recommended operating systems
Windows XP ab SP2 (32 bit)
Windows Vista (32 or 64 bit)
Windows 7 (32 or 64 bit)
Windows 8 (32 oder 64 bit)

Other system requirements
1 GHz processor or higher
1 GB RAM or higher
1 GB free memory
Internet Explorer 6.0 or higher
Microsoft .NET Framework 2.0
RS232/USB/Ethernet interface
Graphic resolution 1024 x 768 or higher

Delivery time: SPEED

Software
SV Data carrier as standard version incl. project storage, documentation .....
FV Data carrier as full version with VEGA data viewer and tank calculation and extended measurement loop docume

PACTWARE.	

VEGACONNECT



Interface adapter between PC and communication-capable VEGA instruments

Application area
The VEGACONNECT is an interface adapter for connection of communication-capable VEGA instruments to the USB interface of a PC. In conjunction with PACTware and VEGA DTM, the VEGACONNECT can be also used as universal HART modem for sensors of other manufacturers.

Your benefit
- Simple use on plics® series instruments
- Versatile connection possibilities to different sensors through various attached connection cables and adapters
- Simple voltage supply through USB interface

Technical data

Ambient temperature:	-20 … +60 °C
Protection:	IP 40
Housing material:	plastic

Delivery time: SPEED

CONNECT.CXA4

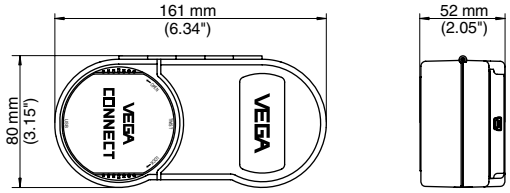

PLICSCOM



Pluggable display and adjustment module for plics® sensors

Application area
Universal display and adjustment module suitable for all sensors of the VEGA plics® family, VEGABAR series 50/60/80, VEGADIF 65, VEGACAL series 60, VEGAFLEX series 60/80, VEGAPULS series 60, VEGASON series 60, PROTRAC as well as VEGADIS 61, VEGADIS 81, VEGADIS 82 and PLICSRADIO.

Your benefit
- Minimum expenditure of time through reliable function and clear DOT matrix display with simple 4-key operation as well as integrated display lighting
- Simple and reliable adjustment of the plics® sensors through clear text indication with comprehensive graphic support
- Simple to detach, hence use also with other sensors

Technical data

Indication:	graphic-capable LC-display
Use:	all plics® sensors
Ambient temperature:	-15 … +70 °C

Delivery time: SPEED

Version
B with lighting .....

PLICSCOM.X	

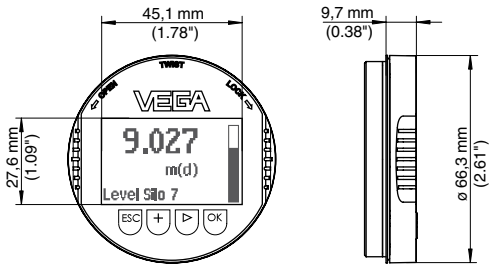

PLICSLED



Pluggable display module of the switching state for plics® sensors

Application area
Universal display module suitable for all sensors of the VEGA plics® family with relay output (VEGASWING 60 series, VEGAVIB 60 series, VEGAWAVE 60 series, VEGACAP 60 series and VEGAMIP 60 series)

Your benefit
- Min. time expenditure for installation as no external wiring necessary
- Clearly visible switching state indication even by strong daylight
- Universal use
- High protection rating, because the module is integrated into the plics® sensor housing

Technical data

Operating voltage:	20 … 253 V AC/DC, 50/60 Hz
Power consumption:	at 253 V AC; 0.8 W, 2 VA
Ambient temperature:	-40 … +80 °C
Display colour:	red-green or yellow-green

Delivery time: SPEED

Approval
XX without
Version
S Switching state
Colour
Y yellow-green
R red-green
Connection
C Cable

PLICSLED. | | | | |

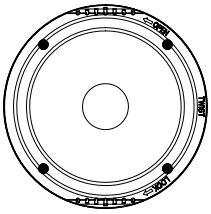

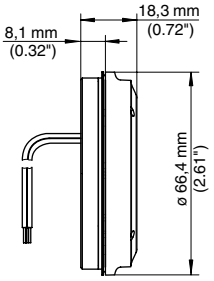

VEGADIS 81



External display and adjustment unit for plics® sensors

Application area
The VEGADIS 81 is an external, digital display and adjustment unit for all plics® sensors. The instrument is mounted in a distance of up to 50 m away from the sensor where it is easily accessible. It is directly connected to the electronics of the sensor from which it is also powered.

Your benefit
- Measured value indication and sensor adjustment in an easily accessible position
- Good readability of the display in clear text with graphic support (PLICSCOM)
- Simple adjustment via 4 keys and clearly structured program guide
- Reading and adjustment comfort through installation in 90° steps

Technical data

Display:	graphic-capable LC display
Signal:	standard interface
Sensors:	plics® sensors
Lighting:	available
Mounting:	tube, panel or wall mounting carrier rail 35 x 7.5 according to EN 50022
Ambient temperature:	-15 … +70 °C

Delivery time: SPEED

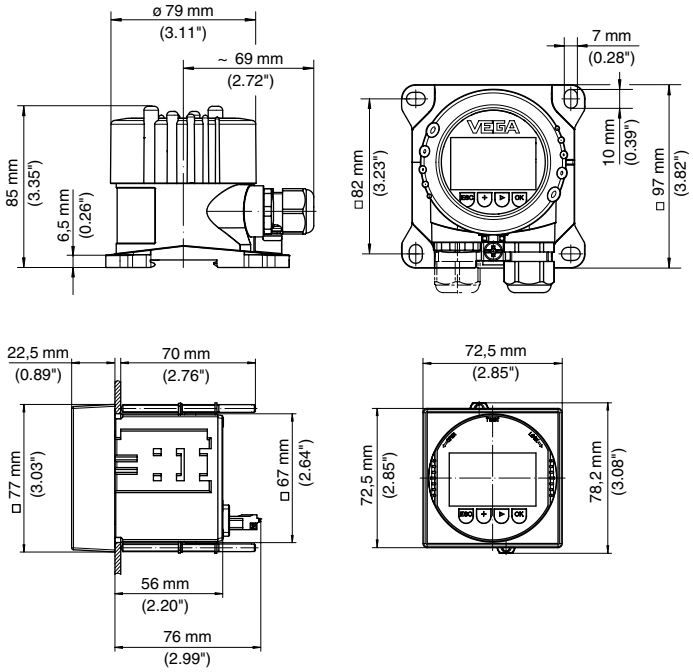

Scope

A Europe

I Worldwide

Approval

X for Ex-free area

M Ship approval

C ATEX II 1G, 2G Ex ia IIC T6 Ga, Gb

O ATEX II 1G, 2G Ex ia IIC T6 Ga, Gb + Ship approval

H ATEX II 1D, 2D Ex t IIIC T 75°C Da, Db IP66 + II 1G, 2G Ex ia IIC T6 Ga, Gb

E ATEX II 2G Ex d IIC T6 Gb

Q ATEX II 2G Ex d IIC T6 Gb + Ship approval

J ATEX II 1D, 2D Ex t IIIC T 75°C Da, Db IP66 + II 2G Ex d IIC T6 Gb

R ATEX II 1D, 2D Ex t IIIC T 75°C Da, Db IP66

C IEC Ex ia IIC T6 Ga, Gb

O IEC Ex ia IIC T6 Ga, Gb + Ship approval

H IEC Ex ia IIC T6 Ga, Gb + IEC Ex ta, tb IIIC T 75°C Da, Db, IP66

E IEC Ex d IIC T6 Gb

Q IEC Ex d IIC T6 Gb + Ship approval

J IEC Ex d IIC T6 Gb + IEC Ex ta, tb IIIC T 75°C Da, Db, IP66

R IEC Ex ta, tb IIIC T 75°C Da, Db, IP66

Electronics

I Digital (I²C communication)

Housing

K Plastic

A Aluminium

V Stainless steel (precision casting)

Protection

I IP66/IP67 NEMA 4X

N IP66/IP68 NEMA 6P (0.2bar)

Cable entry / Connection

M M20x1.5 / Cable gland PA black

N ½NPT / Blind plug

Indicating/adjustment module (PLICSCOM)

A Mounted

Mounting

A for wall mounting with Aluminium or StSt housing

C for carrier rail and wall mounting with plastic housing

D for carrier rail with Aluminium or StSt housing

E for tube mounting (29...60mm) incl. mounting material

Certificates

X no

M yes, further add. prices possible

DIS81.									

VEGADIS 82



External display and adjustment unit for 4 … 20 mA/HART sensors

Application area
The VEGADIS 82 is suitable for measured value indication and adjustment of 4 … 20 mA sensors, optionally with HART protocol. The instrument can be looped in any position directly in the signal cable. It operates as pure display instrument in a 4 … 20 mA current loop.

Your benefit
- Time and cost savings during the parameter adjustment on site with PLICSCOM
- Reliable and simple adjustment through clear text indication with graphic support
- Universal use through HART standard parameters

Technical data

Display:	PLICSCOM
Signal:	4 … 20 mA
Sensors:	sensors with HART protocol
Mounting:	wall, tube, or panel mounting carrier rail 35 x 7.5 acc. to EN 50022
Ambient temperature:	-15 … +70 °C

Delivery time: SPEED

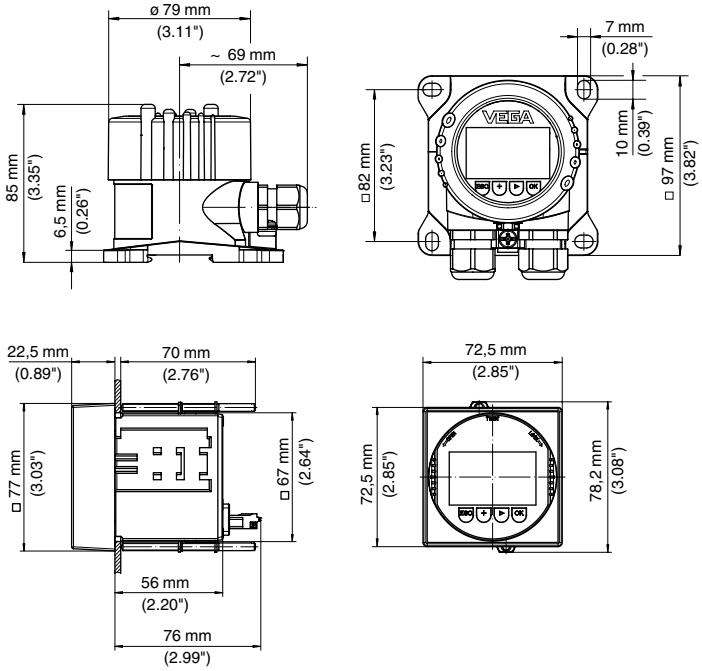

Scope

A Europe

I Worldwide

Approval

X for Ex-free area

M Ship approval

O IEC Ex ia IIC T6 Ga, Gb + Ship approval

Electronics

X Two-wire 4 ... 20mA

H Two-wire 4...20mA/HART®

Housing

K Plastic

A Aluminium

V Stainless steel (precision casting)

S for panel mounting (72x72mm)

Protection

I IP66/IP67 NEMA 4X

N IP66/IP68 NEMA 6P (0.2bar)

S IP 40 NEMA 2

Cable entry / Connection

M M20x1.5 / Cable gland PA black

N ½NPT / Blind plug

Indicating/adjustment module (PLICSCOM)

A Mounted

Mounting

A for wall mounting with Aluminium or StSt housing

C for carrier rail and wall mounting with plastic housing

D for carrier rail with Aluminium or StSt housing

E for tube mounting (29...60mm) incl. mounting material

F for panel mounting

Certificates

X no

M yes, further add. prices possible

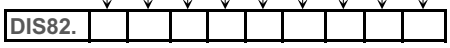

VEGADIS 176



External display and adjustment module for panel mounting without external energy

Application area
The VEGADIS 176 is an external display and adjustment module without additional external energy. It is used for separate measured value indication of all standardized 4 … 20 mA circuits.

Your benefir
- Universal use through five-digit, scalable 17 mm display with backlight
- Reliable function and various application possibilities thanks to a compact, robust housing with high protection rating in the front area
- The low voltage drop of < 1 V allows the use in most 4 … 20 mA circuits

Technical data

Display:	digital
Voltage drop:	< 1 V
Signal:	4 … 20 mA
Sensors:	4 … 20 mA passive or active
Ambient temperature:	-10 … +60 °C
Mounting:	panel mounting

Delivery time: SPEED

Scope
A Europe
I Worldwide
Approval
X for Ex-free area
C ATEX II 2G, Ex ib IIC T6 Gb
C IEC Ex ib IIC T6 Gb
Housing version / Protection
S Panel mounting / IP65: front side NEMA 4X; IP20: rear side
Electronics
I 4 ... 20 mA

DIS176. | | | | |

