Slot Type AC; DC 2-/3-/4-wire

Standard series

15 mm slot width

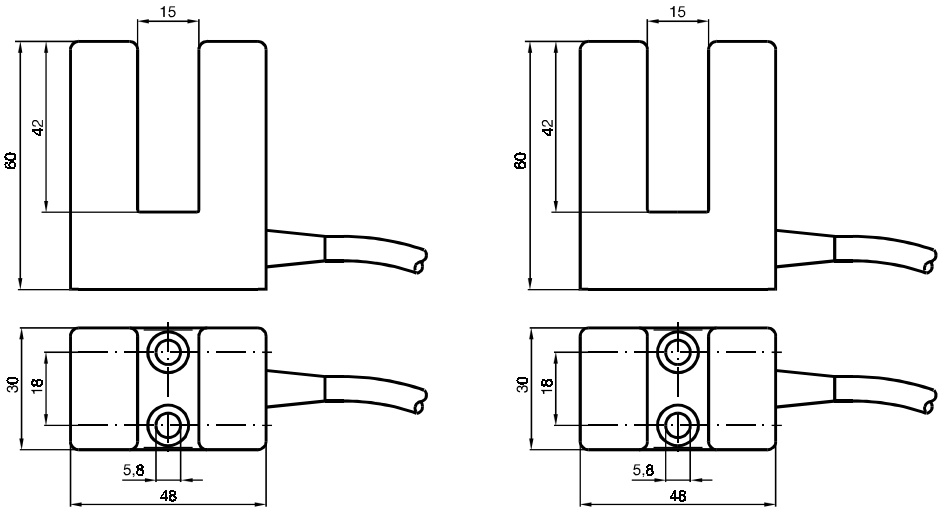

Slot width		15 mm	15 mm	15 mm	
PNP	Make function	SJ15-E2			
NPN	Break function	SJ15-E			
PNP	Antivalent		SJ15-A2		
NPN	Antivalent		SJ15-A		
AC	Make function			SJ15-WS	
	Break function			SJ15-WÖ	
Entry depth	[mm]	17 ...19	17 ...20	18,5 ...20,5	
Operating voltage U_B	[V]	10 ...30	10 ...30	20 ...250	
Operational current I_L	[mA]	200	200	500	
Switching frequency	[Hz]	500	500	25	
No-load supply current	[mA]	20	20	-	
Off-state current I_R	[µA]	-	-	2,5	
Short time c. 20ms,0,1Hz	[mA]			4000	
Voltage drop	[V]	3	3		
Short circuit protection		pulsing	pulsing	-	
Reverse polarity protection		yes	yes	-	
Output indicator		-	-	-	
Operating temperature	[°C]	-25 ...70	-25 ...70	-25 ...70	
EMC to		EN 60947-5-2	EN 60947-5-2	EN 60947-5-2	
Protection to DIN 40050		IP 67	IP 67	IP 67	
Connection		2 m, PVC-cable	2 m, PVC-cable	2 m, PVC-cable	
Conductor cross section		0,75 mm²	0,75 mm²	0,75 mm²	
Housing material		PBT	PBT	PBT	

Standard symbol / connection:

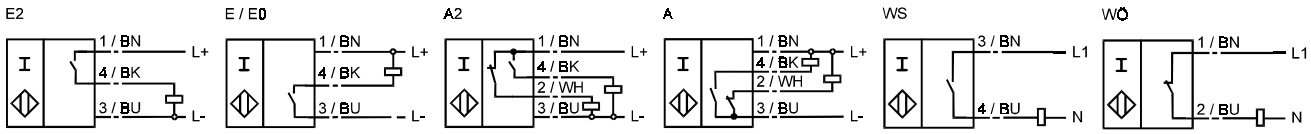

Inductive sensors

Subject to reasonable modifications due to technical advances. Copyright by Pepperl+Fuchs, Printed in Germany