Inductive proximity switches

NBB5-F33-E0

Basic series

5 mm embeddable

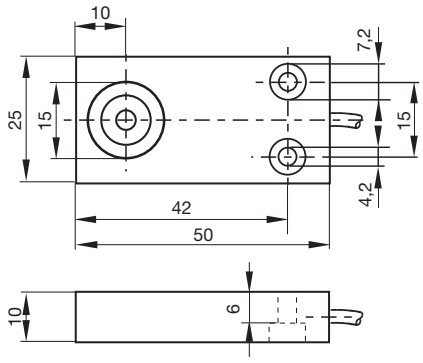

CE

Switching element function	NPN Make function
Rated operating distance s_n	5 mm
Installation	embeddable
Assured operating distance s_a	0 ... 4,05 mm
Reduction factor r_{Al}	0,3
Reduction factor r_{Cu}	0,2
Reduction factor r_{V2A}	0,6
Operating voltage U_B	10 ... 30 V
Switching frequency f	0 ... 500 Hz
Hysteresis H	typ. 5 %
Reverse polarity protection	yes
Short circuit protection	pulsing
Voltage drop U_d	≤ 3 V
Operating current I_L	0 ... 200 mA
Off-state current I_r	0 ... 0,5 mA typ.
No-load supply current I_0	≤ 15 mA
Standards	EN 60947-5-2
Ambient temperature	-25 ... 70 °C (248 ... 343 K)
Connection type	2 m, PVC cable
Core cross-section	0.34 mm²
Housing material	PBT
Sensing face	PBT
Protection degree	IP67

Connection_type:

E / E0

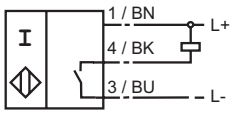

www.pepperl-fuchs.com
PEPPERL+FUCHS GmbH

084619_ENG.xml
2003-03-25

Subject to reasonable modifications due to technical advances.
Copyright Pepperl+Fuchs, Printed in Germany