A9406333

SHELL-TYPE CASES V 110, Vers. I

Two-part plastic case with open front. Front panel (as accessory) can be inserted into the front guide grooves. Guide ridges and fastening pillars for mounting of PCBs in top and base.

Version
Without battery compartment

Supply
1 top and base part, assembly kit



TECHNICAL DATA

Material	ABS (UL 94 HB)
Colour	off-white RAL 9002
Standards	RoHS compliant, REACH compliant

Width	72 mm
Depth	114 mm
Height	33 mm
PCB length, base	99 mm
PCB width, base	54 mm
PCB length, top	99 mm
PCB width, top	54 mm

Please take the dimensions from current parts. These are subject to material- and manufacturing-specific tolerances.

PURCHASING DATA

Weight/1 part	72 g
Customs tariff number (OKW product)	39269097
Country of manufacture	Germany

A9406333

SHELL-TYPE CASES V 110, Vers. I

CUSTOMISING OPTIONS

What else do you need to create your own personal product? We can supply our enclosures and tuning knobs fully modified to suit your electronic components and design requirements. Please advise for anything else we can do for you.

Customising options for A9406333


Machining


Lacquering



Printing



Laser marking


Special material


EMC shielding


Installation / Assembly of accessories

A9406333

SHELL-TYPE CASES V 110, Vers. I

ACCESSORY TO COMPLETE



A9106113
Front / rear panel V 110
Acrylic glass
red transparent
59.3x25x1mm



A9107111
Front / rear panel V 110
Aluminium
matt anodised
59.3x25x1mm

ACCESSORY "PROTECTION"

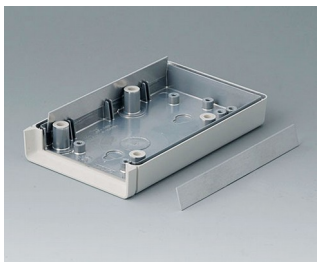

A9106095
Contact-strips V, G 110
Aluminium

ACCESSORY "WALL/HOLDER"



A9204108
Wall mounting brackets
PA 6
pebble grey RAL 7032

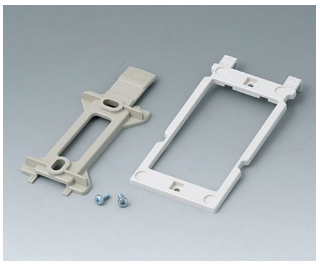

B1350048
Wall suspension elements
ABS (UL 94 HB)
pebble grey RAL 7032

A9406333

SHELL-TYPE CASES V 110, Vers. I

ACCESSORY "CARRYING"



A9100002
Ring eyelet
PA 6
volcano



A9172107
Belt/Pocket clip
ABS (UL 94 HB)
off-white RAL 9002
62x30mm

ACCESSORY "SCREWS"



A0306031
Self-tapping screws 3 x 6 mm
(PZ1)

ACCESSORY



A9207150
Anti-slide feet 6.5 x 2 mm
transparent



A9250807
Tilt foot bar
ABS (UL 94 HB)
off-white RAL 9002



A9250817
Tilt foot bar
ABS (UL 94 HB)
off-white RAL 9002

Subject to technical modification without notice. © by OKW Gehäusesysteme, Buchen/Germany.

max. Platinengröße: Oberteil 54 x 99 mm, Unterteil ohne Batteriefach 54 x 99 mm (Domaussparrung unberücksichtigt)
max. size of PCB: top part 54 x 99 mm, base part without battery compartment 54 x 99 mm (cutouts for pillars not taken into consideration)

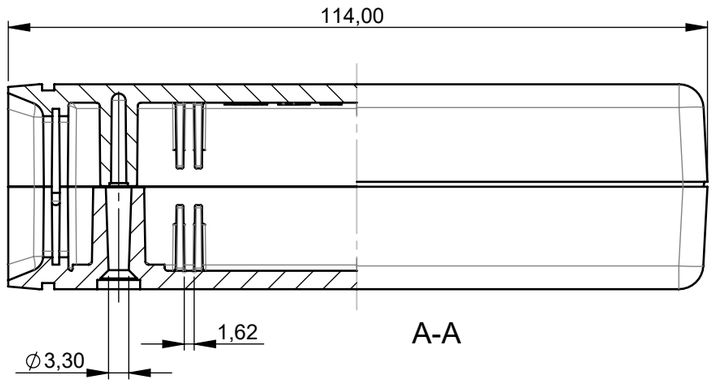

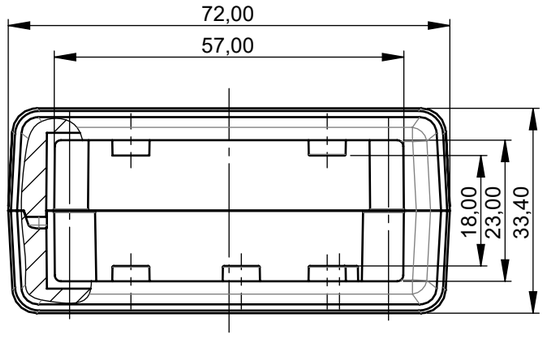

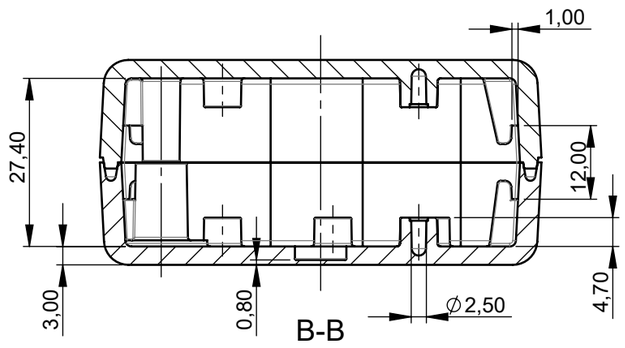

Oberteil
top part

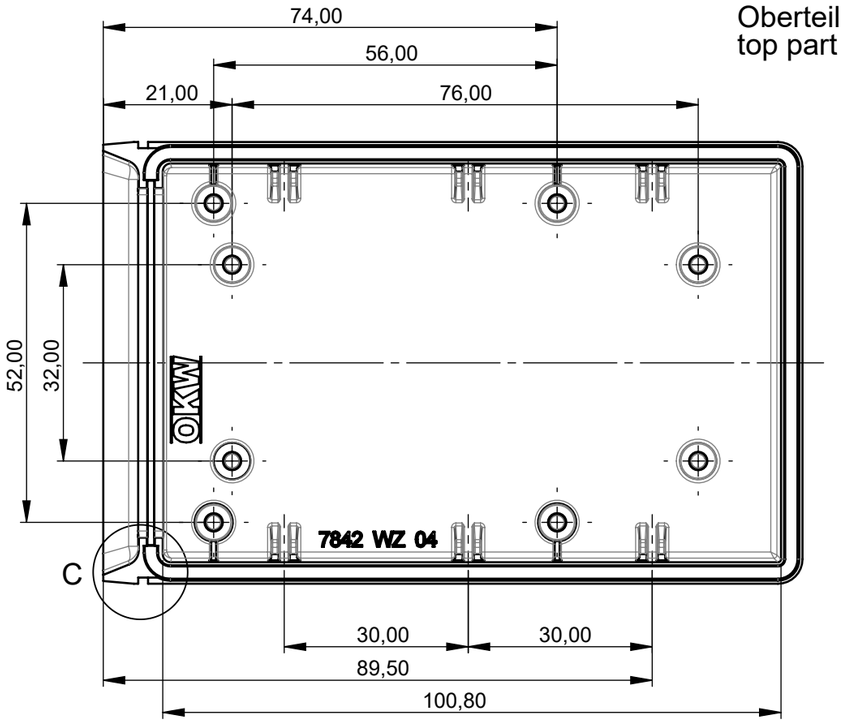

Unterteil
base part

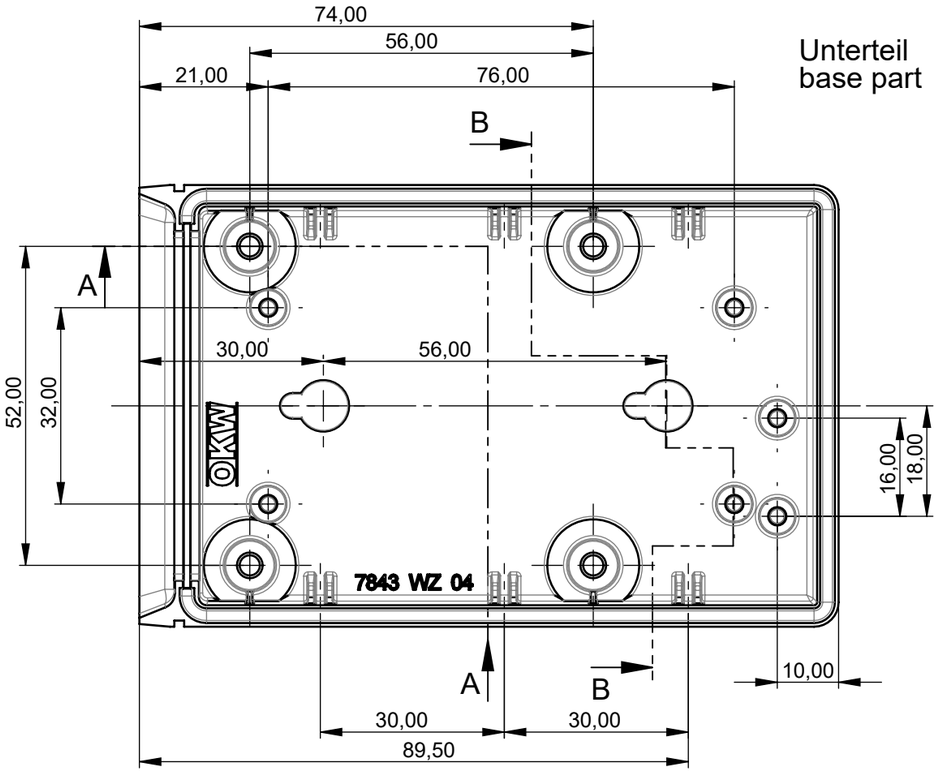

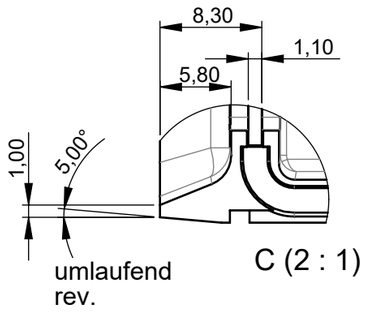

Z (PZ1)

Bitte die Maße an aktuellen Teilen abnehmen.
Diese unterliegen material- und produktionsspezifischen Fertigungstoleranzen.

Please take the dimensions from current parts.
These are subject to material- and manufacturing-specific tolerances.

Informationskopie
wird nicht aktualisiert
Copy for Information
will not be updated

Technische Änderungen vorbehalten. Irrtümer oder Druckfehler begründen keinen Anspruch auf Schadenersatz. Wichtige Einbaumaße bitte direkt mit dem aktuellen Produkt abstimmen.

Subject to technical modification without prior notice. Typographical and other errors do not justify any claim for damages. All dimensions should be verified using an actual moulded part.

Sous reserve de modifications techniques. Toute erreur ou faute d'impression ne justifie aucune demande d'indemnisation. Nous prions les clients de verifer les dimensions des composants avec les boitiers avant le montage.

Erst. am:	19.05.2020	Toleranzen:	Status:
Erst. von:	D. Hasselbach	DIN 16901 T130	ENTWICKLUNG
Freig. am:		Volumen:	Zeichnungsart:
Freig. von:			KUNDE
Revision:	01		DIN 6 Teil 2

This document contains proprietary information of OKW Gehäusesysteme GmbH and is tendered subject to the conditions that the information be retained in confidence not be reproduced or copied and not be used or incorporated in any product.

OKW GEHÄUSE SYSTEME

SCHALENGEHAEUSE
SG 110, Vers. I, flat / flat

A9406333 | M 1:1

Für dieses Dokument behalten wir uns alle Urheberrechte vor. Es darf auch auszugsweise weder vervielfältigt noch Dritten in irgendeiner Form zugänglich gemacht werden.

Dateiname: 00008469