Thermo Electric Devices

PRODUCT DATA SHEET

THP33B

INTEGRATED HEATPUMP ASSEMBLY

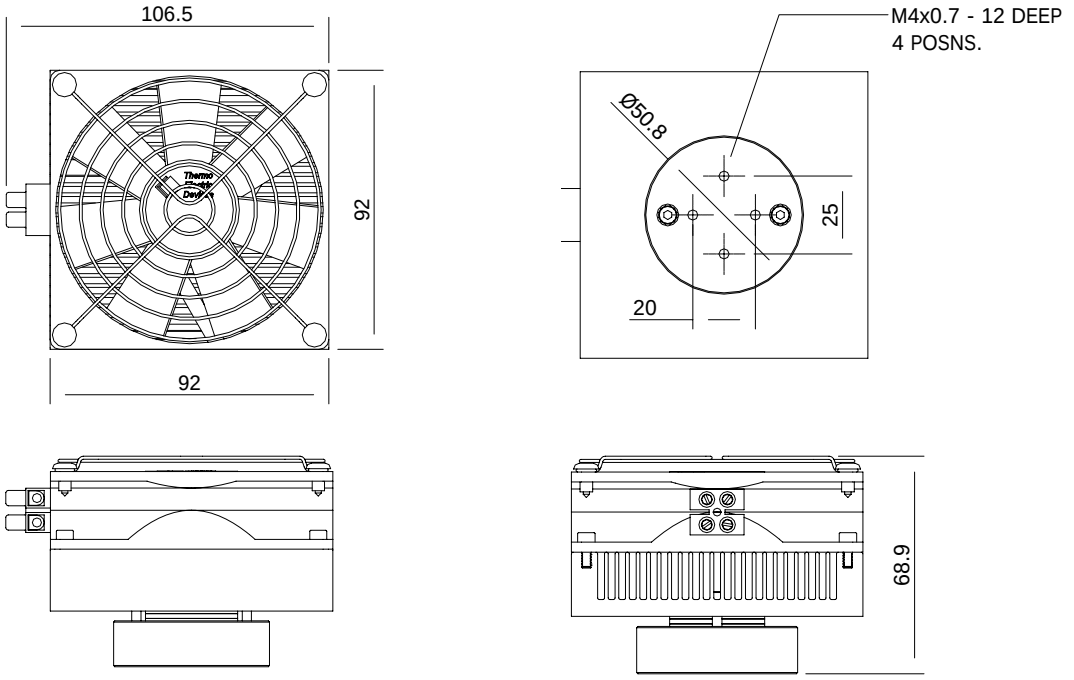

Description:

The THP33B is a high performance air to plate heat pump assembly using a single 30mm 33W TEC, with a forced convection extruded aluminium heat exchanger.

Applications include discrete temperature control of thermally sensitive components or samples. With a bi-polar controller it can be used to both heat or to cool.

It is supplied with the TEC and fan wired in parallel, however the removal of a jumper allows the fan and TEC to be controlled independently.

Dimensions (max):

Hot side	107mm x 92mm x 70mm
Cold block	50.8mm dia x 15mm
Mass	505g

Thermo Electric Devices reserve the right to change specification without notice.

Electrical:

V range	6 -12VDC
I max	4.0A

Thermal:

Delta t max: (ambient to cold block)	50 deg C
Heat pumping (cooling): Max @ delta t = 0	25W
Typical @ delta t = 25 (12V)	14W
Heat pumping (heating): Max @ delta t = 0	60W

Environmental:

Operating temperature: -20 to +50 deg C

IP20

THP33 Performance Graph (25 deg C)

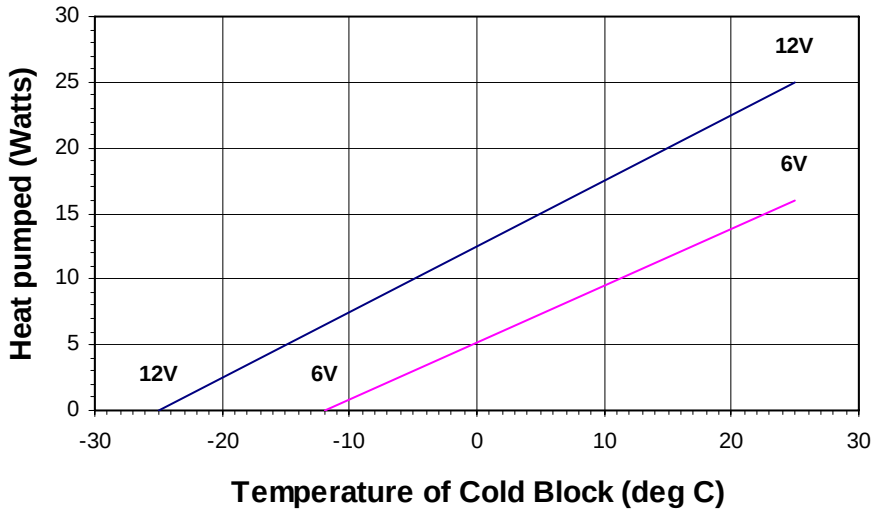

Thermo Electric Devices
Unit 1 Draycott Business Centre
Draycott
GL56 9JY
UK

T: 01386 701703
F: 01386 701618
E: mail@thermoelectricdevices.co.uk
W: www.thermoelectricdevices.co.uk

Thermo Electric Devices reserve the right to change specification without notice.