PRODUCT DATASHEET

M SERIES



ELECTRIC**MOTOR**

DATE 19.06.2025
CUSTOMER RS Group
APPLICATION TSP-SL112M4 4 230/400-50 B14 MV English

MOTOVARIO®
HEART OF MOTION
a TECO Group company

CONFIGURATION

PRODUCT DATASHEET

CHARACTERISTIC	VALUE
Supplier	Motovario
Regulations	CE
Motor	Three-Phase
Size	112
Series	IE4 Super Prem.Eff.-Self Power
Poles	4
Electrical Execution	Std (Voltage Tolerance +/- 10%)
Winding	D/Y (6 Std Term.)
Service	S1
Voltage	230/400-265/460 V
Frequency	50-60 Hz
Power	4 kW
Cooling	Self-Ventilated
Mounting Arrangements	B14
Flange Dim.	Ø160
Shaft Dim. (DE)	Ø28x60
Rear Shaft End (NDE)	No
Insulation Rating	F
Protection Rating	IP55
Connection	No
Winding Separators	Yes
Thermal Protectors	No
Ambient Conditions	Standard
Heaters	No
Condensation Drainage	No
Devices	No
Accessories	None
Terminal Box Cover	Aluminium
Cable Glands \ Plugs	Plastic
Fan	Plastic
Fan Cover	Standard
MO-Bearings	2Z Ball Bearings
MO-Oil Seal	NBR-Nitrile
Logo	Motovario
MO-Notes	No
Paint	Not Painted
Commercial Offer Default	Yes

DRAWINGS

Values expressed in [mm]

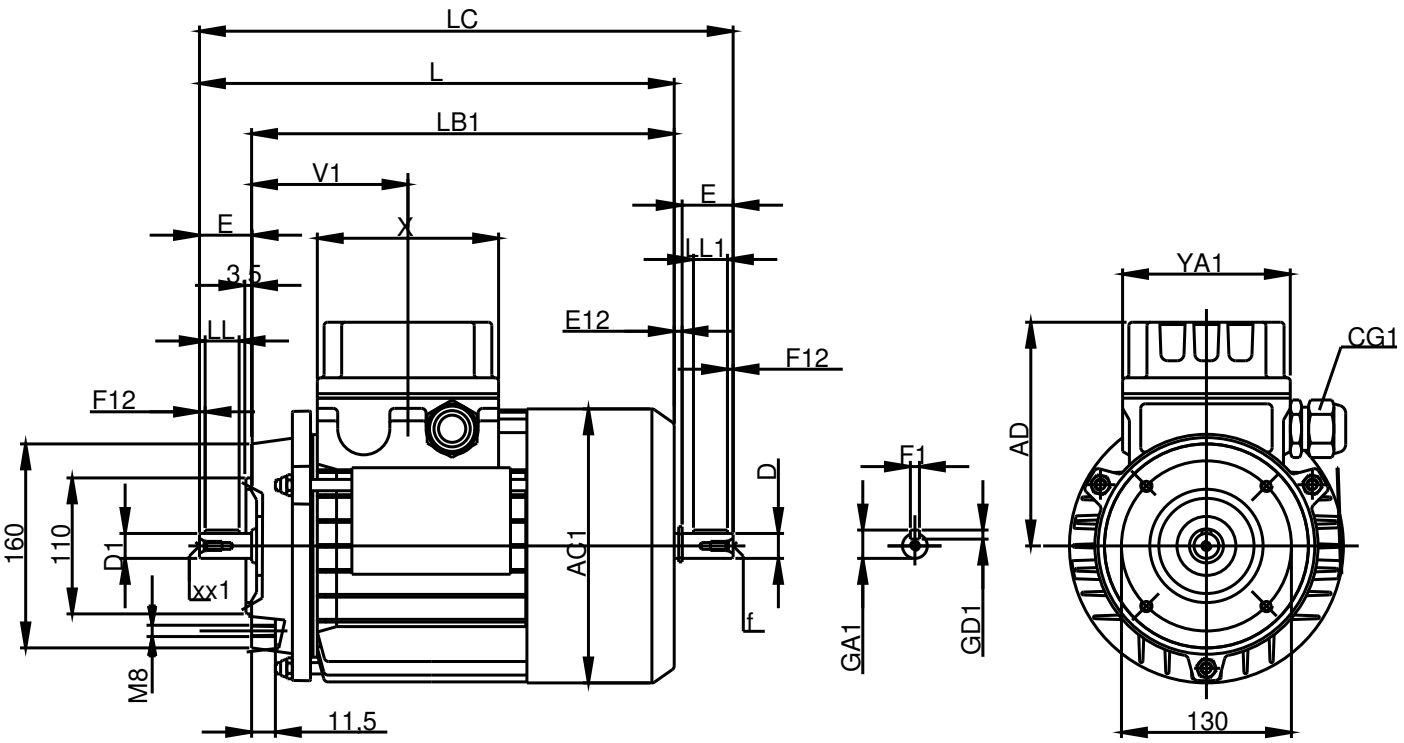

MOUNTING POSITIONS

Mounting position: specific construction in relation to the mounting equipment, type of bearings and shaft end.
Installation type: positioning of the motor in relation to the axis line (horizontal or vertical) and mounting equipment.
The table lists the most common installation methods in relation to the mounting position.
With reference to standard IEC 60034-7, the electric motor's nameplate must be marked with the mounting position (IMB3, IMB5, IMB14, IMB34, IMB35) independently of the installation type.

IMB3	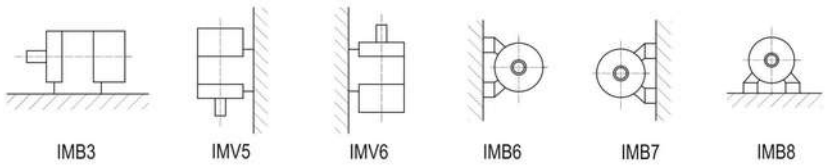
IMB5	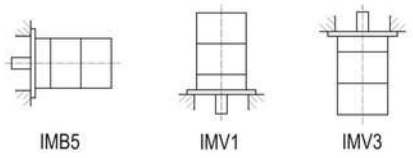
IMB14	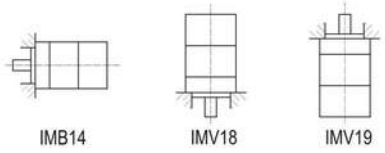
IMB35	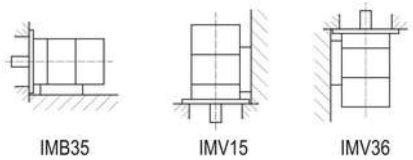
IMB34	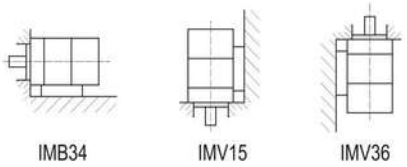

Mounting position:

- IMB3 with feet
- IMB5 with drive side flange, through holes
- IMB14 with drive side flange, threaded holes
- IMB35 with feet and drive side flange, through holes
- IMB34 with feet and drive side flange, threaded holes

Besides being available in the above-indicated standardised mounting positions, motors are available also in compact versions; this applies to both aluminium CHA and CBA gear reducers (B10 mounting position) and to cast iron CH, CB and CS gear reducers (B11 mounting position). These mounting positions require special flanges integral with the gear reducer and cable output shaft where pinion is fitted before the reduction stage. The resulting gearmotor has reduced axial size. For further details, including dimensional drawings, refer to the specific catalogues of the gear reducers.