DATASHEET - M22-FLED-RGB



LED element, Flat Rear, red/green/blue, front mounting

Part no.	**M22-FLED-RGB**
Catalog No.	**180800**
Alternate Catalog No.	**M22-FLED-RGB**
EL-Nummer (Norway)	**4315751**

Delivery program

Basic function accessories			LED elements
Description			Cage Clamp is a registered trademark of Wago Kontakttechnik GmbH/Minden, Germany
Connection technique			Cage Clamp, Push-in
Fixing			Front fixing
Rated operational voltage	U_e	V	24 V DC
Rated operational current	I_e	mA	8 - 15
Power consumption	$P_{max.}$	W	0.36
Lifespan to EN 60064 at t_a = +25 °C	t_{mean} (AC)	h	100000
Degree of Protection			IP20
			at 24 V
Colour			
			red/green/blue
			
Connection to SmartWire-DT			no
Approval			
Connection technique			Cage Clamp, Push-in

Notes

For indicator lights, illuminated pushbutton actuators, and illuminated selector switch actuators, the following applies: Only in combination with M22-…-W

Terminal diagram:

	Colors	**Pin**			
		X1	X2	X3	X4
		+R	+G	+B	GND
M22-FLED-RG	red	x			x
	green		x		x
	yellow	x	x		x
M22-FLED-RGB	red	x			x
	green		x		x
	yellow	x	x		x
	White	x	x	x	x
	blue			x	x
	Violet	x		x	x
	Turquoise		x	x	x

Technical data

General

Standards			IEC 60947-5-1
Degree of Protection			IP20
Climatic proofing			Damp heat, constant, to IEC 60068-2-78 Damp heat, cyclic, to IEC 60068-2-30 Dry heat to IEC 60068-2-2
Ambient temperature			
Open		°C	-25 - +70
Storage		°C	- 40 - + 85
Mounting position			As required
Mechanical shock resistance according to IEC 60068-2-27 Shock duration 11 ms, half-sinusoidal		g	> 50
Terminal capacities		mm^2	
Solid		mm^2	1 x 1 (0.2 - 1.5) 1 x 1 (075 - 1.5) Can be plugged without tools
Stranded		mm^2	1 x 1 (0.2 - 1.5)
Flexible with ferrule		mm^2	1 x 1 (0.25 - 1) Use WAGO Variocrimp 4 crimping tool; please enquire for others
Solid or stranded		AWG	20

Contacts

Rated impulse withstand voltage	U_{imp}	V AC	4000
Rated insulation voltage	U_i	V	250
Overvoltage category/pollution degree			III/3
Indoor and protected outdoor installation			

Design verification as per IEC/EN 61439

Technical data for design verification			
Operating ambient temperature min.		°C	-25
Operating ambient temperature max.		°C	70

Technical data ETIM 8.0

Low-voltage industrial components (EG000017) / Lamp holder block for control circuit devices (EC000204)

Electric engineering, automation, process control engineering / Low-voltage switch technology / Command and alarm device / Bulb socket block for command and alarm devices (ecl@ss10.0.1-27-37-12-09 [AKF027014])

Transformer integrated			No
With integrated voltage decreasing resistor			No
With light source			Yes
With integrated diode			Yes
Lamp holder			None
Rated voltage Ue at AC 50 Hz		V	0 - 0
Rated voltage Ue at AC 60 Hz		V	0 - 0
Rated voltage Ue at DC		V	24 - 24
Voltage type for actuating			DC
Lamp type			LED
Connection type auxiliary circuit			Spring clamp connection
Colour lamp			Multi-coloured
Type of fastening			Front fastening

Approvals

Product Standards			IEC/EN 60947-5; UL 508; CSA-C22.2 No. 14-05; CSA-C22.2 No. 94-91; CE marking
UL File No.			E29184
UL Category Control No.			NKCR
CSA File No.			012528
CSA Class No.			3211-03
North America Certification			UL listed, CSA certified
Degree of Protection			UL/CSA Type: -

Dimensions

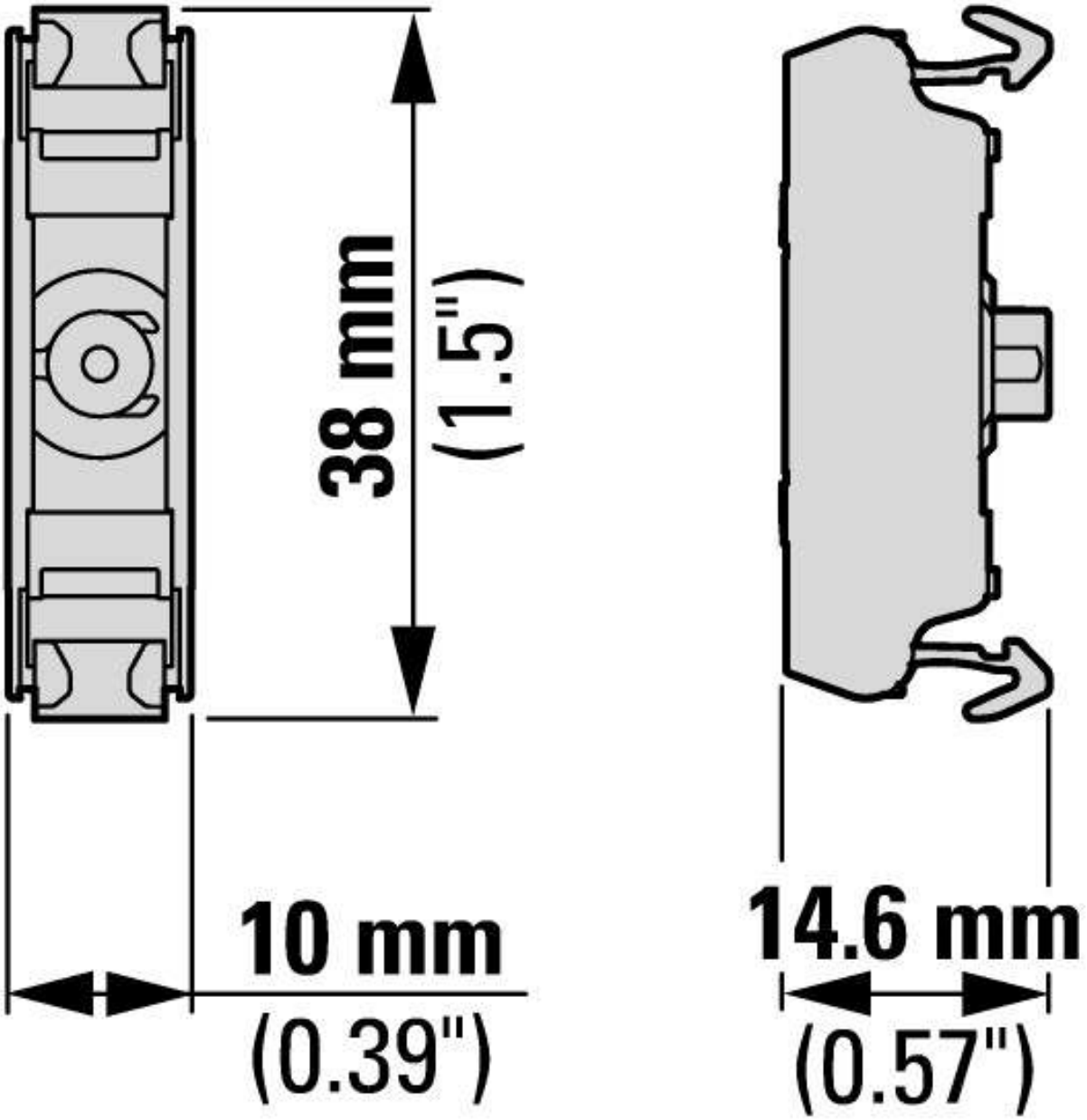

Additional product information (links)

IL04716002Z (AWA1160-1745) RMQ-Titan System	
IL04716002Z (AWA1160-1745) RMQ-Titan System	https://es-assets.eaton.com/DOCUMENTATION/AWA_INSTRUCTIONS/IL04716002Z2021_07.pdf

© 07/2022 by Eaton Industries GmbH