LHT C

Product no.: T0054445599

Benefits

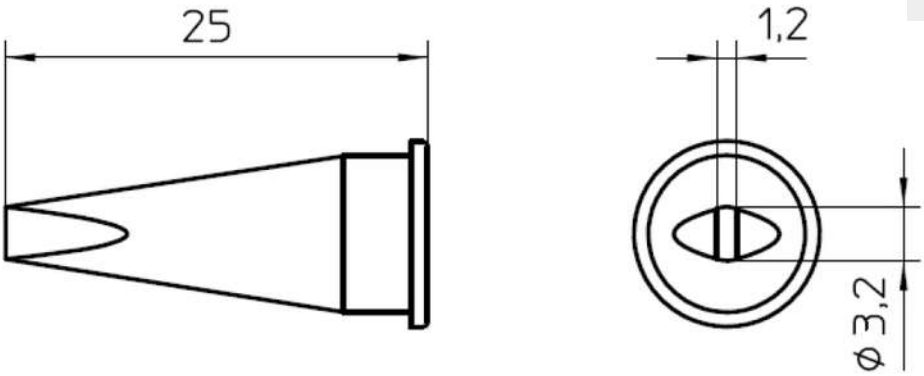

For this purpose, we recommend:



Solder fume extractors



Cleaning



Soldering irons



Zubehoer

Technical Data

Tip shape	Chisel shape
Tip type	HM
Width in mm	3.2
Width in inches	0.126
Thickness in mm	1.2
Thickness in inches	0.05
Length mm	25
Length inches	0.984
Power	---
Packaging unit	1

Owning the bench



PROFESSIONAL



FILTRATION



EREM



XCELITE

Weller Tools GmbH
Carl-Benz-Straße 2
74354 Besigheim
Germany

Phone: +49 (0) 7143 / 580-0
Fax.: +49 (0) 7143 / 580-108
Email: info@weller-tools.com
Web: www.weller-tools.com