ASCO™ Solenoid Valves

Pilot Operated, Hung Diaphragm | 3/8" to 1 1/2"

2/2 Series 210

Features and Benefits

- *Two way shut-off valves for the control air, inert gas, water, oil and other gases/liquids compatible with the sealing material used*
- *Valves do not require a minimum operating pressure*
- *All products are covered by Pressure Equipment Directive 2014/68/EU and are suitable for group 1 and 2 fluids*
- *The solenoid valves satisfy all relevant EU directives*



General

Differential pressure	See «SPECIFICATIONS» [1 bar =100 kPa]
Maximum viscosity	65 cSt (mm^2/s)
Response time	15 - 120 ms

Fluids (∗)	Temperature range (TS)	Seal materials (∗)
air, inert gas, water, oil	-20°C to +85°C	NBR (nitrile)

Materials of components in contact with fluid

(∗) Ensure that compatibility of materials in contact with fluids is verified.

	Brass body	Stainless steel body
Body	Brass	AISI 304 SS
Core tube	Stainless steel	Stainless steel
Core and plugnut	Stainless steel	Stainless steel
Springs	Stainless steel	Stainless steel
Seat	Brass	Stainless steel
Seals, diaphragm and disc	NBR	NBR
Disc holder (NO function)	PA	PA
Shading coil	Copper	Silver

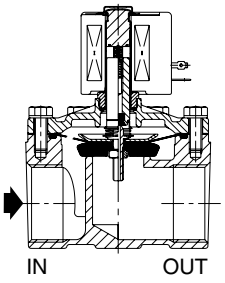

NC function

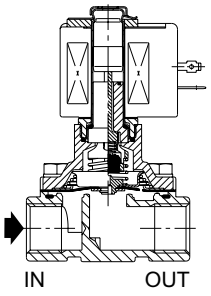

NO function

Electrical characteristics

Coil insulation class	F or H
Connector	Spade plug (cable Ø 6-10 mm)
Connector specification	ISO 4400 / EN 175301-803, form A
Electrical safety	IEC 335
Electrical enclosure protection	Moulded IP65 (EN 60529)
Standard voltages	DC (=) : 24V - 48V
(Other voltages and 60 Hz on request)	AC (~) : 24V - 48V - 115V - 230V / 50 Hz

Prefix option	Power ratings				Operator ambient temperature range (TS) [1]	Replacement coil		Type [1]
	Inrush ~	Holding ~		Hot/cold =		~	=	
	(VA)	(VA)	(W)	(W)	(°C)	230 V/50 Hz	24 V DC	
SC	55	23	10.5	-	-20 to +75	400425-117	-	01
	78	35	16.7	-	-20 to +50	400425-217	-	01
	110	33.6	15.4	12/16.8	-20 to +75	400525-117	400625-142	02
	240	43	20	16.8/23	-20 to +50	400525-217	400625-242	02

[1] For dimensions, see drawing(s) for each construction type on the following page(s).

Specifications

Pipe size	Orifice size	Flow coefficient Kv		Operating pressure differential (bar)							Power coil (W)		Catalog number		Options			
				Min.	Max. (PS)										Maintained manual operator	FPM	EPDM	CR
					Air (∗)		Water (∗)		Oil (∗)				Brass	Stainless steel				
	(mm)	(m^3/h)	(l/min)		~	=	~	=	~	=	~	=						
NC - Normally closed																		
Rp 3/8"	16	2.6	43	0	16	16	16	16	-	-	10.5	16.8	**SCE210C493**[2]	-	MO	V	E	J
Rp 1/2"	16	3.4	57	0	16	16	16	16	-	-	10.5	16.8	**SCE210C494**[2]	-	MO	V	E	J
					16	16	16	16	16	-	16.7	16.8	-	**SCE210C487**[2]	MO	V	E	J
Rp 3/4"	19	4.3	72	0	16	16	16	16	-	-	10.5	16.8	**SCE210D495**[2]	-	MO	V	E	J
	16	3.9	65	0	16	16	16	16	16	-	16.7	16.8	-	**SCE210C488**[2]	MO	V	E	J
Rp 1"	25	9.6	160	0	16	16	16	16	16	10	15.4	23	**SCE210B454**[3]	-	MO	V	E	J
													-	**SCE210D489**[3]	-	V	E	J
Rp 1 1/4"	28	12.8	213	0	9	6	9	6	9	4	15.4	23	**SCE210B155**[3]	-	MO	V	E	J
Rp 1 1/2"	32	19.3	322	0	9	5	9	5	9	3	15.4	23	**SCE210B156**[3]	-	MO	V	E	J

[2] Max. operator ambient temperature (TS) 60°C, DC only

[3] Mounting position, DC only: piping horizontal, solenoid upright.

00040GB-2024/R01
Availability, design and specifications are subject to change without notice. All rights reserved.

Specifications

Pipe size	Orifice size	Flow coefficient Kv		Operating pressure differential (bar)							Power coil (W)		Catalog number		Options			
				Min.	Max. (PS)										Maintained manual operator	FPM	EPDM	CR
					Air (✶)		Water (✶)		Oil (✶)				Brass	Stainless steel				
	(mm)	(m^3/h)	(l/min)		~	=	~	=	~	=	~	=						
NO - Normally open																		
Rp 3/8"	16	2.6	43	0	16	16	16	16	16	10	10.5	23	**SCE210C433**	-	-	V	E	J
Rp 1/2"	16	3.4	57	0	16	16	16	16	16	10	10.5	23	**SCE210C434**	-	-	V	E	J
		2.6	43	0	16	16	16	16	10	10	10.5	23	-	**SCE210B430**	-	V	E	J
Rp 3/4"	19	4.7	79	0	16	16	16	16	16	10	10.5	23	**SCE210C435**	-	-	V	E	J
	16	2.6	43	0	16	16	16	16	10	10	10.5	23	-	**SCE210B438**	-	V	E	J
Rp 1"	25	11.2	185	0	16	-	16	-	16	-	20	-	**SCE210B457** (1)	-	-	V	E	J
Rp 1 1/4"	28	12.8	213	0	9	-	9	-	9	-	20	-	**SCE210B058** (1)	-	-	V	E	J
Rp 1 1/2"	32	19.3	322	0	9	-	9	-	9	-	20	-	**SCE210B059** (1)	-	-	V	E	J

(✶) Ensure that compatibility of materials in contact with fluids is verified.
(1) Mounting position: piping horizontal, solenoid upright.

Options

- Valves can also be supplied with FPM (fluoroelastomer), EPDM (ethylene-propylene) and CR (chloroprene) diaphragms,seals and discs. Use the appropriate optional suffix letter for identification
- Waterproof enclosure with embedded screw terminal coil according to protection class IP67, CEE-10
- Explosionproof enclosures for use in zones 1/21-2/22, categories 2-3 to ATEX Directive 2014/34/EU
- Electrical enclosures according to "NEMA" standards are available
- Compliance with "UL", "CSA" and other local approvals available on request
- Mounting brackets for brass bodied valves, suffix MB (Except pipe size Rp 1, 1 1/4 and 1 1/2)
- For protection against corrosion caused by the environment or the fluid, contact us
- Other pipe connections are available on request. Pipe identifier 8 = NPT
- Connector with visual indication and peak voltage suppression or with cable length of 2 m

Installation

- The solenoid valves can be mounted in any position without affecting operation, unless indicated otherwise in the specifications table.
- Stainless steel valves are standard supplied with mounting brackets
- Pipe connection is E = Rp (ISO 7/1)
- Installation/maintenance instructions are included with each valve

Spare parts kit and accessories

Catalog number	Spare parts kits no.		Mounting bracket
	~	=	
SCE210C493/C494	**C302272**	**C326540**	**038713**
SCE210D495	**C302276**	**C326541**	**038713**
SCE210B454	**C302283**	**C326542**	**-**
SCE210B155	**C302283**	**C133801**	**-**
SCE210B156	**C302286**	**C133802**	**-**
SCE210C433/C434	**C326551**	**C326543**	**038713**
SCE210C435	**C326552**	**C326544**	**038713**
SCE210B457	**C302337**	**-**	**-**
SCE210B058	**C302339**	**-**	**-**
SCE210B059	**C302340**	**-**	**-**
SCE210C487/C488	**C302328**	**C326548**	**standard**
SCE210B430/B438	**C326553**	**C326550**	**standard**
SCE210D489	**C302329**	**C326549**	**-**

- Not available

Ordering Examples Valves:

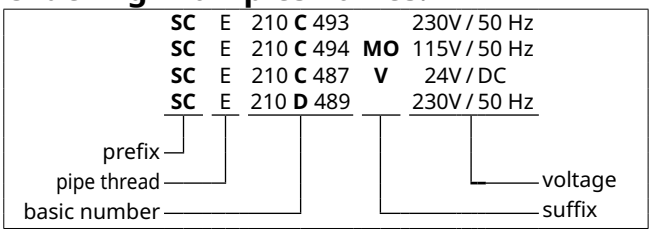

Ordering Examples Kits:

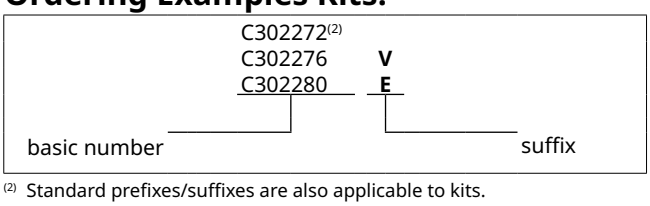

(2) Standard prefixes/suffixes are also applicable to kits.

00040GB-2024/R01
Availability, design and specifications are subject to change without notice. All rights reserved.

Dimensions (mm), **Weight** (kg)

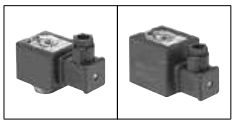

TYPE 01-02
Prefix "SC" Solenoid
Epoxy moulded
IEC 335 / ISO 4400
IP65

Type 01: SCE210C493/C494/D495 (AC)
SCE210C487/C488 (AC)
Type 02: SCE210C493/C494/D495/C487/C488 (DC)
SCE210D489/B454/B155 (AC/DC)

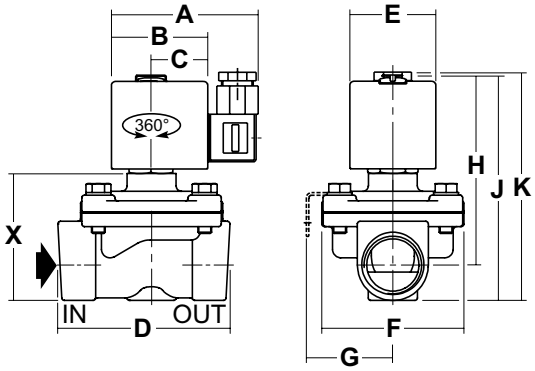

Type 02: SCE210B156 (AC/DC)

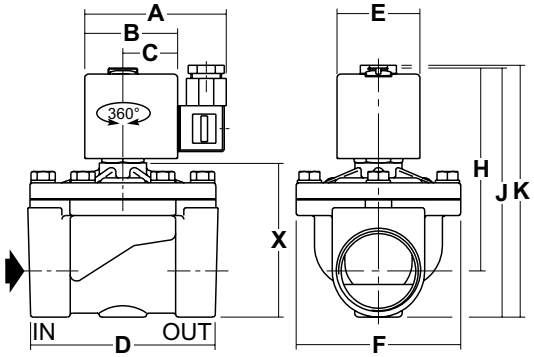

Type 01: SCE210C433/C434/C435 (AC)SCE210B430/B438 (AC)
Type 02: SCE210B457/B058/B059 (AC/DC)SCE210C433/C434/C435 (DC)

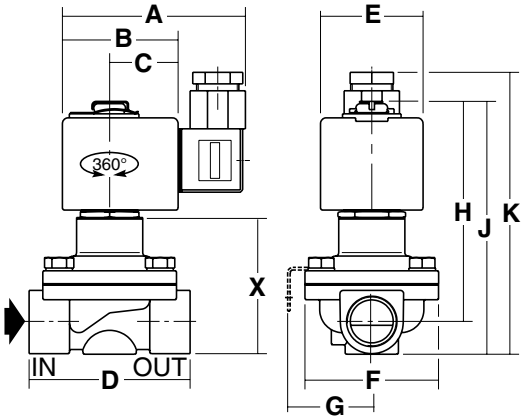

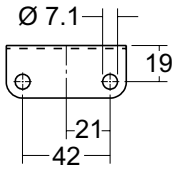

Mounting brackets for valves: (0.3 kg)
SCE210C493/C494/D495
SCE210C487/C488/D489
SCE210C433/C434/C435

Type	Prefix option	Catalog number	A	B	C	D	E	F	G	H	J	K	X	Weight [1]
01	SC	SCE210C493/C494	86	51	30	70	45	58	41	83	98	112	46	0.9
		SCE210D495	86	51	30	71	45	58	41	87	105	119	54	1.0
		SCE210C487/C488	86	51	30	71	45	58	41	87	105	119	55	1.0
		SCE210C433/C434	86	51	30	70	45	58	41	95	109	120	60	0.9
		SCE210C435	86	51	30	71	45	58	41	99	117	127	68	1.0
		SCE210B430/B438	86	51	30	71	45	58	41	98	116	127	67	1.0
02	SC	SCE210C493/C494	91	56	33	70	50	58	41	93	107	104	46	1.0
		SCE210D495	91	56	33	71	50	58	41	97	115	111	54	1.1
		SCE210C487/C488	91	56	33	71	50	58	41	97	116	112	55	1.1
		SCE210D489	91	56	33	95	50	98	41	112	134	134	75	2.2
		SCE210C433/C434	91	56	33	70	50	58	41	101	116	112	60	1.1
		SCE210C435	91	56	33	71	50	58	41	105	123	119	68	1.2
		SCE210B430/B438	91	56	33	71	50	58	41	105	123	119	67	1.1
		SCE210B454	91	56	33	95	50	83	-	114	134	131	75	2.0
		SCE210B457	91	56	33	95	50	83	-	155	176	160	98	2.1
		SCE210B155	86	56	33	95	50	83	-	112	143	148	86	2.0
		SCE210B156	86	56	33	111	50	99	-	125	153	158	96	2.8
		SCE210B058	86	56	33	95	50	83	-	161	187	187	130	2.0
		SCE210B059	86	56	33	111	50	99	-	167	194	194	137	2.5

[1] Incl. coil(s) and connector(s)

00040GB-2024/R01
Availability, design and specifications are subject to change without notice. All rights reserved.