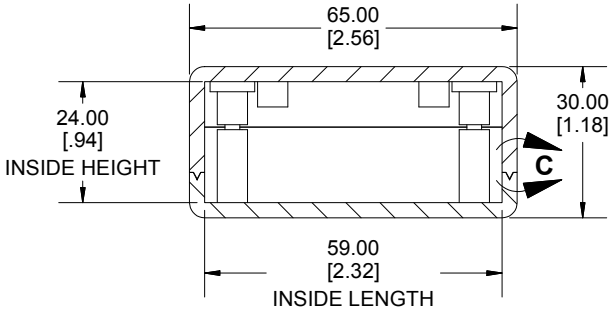


**SECTION A-A**
**SIDE VIEW**

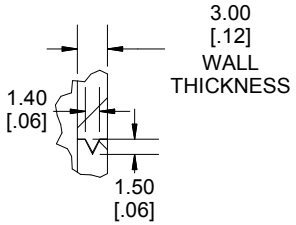


**DETAIL C**
**GROOVE**

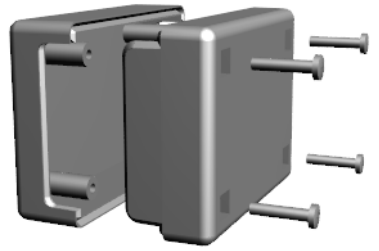

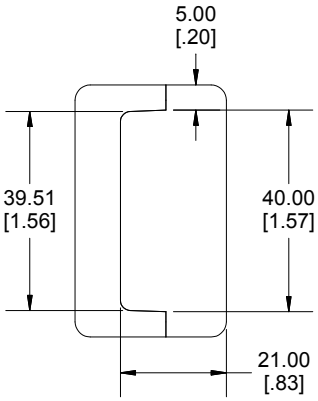


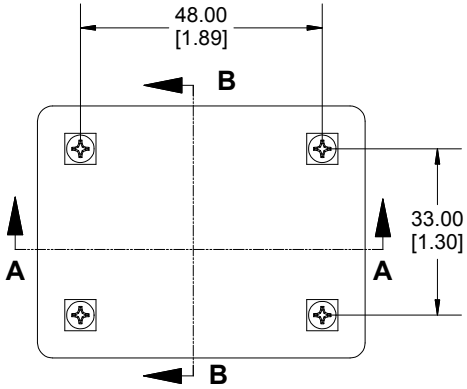


**SECTION B-B**
**END VIEW**

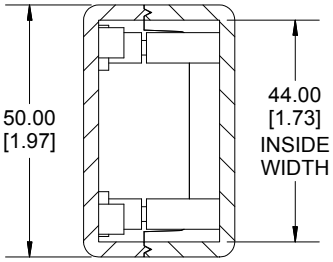


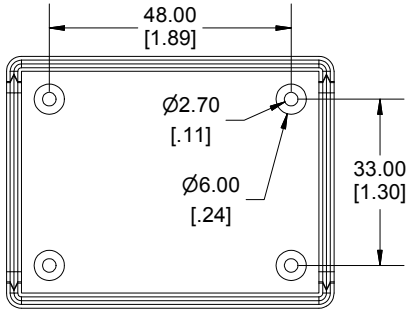


**LID**

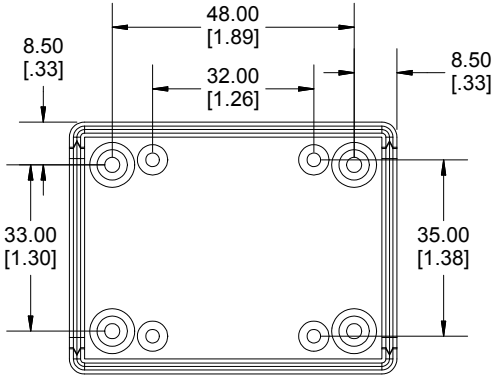


**BOX**

**Dimensions:**
mm
[inches]

Enclosures can be Factory Modified ( Milling, Drilling, Printing etc.)
Contact Factory mjm@hammondmfg.com for quotes
Solid models of this enclosure available in STEP or IGES.

| NOTE |
| --- |
| Purchased assembly includes box, lid,4 cover screws, and 4 P.C. board screws. |
| **Recommended Cover Screw Torque -- 2.5 lbf-in (30 cN-m)** |

| MB6550 | |
| --- | --- |
| MB6550 RegularEnclosure | |
| Lid smooth light gray (RAL 7035) | MB655030 |
| Bottom smooth dark gray (RAL 7012) | |

HAMMOND MANUFACTURING™

# MB655030

www.hammondmfg.com