Nexus 105 Sounder Beacon (AC)

The Nexus 105 is a high output sounder-beacon designed for industrial applications.

Connections are made to the base during the initial wiring phase which results in faster and more reliable installation. In addition, the head is fixed by quarter turn fasteners enabling faster installation and accurate seal compression for weatherproofing.

The combination of powerful sounder and high output beacon ensures a very effective audio-visual signal.

110dB and 120dB units, as well as DC variants, are also available.

Features

- **High sound output: 113dB (max); 105dB typical**
- **High output LED beacon**
- **Quarter turn fasteners for ease of installation**
- **First-fix, wire to base technology**
- **IP66 rated**
- **Volume control for greater flexibility - 20dB**
- **64 tones**
- **Separate connections for sounder & beacon**

Lens Colour Options





Applications - Conveyors, Process control alarm, Cranes, Moving machinery, Safety signalling

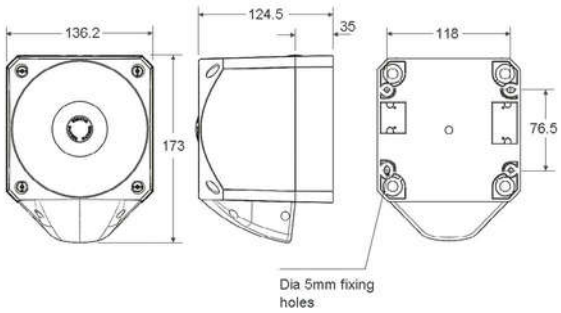

Specifications

Part No.	Lens Colour	Beacon Type	Audibility at 1m	Tones	Voltage	Sounder Current	Beacon Current
PNC-0216	Red Beacon	LED Beacon	Up to 113dB (A)	64	110/230V AC	40mA (max)	55mA
PNC-0217	Amber Beacon	LED Beacon	Up to 113dB (A)	64	110/230V AC	40mA (max)	55mA
PNC-0218	Clear Beacon	LED Beacon	Up to 113dB (A)	64	110/230V AC	40mA (max)	55mA
PNC-0219	Blue Beacon	LED Beacon	Up to 113dB (A)	64	110/230V AC	40mA (max)	55mA
PNC-0220	Green Beacon	LED Beacon	Up to 113dB (A)	64	110/230V AC	40mA (max)	55mA

IP Rating: IP66 **Operating Temp:** -25°C to +65°C **Cable Entries:** 5 **Weight:** 0.8kg

klaxon