efector200

O6H303

O6H-FPKG/AS/4P

Photoelectric sensors

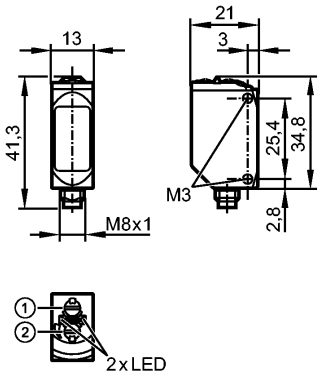

1: output function switch
2: potentiometer sensitivity

Made in Germany

Product characteristics

Diffuse reflection sensor

Rectangular Metal

Connector

adjustable

Background suppression

Range 2...200mm (referred to white paper 200 x 200 mm)

Electrical data

Electrical design		DC PNP
Operating voltage	[V]	10...30 DC
Current consumption	[mA]	22 (24 V)
Type of light		Red light 633 nm
Protection class		III
Reverse polarity protection		yes

Outputs

Output function		light-on/dark-on mode selectable
Voltage drop	[V]	< 2.5
Current rating	[mA]	100
Short-circuit protection		pulsed
Switching frequency	[Hz]	1000

Range

Range [mm]

Range	[mm]	2...200 (referred to white paper 200 x 200 mm)
- Object white (90 % remission)		2...200
- Object grey (18 % remission)		4...200
- Object black (6 % remission)		8...200
Light spot diameter	[mm]	8 (at maximum range)

Accuracy graph

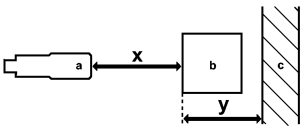

a: sensor
b: object

c: background
x: distance sensor / object
y: min. distance object / background

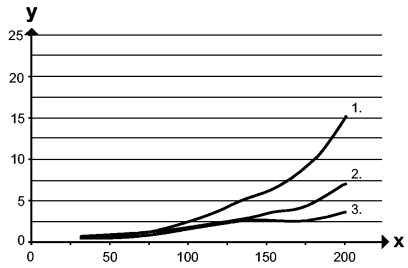

Values in [mm]
1 = object black (6 % remission), background white (90 % remission)
2 = object grey (18 % remission), background white (90 % remission)
3 = object white (90 % remission), background white (90 % remission)

Environment		
Ambient temperature	[°C]	-25...80
Protection		IP 65 / IP 67 ; IP 68 / IP 69K
Tests / approvals		
EMC		EN 60947-5-2
MTTF	[Years]	708
UL approval number		E001
Mechanical data		
Housing materials		housing: stainless steel 316L / 1.4404; plastics: PPSU
Lens material		PMMA
Weight	[kg]	0.036
Displays / operating elements		
Output status indication	LED	yellow
Operation	LED	green
Electrical connection		
Connection		M8 connector

Wiring



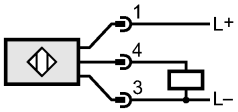

Remarks		
Remarks		cULus - Class 2 source required
Pack quantity	[piece]	1