Q5X Laser Triangulation Sensor with Analog Outputs and IO-Link Instruction Manual

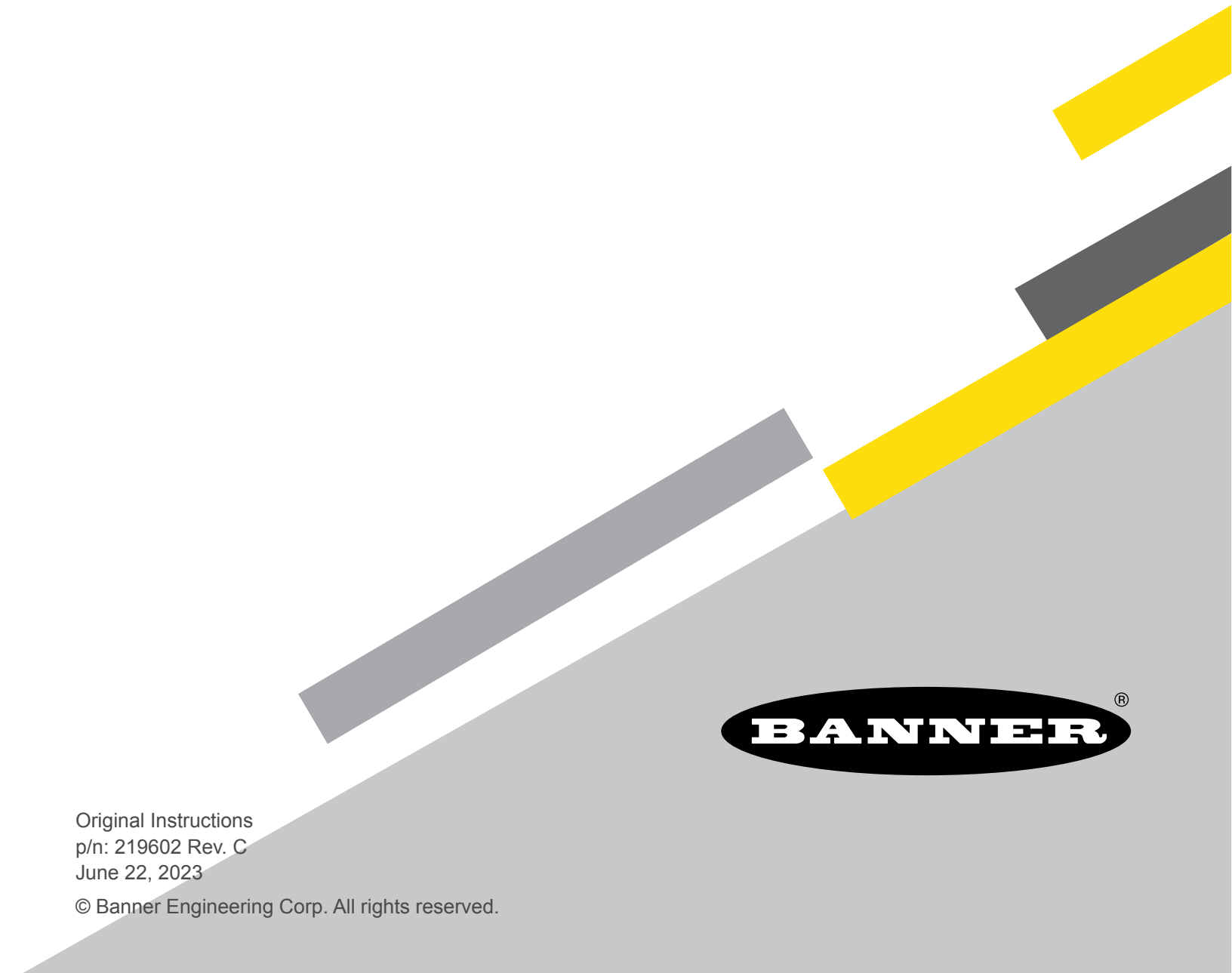

Original Instructions
p/n: 219602 Rev. C
June 22, 2023

© Banner Engineering Corp. All rights reserved.

Contents

Contents 2

Chapter 1 Product Description

Models 5
Overview 5
Class 2 Laser Description and Safety Information 6
Features 7
Display and Indicators 7
Buttons 7

Chapter 2 Installation

Sensor Orientation 9
Mount the Device 10
Wiring Diagrams 10
Cleaning and Maintenance 10
Button Map from RSD1 to Sensor 11

Chapter 3 Sensor Programming

Channel 1 and Channel 2 (CH1/CH2) 13
Setup Mode 13
TEACH Procedures (Analog) 16
TEACH Mode (Discrete) 18
Loss of Signal (LOS) 24
Input Wire Function (inPt) 25
Trigger (trG) 25
Slope (SLPE) 26
Output (out2) 27
Adaptive Tracking (trc2) 27
Window Size (und2) 28
Base Measurement Rate (SPd) 28
Averaging 28
Output Timing Delays 29
Hysteresis (hYS2) 31
Zero Reference Location (ZEro) 31
Shift the Zero Reference Location after a TEACH (ShFt) 32
Offset (oFS1 or oFS2) 33
Display View (diSP) 33
Units (unIt) 33
Output Type Polarity (PoL) 33
Exit Setup Mode (End) 33
Reset to Factory Defaults 33
Manual Adjustments 34
Remote Input 34
Select the TEACH Mode Using the Remote Input 35
Reset to Factory Defaults Using the Remote Input 36
Locking and Unlocking the Sensor Buttons 36
Button Instructions 36
Remote Input Instructions 36
Sync Master/Slave 37

Chapter 4 IO-Link Interface 39

Chapter 5 Specifications

Dimensions 43
Typical Performance Curves 43

Chapter 6 Additional Information

Dual (Intensity + Distance) Mode 45
Dual Mode Reference Surface Considerations 46
Dual Mode Considerations for Clear and Transparent Object Detection 46

Abbreviations 47

Chapter 7 Accessories

Cordsets 51
Brackets 52
Reference Targets 53
RSD1 Remote Display 54

Chapter 8 Product Support and Maintenance

Troubleshooting 55
Contact Us 55
FCC Part 15 Class A 55
Industry Canada Class A 56
Banner Engineering Corp Limited Warranty 56
..... 56

Blank page

Chapter Contents

Models 5
Overview 5
Class 2 Laser Description and Safety Information 6
Features 7

Chapter 1 Product Description

Laser sensor with an analog output and IO-Link



- Laser measurement sensor with a range up to 3000 mm
- Bright output indicators and real-time distance feedback provide easy set up and troubleshooting for reduced installation costs
- Exceptionally high excess gain enables the sensor to reliably detect the darkest objects (< 6% reflective black targets), including black targets against a black background, black targets against a shiny metal background, clear and reflective objects, multicolor packaging, and targets of all colors
- Dual independent output channels and communication over IO-Link
- Optional Remote Sensor Display (RSD) (available separately) enables remote programming and monitoring

WARNING:

- **Do not use this device for personnel protection**
- Using this device for personnel protection could result in serious injury or death.
- This device does not include the self-checking redundant circuitry necessary to allow its use in personnel safety applications. A device failure or malfunction can cause either an energized (on) or de-energized (off) output condition.

Models

Model	Sensing Range	Channel 1 Default	Channel 2 Default	Connection
Q5XKULAF3000-Q8	95 mm to 3000 mm	Analog voltage output (0-10V)	Push/pull discrete output or IO-Link	270° rotatable integral 5-pin M12 male quick disconnect fitting
Q5XKILAF3000-Q8		Analog current output (4-20mA)		

Overview

The Q5X Laser Triangulation Sensor offers analog and discrete (switched) outputs with IO-Link.

The normal sensor state is Run mode. From Run mode, users may change the switch point value and channel selection and perform the selected TEACH method.

The secondary sensor state is Setup mode. From Setup mode, users may select the TEACH mode, adjust all standard operating parameters, and perform a factory reset.

© Banner Engineering Corp.

Class 2 Laser Description and Safety Information

CAUTION:

- **Return defective units to the manufacturer.**
- Use of controls or adjustments or performance of procedures other than those specified herein may result in hazardous radiation exposure.
- Do not attempt to disassemble this sensor for repair. A defective unit must be returned to the manufacturer.

CAUTION:

- **Never stare directly into the sensor lens.**
- Laser light can damage your eyes.
- Avoid placing any mirror-like object in the beam. Never use a mirror as a retroreflective target.



For Safe Laser Use - Class 2 Lasers

- Do not stare at the laser.
- Do not point the laser at a person's eye.
- Mount open laser beam paths either above or below eye level, where practical.
- Terminate the beam emitted by the laser product at the end of its useful path.

Class 2 lasers are lasers that emit visible radiation in the wavelength range from 400 nm to 700 nm, where eye protection is normally afforded by aversion responses, including the blink reflex. This reaction may be expected to provide adequate protection under reasonably foreseeable conditions of operation, including the use of optical instruments for intrabeam viewing.

Low-power lasers are, by definition, incapable of causing eye injury within the duration of a blink (aversion response) of 0.25 seconds. They also must emit only visible wavelengths (400 to 700 nm). Therefore, an ocular hazard may exist only if individuals overcome their natural aversion to bright light and stare directly into the laser beam.

Class 2 Red Laser models: Reference IEC 60825-1:2014	
FDA (CDRH) warning label (Class 2) 	**Output:** < 1.0 mW
	Laser wavelength: 640 to 670 nm
	Pulse Duration: 20 µs to 2 ms

© Banner Engineering Corp.

Features

The Q5X Laser Triangulation Sensor has three major features.

Q5X Features

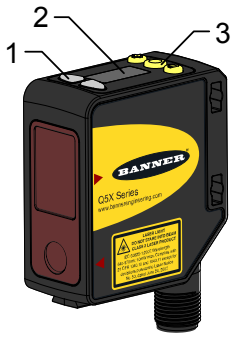

1. Two output indicators (amber)
2. Display
3. Buttons

Display and Indicators

The display is a four-digit, seven-segment LED. Run mode is the primary view displayed.

For 1-PT, 2-PT, BGS, FGS, and DYN TEACH modes, the display shows the current distance to the target in centimeters. For Dual TEACH mode, the display shows the percentage matched to the taught reference surface. A display value of **999P** indicates the sensor has not been taught.

Display in Run Mode

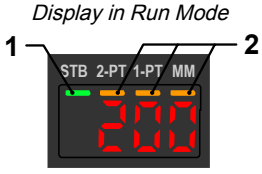

1. Stability Indicator (STB—Green)
2. Active TEACH Indicators
   - 2-PT - Two-Point TEACH (Amber)
   - 1-PT - One-Point TEACH (Amber)
3. Display value indicator (MM - Amber)

Output Indicators

- Ch1: On when the displayed distance is within the taught analog output window
- Ch2: On when the displayed distance is within the taught discrete output window

Stability Indicator (STB)

- On—Stable signal within the specified sensing range
- Flashing—Marginal signal, the target is outside the limits of the specified sensing range, or a multiple peak condition exists
- Off—No target detected within the specified sensing range

Active TEACH Indicators (2PT and 1PT)

- 2-PT on—Two-point TECH mode selected (default)
- 1-PT on—One-point TEACH mode selected

Display Value Indicator (MM)

- On—Display shows the distance in millimeters (default)
- Off—Display shows the analog output value
- Toggle off the MM light by pressing **SELECT** when the sensor is in run mode. This changes the display to show the analog output value. Press **SELECT** again to show the distance value.

Buttons

Use the sensor buttons **(SELECT)(TEACH)**, **(+)(CH1/CH2)**, and **(-)(MODE)** to program the sensor.

© Banner Engineering Corp.

Q5X sensor face

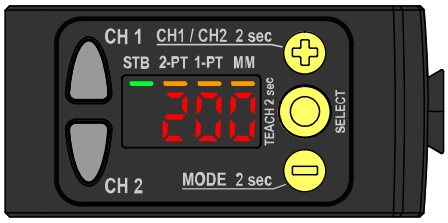

(SELECT)(TEACH) • Press to select menu items in Setup mode • Press and hold for longer than 2 seconds to start the currently selected TEACH mode (the default is two-point TEACH)	**(+)(CH1/CH2)** • Press to navigate the sensor menu in Setup mode • Press to change setting values; press and hold to increase numeric values • Press and hold for longer than 2 seconds to switch between Channel 1 and Channel 2
(-)(MODE) • Press to navigate the sensor menu in Setup mode • Press to change setting values; press and hold to decrease numeric values • Press and hold for longer than 2 seconds to enter Setup mode	**NOTE:** When navigating the menu, the menu items loop.

© Banner Engineering Corp.

Chapter Contents

Sensor Orientation 9
Mount the Device 10
Wiring Diagrams 10
Cleaning and Maintenance 10
Button Map from RSD1 to Sensor 11

Chapter 2 Installation

Sensor Orientation

Optimize detection reliability and minimum object separation performance with correct sensor-to-target orientation. To ensure reliable detection, orient the sensor as shown in relation to the target to be detected.

Optimal Orientation of Target to Sensor

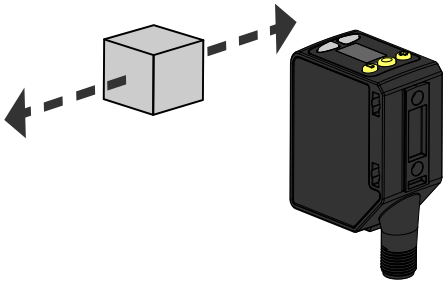

See the following figures for examples of correct and incorrect sensor-to-target orientation as certain placements may pose problems for sensing some targets. The Q5X can be used in the less preferred orientation and at steep angles of incidence and still provide reliable detection performance due to its high excess gain. For the minimum object separation distance required for each case, refer to "Typical Performance Curves" on page 43.

Orientation by a wall

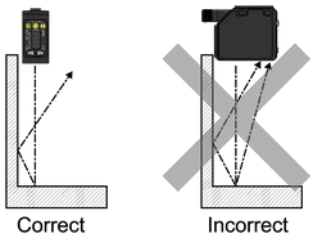

Orientation for a moving object

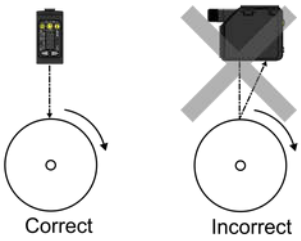

Orientation for a height difference

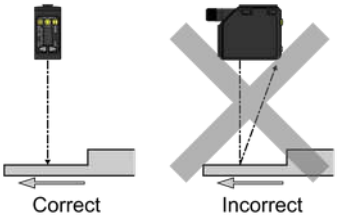

Continued on page 10

© Banner Engineering Corp.

Continued from page 9

Orientation for a color or luster difference

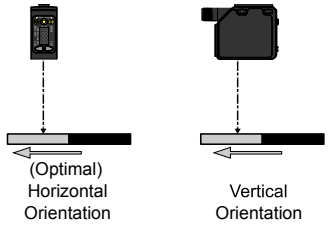

Orientation for highly reflective target(1)

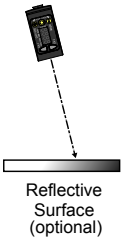

Mount the Device

1. If a bracket is needed, mount the device onto the bracket.
2. Mount the device (or the device and the bracket) to the machine or equipment at the desired location. Do not tighten the mounting screws at this time.
3. Check the device alignment.
4. Tighten the mounting screws to secure the device (or the device and the bracket) in the aligned position.

Wiring Diagrams

Wiring diagram for 4-20mA Analog

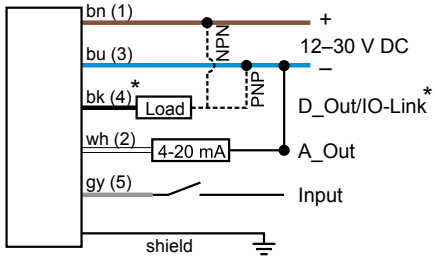

* Push-Pull output. User-configurable PNP/NPN setting.

Wiring diagram for 0-10V Analog

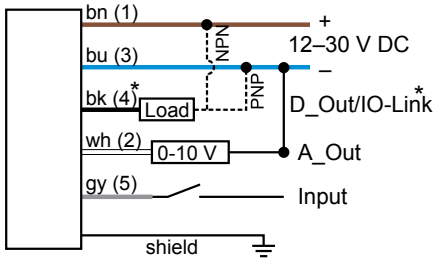

* Push-Pull output. User-configurable PNP/NPN setting.

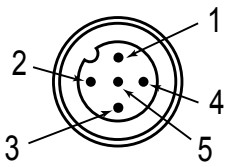

Cleaning and Maintenance

Clean the sensor when soiled and use with care.

Handle the sensor with care during installation and operation. Sensor windows soiled by fingerprints, dust, water, oil, etc. may create stray light that may degrade the peak performance of the sensor. Blow the window clear using filtered, compressed air, then clean as necessary using only water and a lint-free cloth.

(1) Applying tilt to sensor may improve performance on reflective targets. The direction and magnitude of the tilt depends on the application, but a 15° tilt is often sufficient.

© Banner Engineering Corp.

Button Map from RSD1 to Sensor

The sensor may be optionally connected to the Banner RSD1 remote display accessory. Refer to this table for the RSD1 button association with your sensor.

Button association between the RSD1 and the Q4X/Q5X sensors

Device	Up Button	Down Button	Enter Button	Escape Button
RSD1				
Q4X and **Q5X**				N/A

© Banner Engineering Corp.

Blank page

Chapter Contents

Channel 1 and Channel 2 (CH1/CH2) 13
Setup Mode 13
Manual Adjustments 34
Remote Input 34
Locking and Unlocking the Sensor Buttons 36
Button Instructions 36
Remote Input Instructions 36
Sync Master/Slave 37

Chapter 3 Sensor Programming

Program the sensor using the buttons on the sensor or the remote input (limited programming options).

In addition to programming the sensor, use the remote input to disable the buttons for security, preventing unauthorized or accidental programming changes. See "Locking and Unlocking the Sensor Buttons" on page 36 for more information.

Channel 1 and Channel 2 (CH1/CH2)

Press CH1/CH2 button to switch between Channel 1 and Channel 2.

Within each channel, there are options specific to that channel. For settings that are common to both channels, the menus are only available in Channel 1. The default is Channel 1.

To switch between Channel 1 and Channel 2:

1. Press and hold **CH1/CH2** for longer than 2 seconds. The current selection displays.
2. Press **CH1/CH2** again. The new selection flashes slowly.
3. Press **SELECT** to change the Channel and return to Run mode.

If neither **SELECT** nor **CH1/CH2** are pressed after step 2, the new selection flashes slowly for a few seconds, then flashes quickly and the sensor automatically changes the Channel and returns to Run mode.

Setup Mode

Access Setup mode and the sensor menu from Run mode by pressing and holding **MODE** for longer than 2 seconds. Use **+** and **-** to navigate through the menu. Press **SELECT** to select a menu option and access the submenus. Use **+** and **-** to navigate through the submenus. Press **SELECT** to select a submenu option and return to the top menu, or press and hold **SELECT** for longer than 2 seconds to select a submenu option and return immediately to Run mode.

To exit Setup mode and return to Run mode, navigate to **End** and press **SELECT**.

The number that follows a menu option, for example **tch1**, indicates the channel that is selected. For menu items without a number (excluding submenu items), these menu options are only available from Channel 1 and the settings apply to both channels.

© Banner Engineering Corp.

Sensor Menu Map—Channel 1

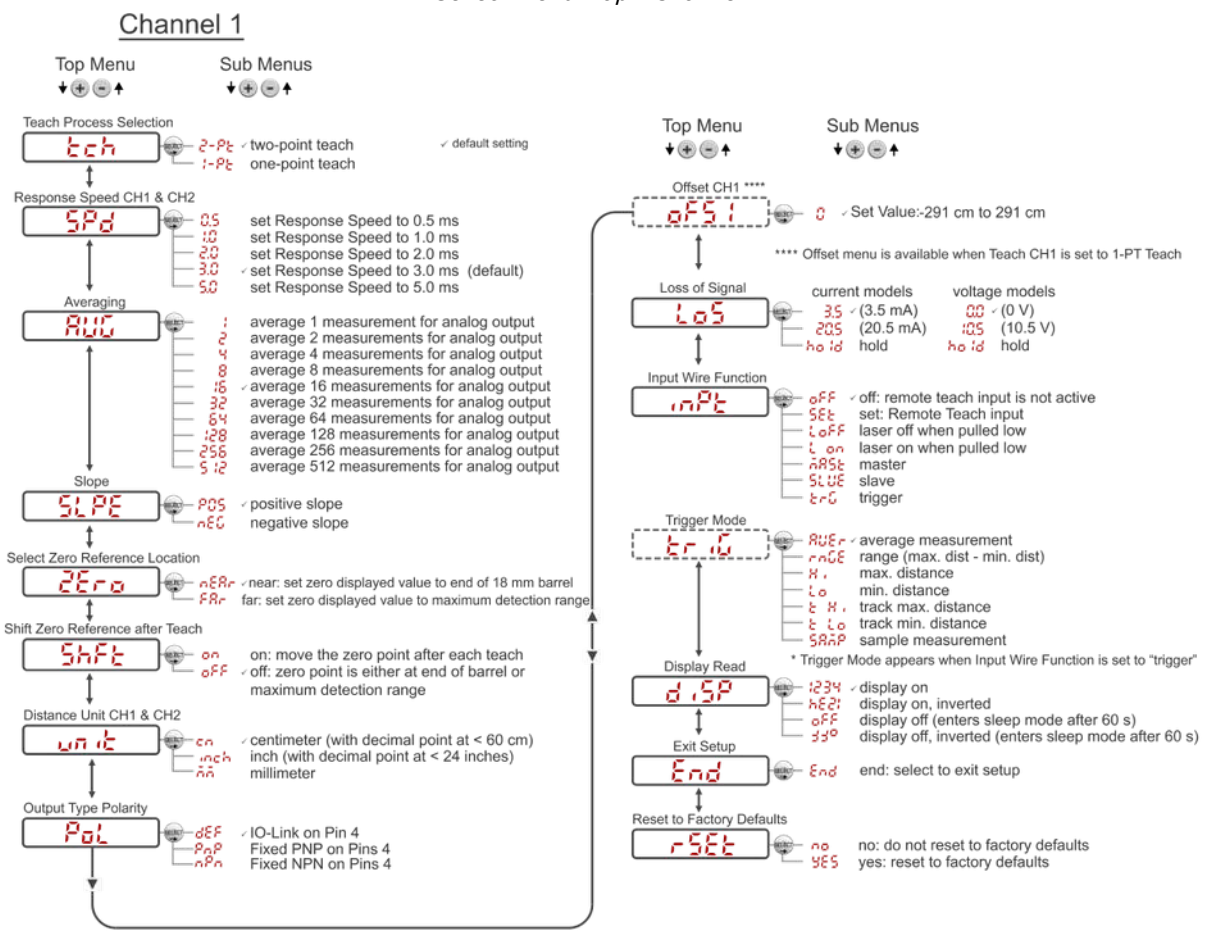

© Banner Engineering Corp.

Sensor Menu Map—Channel 2

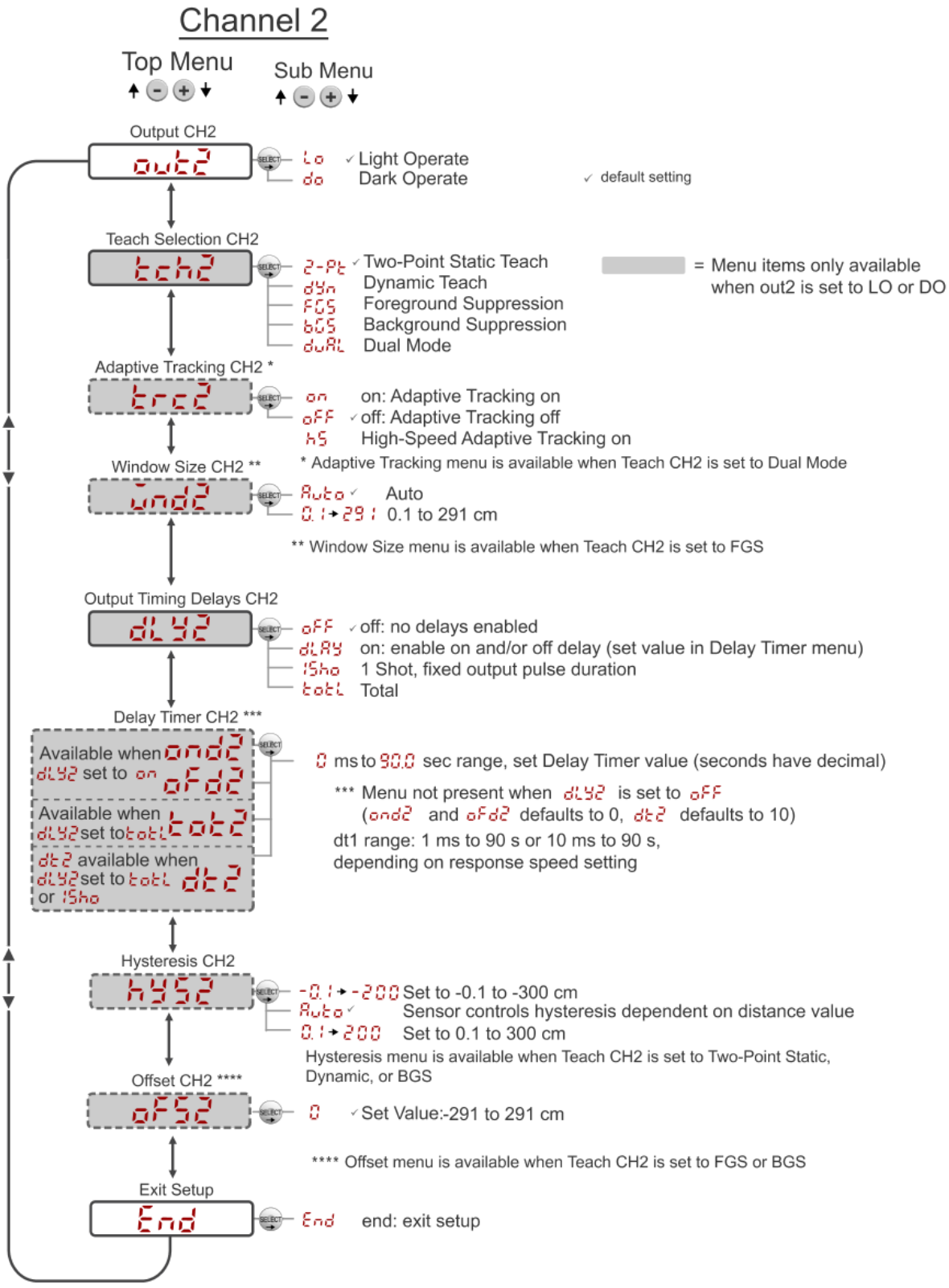

© Banner Engineering Corp.

TEACH Procedures (Analog)

Use the following procedures to teach the Ch1 analog output.

To cancel a TEACH procedure, press **TEACH** for longer than 2 seconds, or hold the remote input low for longer than 2 seconds. **CnCL** momentarily displays when a TEACH procedure is canceled.

Two-Point (2-Pt) TEACH (Channel 1 Only)

Two-point TEACH sets the distance values associated with 0 V and 10 V (4 mA and 20 mA) based on taught target distances.

Two-Point TEACH

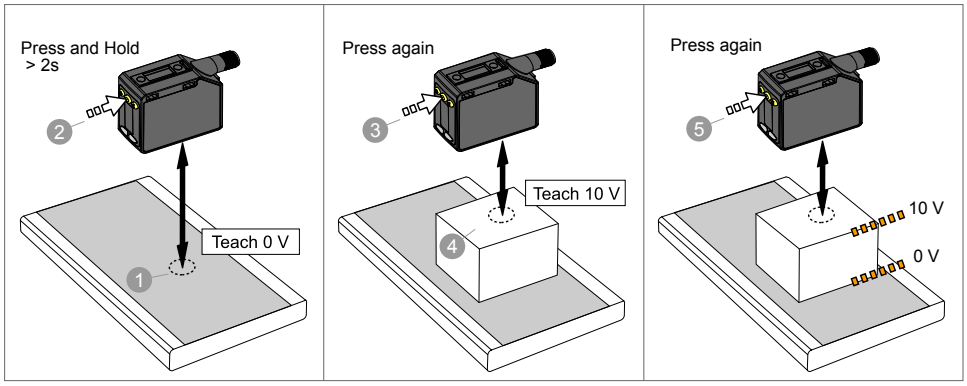

The sensor must be set to **tch** = **2-Pt** to use the following instructions. To program the sensor using remote input, remote input must be enabled (**inPt** = **SEt**).

1. Present the target at the desired 0 V (4 mA) distance.

Method	Action	Result
Push Button	Present the first target. The sensor-to-target distance must be within the sensor's range.	The target's measurement value displays.
Remote Input		

2. Start the TEACH mode.

Method	Action		Result
Push Button	Press and hold **TEACH** for longer than 2 seconds.		**SEt** and **O U** flash alternately on the display. The 2-Pt indicator flashes.
Remote Input	Single-pulse the remote input.		

3. Teach the sensor at the 0 V (4 mA) distance.

Method	Action		Result
Push Button	Press **TEACH** to teach the target.		The measurement value flashes briefly, and the sensor is taught the first target. **SEt** and **10 U** flash alternately on the display. The 2-Pt indicator flashes.
Remote Input	Single-pulse the remote input.		

4. Present the target at the desired 10 V (20 mA) distance.

© Banner Engineering Corp.

Method	Action	Result
Push Button	Present the second target. The sensor-to-target distance must be within the sensor's range.	**SEt** and **10 U** flash alternately on the display. The 2-Pt indicator flashes.
Remote Input		

5. Teach the sensor at the 10 V (20 mA) distance.

Method	Action		Result
Push Button	Press **TEACH** to teach the target.		The new switch point flashes rapidly and the sensor returns to Run mode.
Remote Input	Single-pulse the remote input.		

If the same target is taught both times, **Lo** and **SPAn** flash alternately on the display, the 10 V (20 mA) value is automatically adjusted to maintain the minimum window size, the new distance quickly flashes four times, and the sensor returns to Run mode.

It is possible to skip teaching the 0 V (4mA) and/or the 10 V (20mA) point and continue to use the existing setting. At the applicable teach step, when using the push button, hold **-** for four seconds. The sensor displays **SAVE** and then flashes the existing value. When using the remote input, double-pulse the remote input.

One-Point (1-PT) TEACH (Channel 1 Only)

One-point TEACH mode defines the span of the analog output. One-point TEACH also defines the 5 V (12 mA) midpoint of the analog output to center the analog output around a reference target position.

One-Point Window

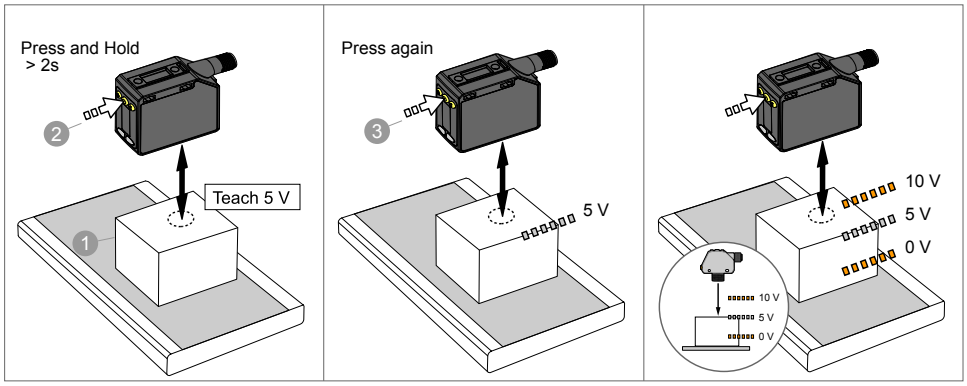

The sensor must be set to **tch** = **1-Pt** to use the following instructions. To program the sensor using remote input, remote input must be enabled (**inPt** = **SEt**).

1. Present the target at the desired 5 V (12 mA) distance.

Method	Action	Result
Push Button	Present the first target. The sensor-to-target distance must be within the sensor's range.	The target's measurement value displays.
Remote Input		

2. Start the TEACH mode.

Method	Action	Result
Push Button	Press and hold **TEACH** for longer than 2 seconds.	**SEt** and **5 U** flash alternately on the display. The 1-Pt indicator flashes.

Continued on page 18

© Banner Engineering Corp.

Continued from page 17

Method	Action		Result
Remote Input	No action is required.		N/A

3. Teach the sensor the 5 V (12 mA) midpoint.

Method	Action		Result
Push Button	Press **TEACH** to teach the target.		The measurement value flashes briefly, and the sensor returns to Run mode.
Remote Input	Single-pulse the remote input.		

TEACH Mode (Discrete)

Use this menu to select the TEACH mode. The default is two-point TEACH. Channel 2 is discrete only.

The number that follows **tch** on the display indicates which channel is selected.

- **2-Pt**—Two-point static TEACH
- **dYn**—Dynamic background suppression
- **FGS**—One-point window (foreground suppression)
- **bGS**—One-point background suppression
- **duAL**—Dual (intensity + distance) window

After the TEACH mode is selected, from Run mode, press and hold **TEACH** for longer than 2 seconds to start the TEACH mode and program the sensor.

Two-Point Static Background Suppression (2-Pt) (Channel 2 Only)

Two-point TEACH sets a single switch point. The sensor sets the switch point between two taught target distances, relative to the shifted origin location.

Two-Point Static Background Suppression (Light Operate shown)

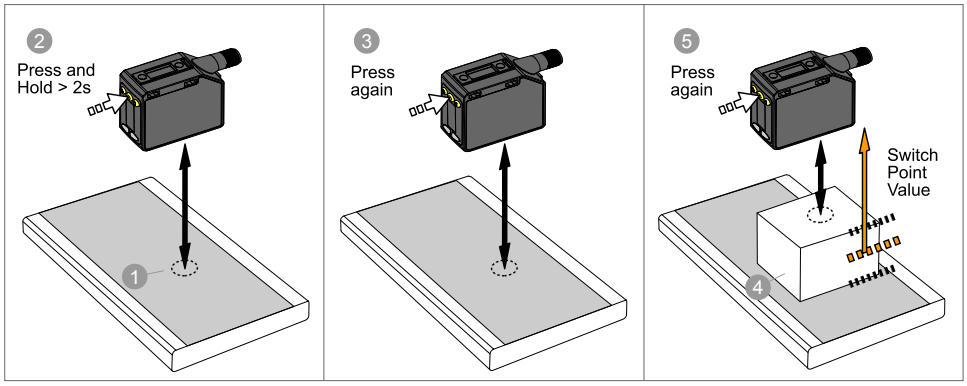

The sensor must be set to **tch** = **2-Pt** to use the following instructions. To program the sensor using remote input, remote input must be enabled (**inPt** = **SEt**).

1. Present the target.

Method	Action	Result
Push Button	Present the first target. The sensor-to-target distance must be within the sensor's range.	The target's measurement value displays.
Remote Input		

2. Start the TEACH mode.

© Banner Engineering Corp.

Method	Action		Result
Push Button	Press and hold **TEACH** for longer than 2 seconds.		**SEt** and **1St** flash alternately on the display. The **1-Pt** and **2-Pt** indicators flash.
Remote Input	No action is required.		N/A

3. Teach the sensor.

Method	Action		Result
Push Button	Press **TEACH** to teach the target.		The sensor is taught the first target. **SEt**, **2nd**, and the current distance measurement flash alternately on the display. The **1-Pt** and **2-Pt** indicators flash.
Remote Input	Single-pulse the remote input.		

4. Present the target.

Method	Action	Result
Push Button	Present the second target. The sensor-to-target distance must be within the sensor's range.	**SEt**, **2nd**, and the distance measurement flash alternately on the display. The **1-Pt** and **2-Pt** indicators flash.
Remote Input		

5. Teach the sensor.

Method	Action		Result
Push Button	Press **TEACH** to teach the target.		The new switch point flashes rapidly and the sensor returns to Run mode.
Remote Input	Single-pulse the remote input.		

Expected TEACH Behavior for Two-Point Static Background Suppression

Condition	TEACH Result	Display
Two valid distances that are greater than or equal to the horizontal minimum object separation	Sets a switch point between the two taught distances.	The switch point distance flashes on the display.
Two valid distances that are less than the horizontal minimum object separation	Sets a switch point in front of the furthest taught distance equal to the uniform reflectivity minimum object separation.	**bGS** and the switch point distance flash alternately on the display.
One valid distance with one invalid TEACH point	Sets a switch point between the one taught distance and the maximum range.	**obJt** and the switch point distance flash alternately on the display.
Two invalid TEACH points	Sets a switch point for the currently selected channel at 197 cm.	**FuLL** and the switch point distance flash alternately on the display.

See "Typical Performance Curves" on page 43 for the minimum object separation.

Dynamic Background Suppression (dYn) (Channel 2 Only)

Dynamic TEACH sets a single switch point during machine run conditions. Dynamic TEACH is recommended for applications where a machine or process may not be stopped for teaching. The sensor takes multiple samples and the switch point is set between the minimum and the maximum sampled distances.

© Banner Engineering Corp.

Dynamic Background Suppression

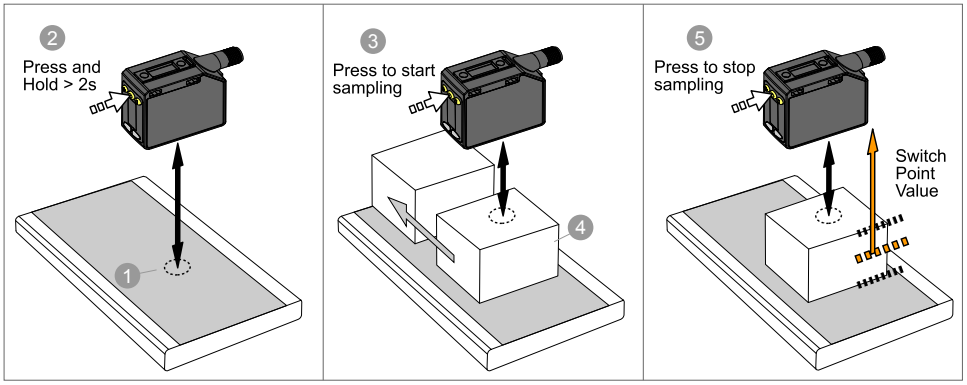

The sensor must be set to **tch** = **dYn** to use the following instructions. The DYN indicator is amber to indicate Dynamic TEACH mode. To program the sensor using remote input, remote input must be enabled (**out2** = **SEt**).

1. Present the target.

Method	Action	Result
Push Button	Present the first target. The sensor-to-target distance must be within the sensor's range.	The target's measurement value displays.
Remote Input		

2. Start the TEACH mode.

Method	Action	Result
Push Button	Press and hold **TEACH** for longer than 2 seconds.	**dYn** and **Strt** flash alternately on the display. The **1-Pt** and **2-Pt** indicators flash.
Remote Input	No action is required.	N/A

3. Teach the sensor.

Method	Action	Result
Push Button	Press **TEACH** to teach the target.	The sensor begins sampling target distance information and **dYn** and **StoP** flash alternately on the display. The **1-Pt** and **2-Pt** indicators flash.
Remote Input	Single-pulse the remote input. 	

4. Present the targets.

Method	Action	Result
Push Button	Present additional targets. The sensor-to-target distance must be within the sensor's range.	The sensor continues to sample target distance information and **dYn** and **StoP** flash alternately on the display. The **1-Pt** and **2-Pt** indicators flash.
Remote Input		

5. Teach the sensor.

Method	Action	Result
Push Button	Press **TEACH** to stop teaching the sensor.	The new switch point flashes rapidly and the sensor returns to Run mode.

Continued on page 21

Continued from page 20

Method	Action		Result
Remote Input	Single-pulse the remote input.		

Expected TEACH Behavior for Dynamic Background Suppression

Condition	TEACH Result	Display
Two valid distances that are greater than or equal to the horizontal minimum object separation	Sets a switch point between the two taught distances.	The switch point distance flashes on the display.
Two valid distances that are less than the horizontal minimum object separation	Sets a switch point in front of the furthest taught distance equal to the uniform reflectivity minimum object separation.	**bGS** and the switch point distance flash alternately on the display.
One valid distance with one invalid TEACH point	Sets a switch point between the one taught distance and the maximum range.	**obJt** and the switch point distance flash alternately on the display.
Two invalid TEACH points	Sets a switch point for the currently selected channel at 120 cm.	**bGS** and the switch point distance flash alternately on the display.

See "Typical Performance Curves" on page 43 for the minimum object separation.

One-Point Window (FGS) (Foreground Suppression) (Channel 2 Only)

One-point window sets a window (two switch points) centered around the taught target distance. Loss of signal is treated as a detection in One-Point Window mode. The size of the taught window is the vertical minimum object separation.
See "Typical Performance Curves" on page 43.

Manually adjust the window size from Run mode using + and -.

One-Point Window (Foreground Suppression)

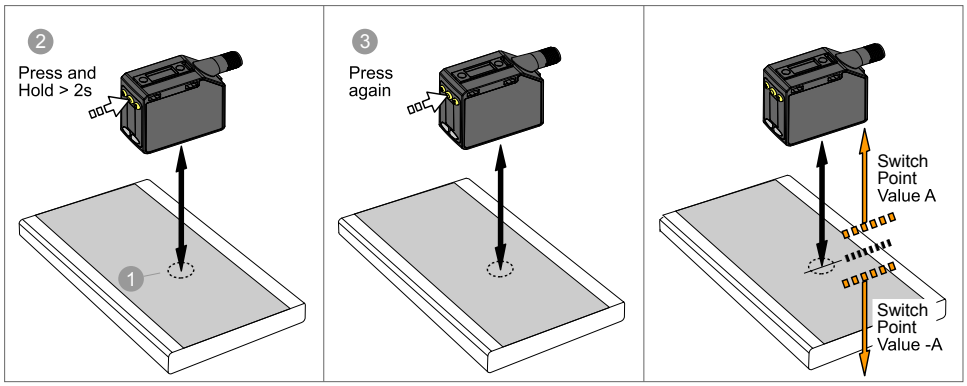

The sensor must be set to **tch** = **FGS** to use the following instructions. The FGS indicator is amber to indicate One-Point Window (Foreground Suppression) mode. To program the sensor using remote input, remote input must be enabled (**out2** = **SEt**).

1. Present the target.

Method	Action	Result
Push Button	Present the target. The sensor-to-target distance must be within the sensor's range.	The target's measurement value displays.
Remote Input		

2. Start the TEACH mode.

© Banner Engineering Corp.

Method	Action		Result
Push Button	Press and hold **TEACH** for longer than 2 seconds.		**Light Operate** **SEt** and **on** flash alternately on the display. The **1-Pt** and **2-Pt** indicators flash. **Dark Operate** **SEt** and **oFF** flash alternately on the display. The **1-Pt** and **2-Pt** indicators flash.
Remote Input	No action required.		N/A

3. Teach the sensor.

Method	Action		Result
Push Button	Press **TEACH** to teach the target.		The sensor returns to Run mode.
Remote Input	Single-pulse the remote input.		

Expected TEACH Behavior for One-Point Window (Foreground Suppression)

Condition	TEACH Result	Display
One valid TEACH point with both switch points in range (with offset, if applicable)	Sets a window (two switch points) centered around the taught distance. The ± window size is equal to the non-uniform reflectivity minimum object separation. The two switch points always stay within the specified sensing range.	The sensor returns to Run mode.
One invalid TEACH Point	Sets a window (two switch points) centered around 150 cm. The window size is ± 10 cm.	**----** and the window center point distance flash alternately on the display.
One valid TEACH point with one switch point within range and one switch point out of range (with offset, if applicable)	Sets a window (two switch points) that is centered at the TEACH point (after offset, if applicable) with one switch point at the maximum range.	**----** and the ± window size flash alternately on the display.
One valid TEACH point that, after the offset, results in a both switch points outside of the range	Sets a window (two switch points) centered around 150 cm. The window size is ± 10 cm.	**oFSt** and the window center point distance flash alternately on the display.

See "Typical Performance Curves" on page 43 for the minimum object separation.

One-Point Background Suppression (bGS) (Channel 2 Only)

One-point background suppression sets a single switch point in front of the taught target distance. Objects beyond the taught switch point are ignored. The switch point is set in front of the taught target distance by the vertical minimum object separation. See "Typical Performance Curves" on page 43.

One-Point Background Suppression

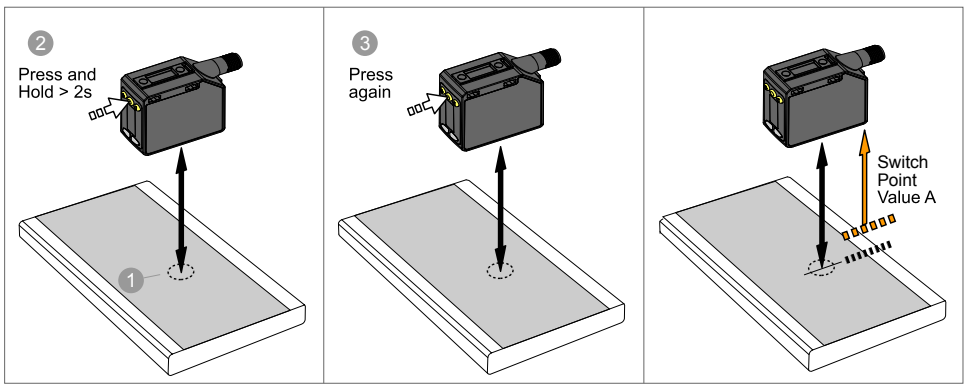

© Banner Engineering Corp.

The sensor must be set to **tch** = **bGS** to use the following instructions. The BGS indicator is amber to indicate Background Suppression mode. To program the sensor using remote input, remote input must be enabled (**out2** = **SEt**).

1. Present the target.

Method	Action	Result
Push Button	Present the target. The sensor-to-target distance must be within the sensor's range.	The target's measurement value displays.
Remote Input		

2. Start the TEACH mode.

Method	Action		Result
Push Button	Press and hold **TEACH** for longer than 2 seconds.		**Light Operate** **SEt** and **oFF** flash alternately on the display. The **1-Pt** **2-Pt** and indicators flash. **Dark Operate** **SEt** and **on** flash alternately on the display. The**1-Pt** and **2-Pt** indicators flash.
Remote Input	No action required.		N/A

3. Teach the sensor.

Method	Action		Result
Push Button	Press **TEACH** to teach the target.		The new switch point flashes rapidly and the sensor returns to Run mode.
Remote Input	Single-pulse the remote input.		

Expected TEACH Behavior for One-Point Background Suppression

Condition	TEACH Result	Display
One valid TEACH point If an Offset is applied, the TEACH point is still valid	Sets a switch point in front of the taught distance equal to the non-uniform reflectivity minimum object separation.	The switch point distance flashes on the display.
One invalid TEACH point	Sets a switch point at 120 cm.	**bGS** and the switch point distance flash alternately on the display.
One valid TEACH point that, after offset, becomes invalid	Sets a switch point at 120 cm.	**oFSt** and the switch point distance flash alternately on the display.

See "Typical Performance Curves" on page 43 for the minimum object separation.

Dual (Intensity + Distance) (duAL) (Channel 2 Only)

Dual (intensity + distance) TEACH records the distance and amount of light received from the reference surface. The output switches when an object passing between the sensor and the reference surface changes the perceived distance or amount of returned light. For more information, see "Additional Information " on page 45.

To use the following instructions, set the sensor to **tch** = **duAL**. The **1-Pt** and **2-Pt** indicators are amber.

To program the sensor using remote input, remote input must be enabled (**out2** = **SEt**).

© Banner Engineering Corp.

Dual TEACH (Channel 2 only)

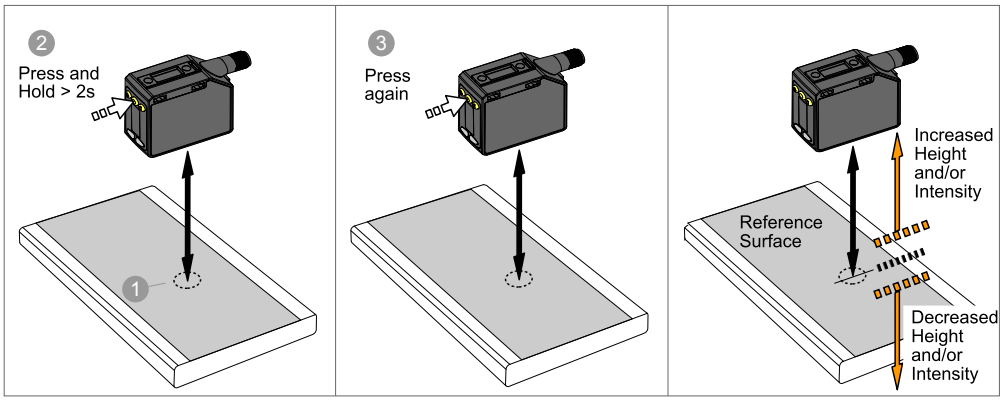

1. Present the target.

Method	Action	Result
Push Button **Remote Input**	Present the reference target.	The target's match percentage displays

2. Start the TEACH mode.

Method	Action	Result
Push Button	Press and hold the TEACH button for more than 2 seconds.	Light Operate: **SEt** and **on** flash on the display. The **1-Pt** and **2-Pt** indicators flash. Dark Operate: **SEt** and **oFF** flash on the display. The **1-Pt** and **2-Pt** indicators flash.
Remote Input	No action required.	N/A

3. Teach the sensor.

Method	Action		Result
Push Button	Press the TEACH button.		The switching threshold flashes rapidly and the sensor returns to Run mode.
Remote Input	Single-pulse the remote input.		

Expected TEACH Behavior for Dual (Intensity + Distance) Mode

Condition	TEACH Result	Display
One valid reference surface is taught within sensing range	Sets a dual (intensity + distance) window centered around the taught reference surface. The ± window size is the previously used switching threshold, or 50% by default.	The switching threshold flashes on the display.
One reference surface is taught outside the sensing range	Sets a dual (intensity + distance) window centered around the taught reference surface that is outside the sensing range. The sensing conditions may not be as reliable.	**out** flashes on the display.
One invalid TEACH Point	No reference surface is taught, the output will change when any object is detected.	**FuLL** flashes on the display.

Loss of Signal (LOS)

Use this menu to select the Analog Output value used by the sensor during a loss of signal. When a signal is restored, measurement resumes. The default is 0 V (4 mA).

Analog output value during a loss of signal

Option	Description
0 V (4 mA)—default	The Analog Output switches to this value 2 seconds after a loss of signal. When advanced measurements are enabled, the Analog Output is updated to this value immediately upon the release of the trigger input.
10.5 V (20.5 mA)	The Analog Output switches to this value 2 seconds after a loss of signal. When advanced measurements are enabled, the Analog Output is updated to this value immediately upon the release of the trigger input.
Hold	The Analog Output holds the last value indefinitely during a loss of signal. When advanced measurements are enabled, the last value is held across the triggered measurement periods.

The Range advanced measurement behavior is affected by the Loss of Signal option. For additional information on advanced measurements, see "Trigger (trG)" on page 25. The Range advanced measurement tracks a maximum and a minimum during the measurement period, and calculates the range as follows:
Range = maximum distance – minimum distance
If the maximum and/or minimum measurements are outside of the taught range values, the Loss of Signal option determines how the range is calculated.

Sensor behavior in range mode

Option	Description
0 V (4 mA)	If the maximum or minimum measurement is outside of the taught range values, the sensor outputs 0 V (4 mA) to indicate an out-of-range measurement.
10.5 V (20.5 mA)	If the maximum or minimum measurement is outside of the taught range values, the sensor outputs 10.5 V (20.5 mA) to indicate an out-of-range measurement.
Hold	The sensor limits the maximum and minimum measurements so that they cannot exceed the taught range values.

Input Wire Function (inPt)

Use this menu to select the input wire function. The default is off, ignore all remote input pulses.

- **oFF**—Ignore all remote input pulses
- **SEt**—Remote TEACH input
- **LoFF**—Laser off when pulled low
- **Lon**—Laser on when pulled low
- **nASt**—Master sync line output for two-sensor cross-talk avoidance
- **SLUE**—Slave sync line input for two-sensor cross-talk avoidance
- **trG**—Trigger mode for advanced measurements (see "Trigger (trG)" on page 25)

To configure sensors for master-slave operation, see "Sync Master/Slave " on page 37.

Trigger (trG)

The Trigger option sets the advanced measurement that is calculated when a trigger event is detected on the remote input.

The analog output updates with the new advanced measurement on each trigger event. To use these Trigger options, the sensor Input Type option must be set to **trG**.

Trigger submenus

Trigger Submenus	Description
Average **AUEr**	The averaged distance since the last trigger event. (default)

Continued on page 26

© Banner Engineering Corp.

Continued from page 25

Trigger Submenus	Description
Range **rnGE**	The difference between the maximum and minimum distance since the last trigger event. For additional information on the Range measurement behavior when the maximum or minimum distance is outside of the taught values, see " Loss of Signal (LOS)" on page 24.
Maximum **Hi**	The maximum distance since the last trigger event.
Minimum **Lo**	The minimum distance since the last trigger event.
TrackMax **t Hi**	The maximum distance since the last trigger event. The Analog Output tracks new maximum values during the measurement period.
TrackMin **t Lo**	The minimum distance since the last trigger event. The Analog Output tracks new minimum values during the measurement period.
Sample **SAnP**	The current distance at the time of the trigger event. The Analog Output tracks the sample values during the measuring period.

Sample

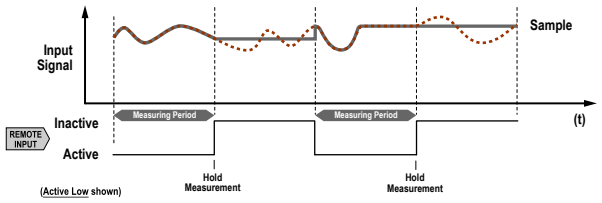

Average

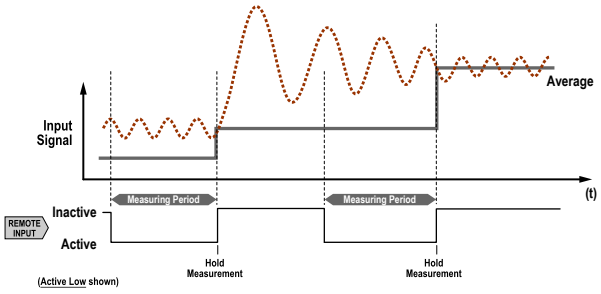

Maximum and Minimum

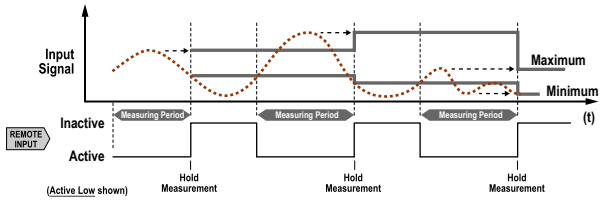

Range

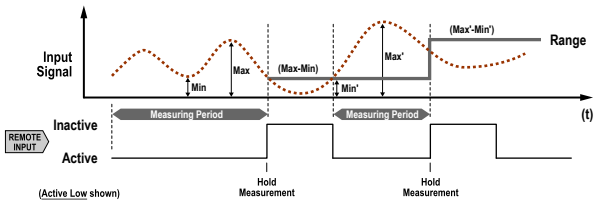

Track Maximum and Track Minimum

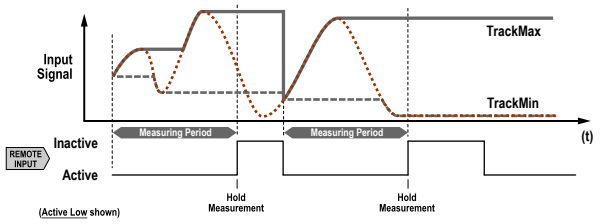

Slope (SLPE)

Use this menu to set the slope as positive or negative.

This swaps the 0 V and 10 V (4 and 20 mA) values. The default is positive. The slope is defined relative to the zero reference, so if the zero setting is changed from near to far, a slope will be considered positive if the analog output increases as the target becomes closer to the face of the sensor.

- **POS**—the slope is positive

© Banner Engineering Corp.

- **nEG**—the slope is negative

Slope—Voltage Sourcing Models

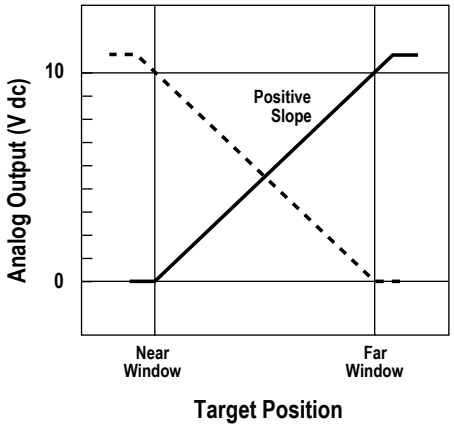

The analog voltage output tracks slightly beyond the upper window limit (up to 10.2 V)

Slope—Current-Sourcing Models

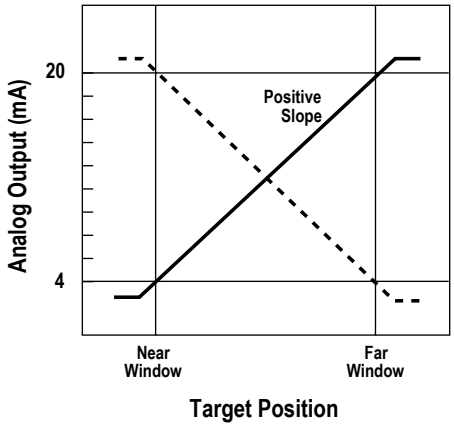

The analog current output tracks slightly beyond each window limit (from 3.8 mA to 20.2 mA)

Output (out2)

The number that follows **out** on the display indicates which channel is selected.

The Output 2 menu is available in Channel 2. Use this menu to select light operate (LO) or dark operate (DO). The default output configuration is light operate. To switch between light operate and dark operate, select the desired menu option.

- **Lo**—Light operate
- **do**—Dark operate

Adaptive Tracking (trc2)

In adaptive tracking mode, the laser intensity changes to compensate for a loss in excess gain - normally caused by a dirty lens.

When operating in Dual Mode, the Adaptive Tracking Algorithm adjusts the switching thresholds (distance and intensity) around a taught reference surface. Adaptive tracking adjusts for small variations in the reference surface to maintain a consistent 100P (100%) on the display and to ensure reliable detection. The Adaptive Tracking menu is only available when Teach Ch2 is set to Dual Mode.

Adjustment of the thresholds only occurs when the reference surface is visible to the senor (that is, no target is present). The Adaptive Tracking Algorithm can reduce or eliminate the need to periodically re-teach the sensor as environmental conditions change around the sensor.

Enable or disable the Adaptive Tracking Algorithm from the sensor menu. The appropriate speed depends on the application. This menu is available only if Dual Mode is selected. For Channel 2, the output must be set to light operate or dark operate.

- **HS**—High-Speed Adaptive Tracking On
- **on**—Adaptive Tracking On
- **oFF**—Adaptive Tracking Off (default)

OFF disables the Adaptive Tracking Algorithm—Prevents the sensor from adjusting the thresholds around the taught reference surface while the sensor is in dual mode. The sensor will not adapt to or learn any target. Environmental changes may cause the displayed value to deviate from 100P (100%) over time. A periodic re-teach of the reference surface may be required to restore the displayed value to 100P if this is important to the application.

There are some cases in which disabling adaptive tracking is useful. For example, disable adaptive tracking if the target passes very slowly through the sensing beam, if the target might stop while partially blocking the beam, and if the environmental conditions are stable.

© Banner Engineering Corp.

ON enables the Adaptive Tracking Algorithm at the standard speed—Recommended for many applications detecting low contrast targets. Standard adaptive tracking adjusts the thresholds around slowly changing background and environmental conditions. It adjusts the sensor for stable detection when the environment changes due to gradual dust accumulation, machine vibration, or ambient temperature changes which influence the signal from the reference surface. Standard adaptive tracking will not easily adapt to or learn slow moving, low contrast targets (for example, clear targets entering and exiting the beam over approximately 2 seconds).

HS enables the Adaptive Tracking Algorithm at high speed—Optional adaptive tracking setting used with dual mode. Use high speed adaptive tracking when the signal from the reference surface changes quickly due to unstable environmental conditions and high contrast and high-speed targets are being detected. High speed adaptive tracking adjusts the sensor for stable detection in challenging environmental conditions such as dust accumulation, machine vibration, ambient temperature changes, or a non-stable reference surface (for example, a running belt or web which influences the signal from the reference surface). For example, if the signal from the reference surface changes by 10% due to environmental effects, high speed adaptive tracking adjusts the displayed value back to 100P (100%) over 2 to 3 seconds.

High speed adaptive tracking addresses certain applications where the reference surface is not stable, but the sensor must detect high speed and high contrast targets reliably. With high speed adaptive tracking there is the potential for the sensor to adapt the thresholds to slow moving or low contrast targets, leading to missed detection events. If the detection events are generating small signal changes of similar magnitude to the background changes, detection problems are likely. Stabilize the reference surface to avoid this problem.

Window Size (und2)

Use this menu to manually set a window size for subsequent TEACH operations. This menu is available only if one-point window (foreground suppression) mode is selected.

The default selection is Auto, where the foreground suppression (FGS) window size is automatically calculated.

This setting is automatically applied during any subsequent teach operation. The window size value represents a ±cm value, so the total window size is twice this value. For example, a window set of 10 cm gives a 20 cm window centered around the taught point. The window size can also be changed directly from Run mode after changing the setting to any value except Auto. For Channel 2, the output must be set to light operate or dark operate.

Values: 0.1 cm to 291 cm

Base Measurement Rate (SPd)

Use this setting to select the base measurement rate. Excess gain will be affected by the response speed as shown. The total response speed depends upon the base measurement rate setting and the averaging setting.

See "Averaging " on page 28 for more information.

Default: 3 ms

Excess gain at base measurement rates

Base Measurement Rate (ms)	Base Measurement Rate in Sync Mode (ms)	Ambient Light Rejection	Excess Gain with a 90% White Card				
			at 100 mm	at 500 mm	at 1000 mm	at 2000 mm	at 3000 mm
0.5	1.0	Disabled	200	80	25	6	3
1.0	2.0	Enabled	200	80	25	6	3
2.0	4.0	Enabled	920	400	100	25	12
3.0	6.0	Enabled	1600	700	200	50	25
5.0	10.0	Enabled	3200	1400	400	100	50

Averaging

Use the Averaging **AUG** menu to set the number of measurements that are averaged together for the analog output.

Increasing the averaging improves repeatability, but increases the total response speed. The default is 16. The filter can be set to 1, 2, 4, 8, 16, 32, 64, 128, 256, or 512. Use the table to determine the total response speed.

© Banner Engineering Corp.

Response Speed (ms)

Base Measurement Rate	Filter Setting									
	1	2	4	8	16	32	64	128	256	512
0.5 ms	0.5	1.5	3	7	13	26	50	100	200	400
1.0 ms	1	3	5	11	20	45	90	160	320	650
2.0 ms	3	5	9	20	40	80	150	300	600	1200
3.0 ms	5	8	15	30	55	110	220	420	840	1680
5.0 ms	10	15	25	45	85	170	340	680	1350	2270

Lateral Entry Response

Lateral entry to the Q5X	Base Measurement Rate (ms)	Lateral Entry Response (ms)
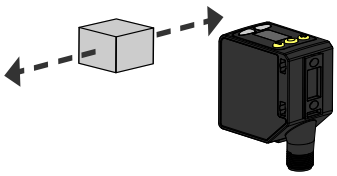	0.5	3
	1.0	5
	2.0	15
	3.0	25
	5.0	50

When lateral entry needs to be considered, the lateral entry response is added to calculate the total response time.

NOTE: The Q5X uses a dynamic measurement rate, so these response times are worst-case.

Output Timing Delays

Use this menu to select the output timing delay to be set.

On and off delay timers can be used together. The default is no delay. For Channel 2, this menu is available when the output is set to light operate or dark operate.

The number that follows **dLY** on the display indicates which channel is selected.

oFF—No delay

dLAY—Delay—enables the selection of on and off delay timers

1Sho —One-shot—enables a one-shot, fixed output pulse duration

totL— Totalizer—enables an output after a defined number of targets are counted

© Banner Engineering Corp.

Output Timing Delays

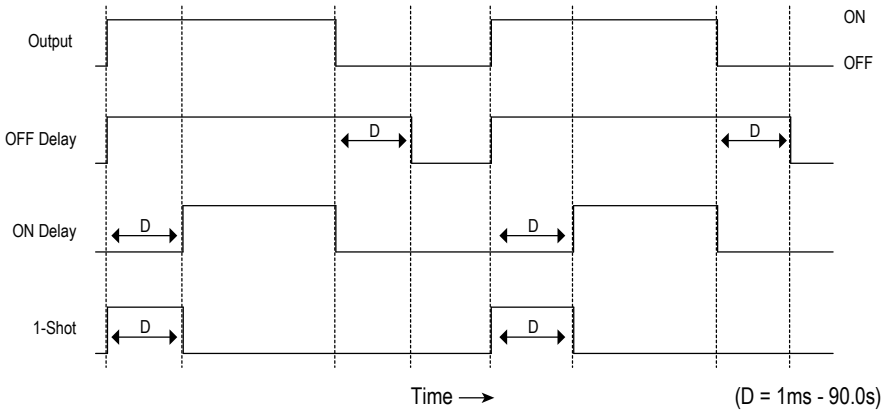

When one of the timing delay options is chosen, the sensor returns to the Setup menu and additional options become available to set the parameter(s):

dLAY

ond—On delay

oFd—Off delay

1Sho

dt2—One-shot delay timer

For the one-shot delay timer:

LO = On pulse when a target is detected inside of the switch point(s)

DO = On pulse when a target is detected outside of the switch point(s)

totL

dt2—Output duration

tot2—Number of counts before an output change

Delay Timers

Use these menus to set the delay timers. These menus are available only if an output timing delay is selected.

For **ond** and **oFd**, the default is 0.

For **dt2**, the default is 10 milliseconds for all response speeds.

Use **+** and **-** to scroll through the values. Millisecond values do not include the decimal point; seconds values include the decimal point.

Value: 1 ms to 90 s or 10 ms to 90 s, depending on response speed setting.

Totalizer (totL)

The totalizer function changes the output only after counting a designated number of targets.

After selecting this function, **dt2** becomes available to define the output duration and **tot2** to define required number of counts before the output changes.

For **tot2**, the default is 1 count and the maximum is 9999 counts.

For **dt2**, the default is 10 milliseconds. Use **+** and **-** to scroll through the values. Values in millisecond do not include the decimal point; values in seconds include the decimal point.

Values include 1 ms to 90 s or 10 ms to 90 s, depending on the response speed setting.

From Run mode, press **SELECT** to change the display to show the current totalizer count. Pressing **SELECT** again changes the display back to the measured distance.

The totalizer count automatically resets after re-teaching the switch point distance or turning the sensor off.

© Banner Engineering Corp.

Hysteresis (hYS2)

Use this menu to set the hysteresis distance around the switch point.

Auto (The sensor automatically selects a recommended minimum hysteresis distance relative to the current switch point distance) to 300 (enter a user-selectable value (cm) of hysteresis distance relative to the current switch point distance).

Set Distance—The distance from the reference surface that allows stable use, including the effects of temperature and voltage, to the (standard) sensing object transit position. This is approximately 70% to 80% of the normal (rated) sensing distance.

Set distance

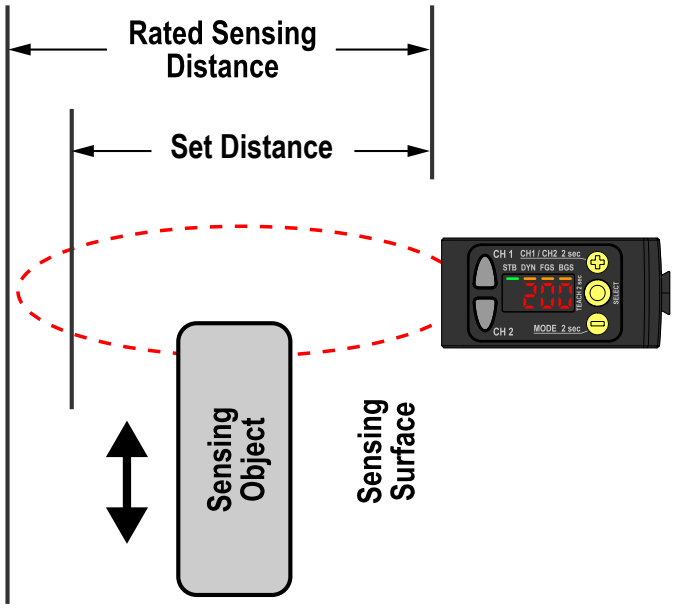

Hysteresis (Differential Travel)—With respect to the distance between the standard sensing object and the sensor, the difference between the distance at which the sensor operates and the distance at which the sensor resets.

Hysteresis (differential travel)

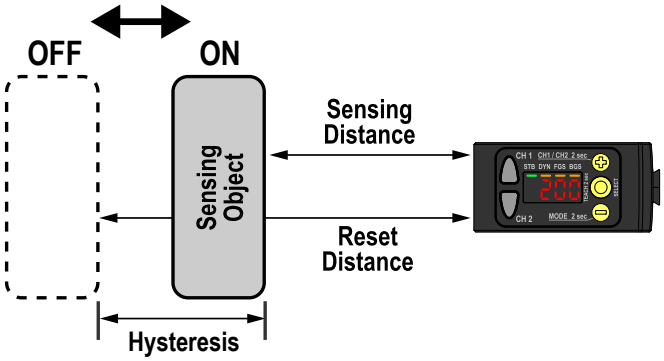

Smaller hysteresis values cause the output to switch state with less differential travel. A larger hysteresis value makes the output state to remain unchanged with larger differential travel. Negative hysteresis values allow the operator to move the hysteresis to either side of the switch point.

Zero Reference Location (ZEro)

Use this menu to select the zero-reference location. Changing the zero-reference location only affects the readout on the display and does not affect the output.

The default is **nEAr**, 0 = the front of the sensor. This menu is not available in dual (intensity + distance) mode.

© Banner Engineering Corp.

nEAr —0 is the front of the sensor and the measurement increases further from the sensor.

FAr —0 is the maximum range and the measurement increases closer to the sensor.

Shift the Zero Reference Location after a TEACH (ShFt)

Use this menu to select whether the sensor shifts the zero-reference location based on the last TEACH process.

The default is **oFF**, 0 = the front of the sensor or the maximum range. This menu is not available in dual (intensity + distance) mode.

- on —Shift the zero-reference location to one of the taught positions with each TEACH
- oFF —0 = the front of the sensor or the maximum range, depending on the **ZEro** setting

This figure illustrates three examples of how changes to the zero and shift settings affect what distance readout is shown on the display when in 2-pt TEACH mode. Changes to the zero setting affect the direction in which the distance increases. Shifting the zero reference location only affects the readout on the display and does not affect the output.

Example Zero and Shift settings

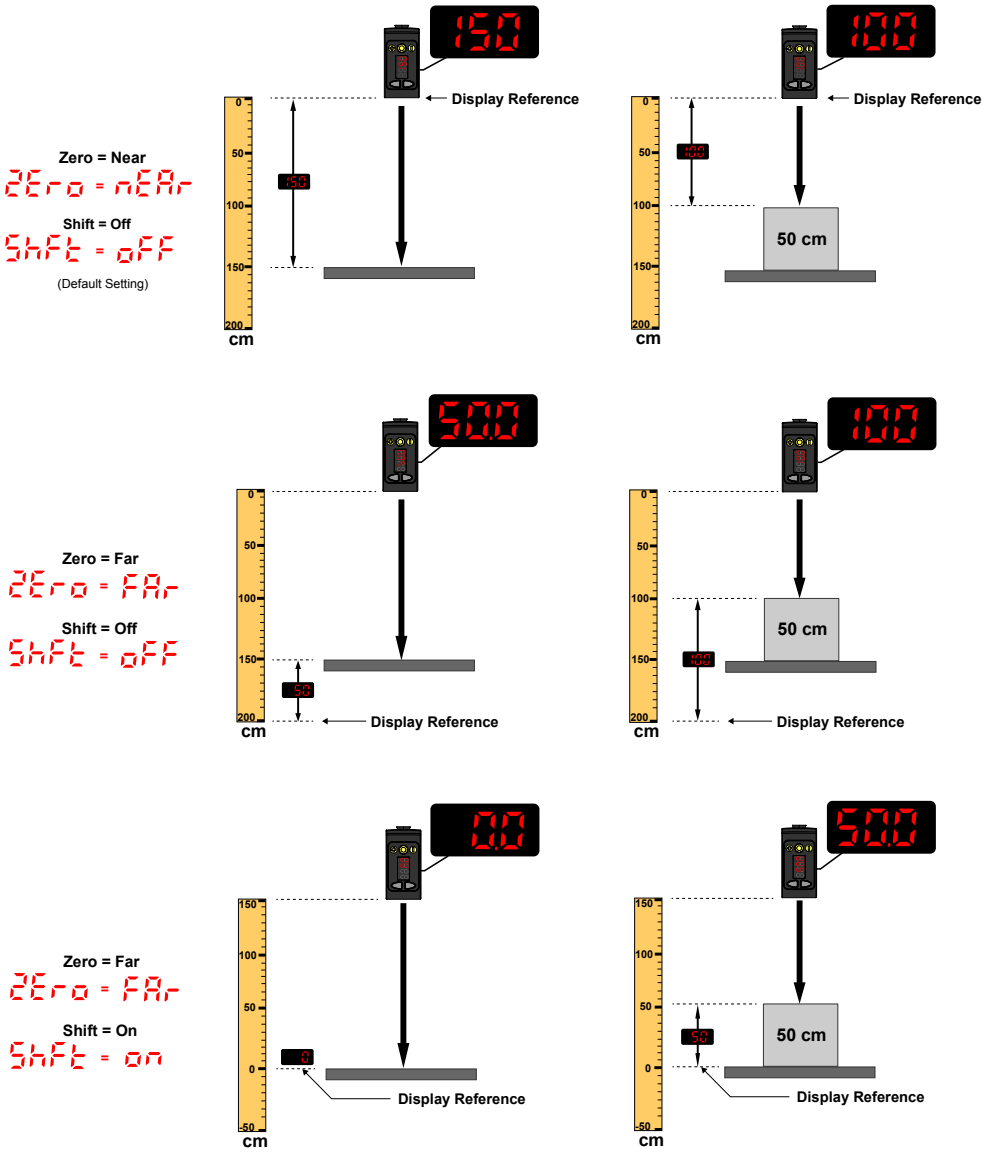

© Banner Engineering Corp.

Offset (oFS1 or oFS2)

Use this menu to set an offset from the taught surface during a TEACH procedure. This menu is available only if one-point window (foreground suppression) mode or one-point background suppression mode is selected.

For Channel 2, the output must be set to light operate or dark operate.

The number that follows on the display indicates which channel is selected.

The offset is automatically calculated or manually defined as a consistently applied value. **Auto** is the default option. Use +/- to select a value. Values increase or decrease by up to 291 cm for 3000 mm models.

For BGS mode, the default is **Auto** because the Q5X automatically selects where to position the switch point. For FGS mode, the default is 0 because the window is centered around the taught target.

A positive offset value always shifts the switch point location or the FGS window towards the sensor.

The taught surface must be inside of the defined sensing range. When the teach mode is set to FGS, some portion of the window must be located within the sensing range. When the teach mode is set to BGS, the offset value must be within the defined sensing range. If an offset value falls outside of the sensing range, a message displays. See the applicable TEACH procedure for more information.

Display View (diSP)

Use this menu to select the display view.

When the sensor is in sleep mode, the display wakes with the first button press.

1234 —Normal (default setting). When **1234** is inverted, the display is in inverted view model (rotated 180°).

oFF —Normal and the display enters sleep mode after 60 seconds. When **oFF** is inverted, the display view is inverted (rotated 180°) and the display enters sleep mode after 60 seconds.

Units (unIt)

Use this menu to set the displayed units to centimeters (cm), inches ("), millimeters (mm).

cñ—centimeter (with a decimal point at < 60 centimeters)

in—inch (with a decimal point at < 24 inches)

ññ— millimeter

Output Type Polarity (PoL)

Use this menu to select the output polarity.

dEF (Default)—Push-Pull IO-Link on pin 4

PnP—Solid state PNP on pin 4

nPn—Solid state NPN on pin 4

Exit Setup Mode (End)

Use this menu to end Setup mode.

Navigate to **End** and press **SELECT** to exit Setup mode and return to Run mode.

Reset to Factory Defaults

Use this menu to restore the sensor to the factory default settings.

no —Select to return to the sensor menu without restoring the defaults.

YES —Select to apply the factory defaults and return to Run mode.

© Banner Engineering Corp.

Factory Default Settings for the Q5X Analog with IO-Link

Factory default settings

Setting	Factory Default
TEACH Mode	Two-point TEACH
Response Speed	3.0 ms
Averaging	Average 1 measurement for analog output
Slope	Positive slope
Zero Reference Location	Zero displayed at the front of the sensor
Zero Reference Location after a TEACH	Zero point is at the front of the sensor or maximum detection range
Display Units	Centimeters (with decimal point at < 60 cm)
Output Type Polarity	IO-Link on pin 4
Loss of Signal	3.5 mA (current models) 0 V (voltage models)
Input Wire Function	Remote TEACH input inactive
Trigger Mode	Average measurement
Display Read	Display on
Ch2 Output	Light operate
Ch2 Adaptive Tracking	Adaptive tracking off
Ch2 Window Size	Automatic
Ch2 Output Timing Delays	No delays enabled

Manual Adjustments

Manually adjust the sensor switch point using the **+** and **-** buttons.

1. From Run mode, press either **+** or **-** one time.

   The selected channel displays briefly, then the current switch point value flashes slowly.

2. Press **+** to move the switch point up or **-** to move the switch point down.

   After 1 second of inactivity, the new switch point value flashes rapidly, the new setting is accepted, and the sensor returns to Run mode.

NOTE: When FGS mode is selected, manual adjustment moves both sides of the symmetrical threshold window simultaneously, expanding and collapsing the window size. Manual adjustment does not move the center point of the window.

NOTE: When dual mode is selected, after the TEACH process is completed, use the manual adjustment to adjust the sensitivity of the thresholds around the taught reference point. The taught reference point is a combination of the measured distance and returned signal intensity from the reference target. Manual adjustment does not move the taught reference point, but pressing **+** increases the sensitivity, and pressing **-** decreases the sensitivity. When re-positioning the sensor or changing the reference target, re-teach the sensor.

Remote Input

Remote input is available from the Channel 1 menu. Set **inPt** to **Set**.

© Banner Engineering Corp.

The remote input provides limited programming options. Connect the gray wire to 24 V DC with a remote switch connected between the wire and ground. Pulse the remote input according to the diagram and the instructions provided in this manual.

The remote input will be either active high or active low depending on the polarity setting. If the polarity is set to def or PNP, the remote input is active high. If the polarity is set to NPN, the remote input is active low.

The length of the individual programming pulses is equal to the value T where 0.04 seconds ≤ T ≤ 0.8 seconds.

Exit remote programming modes by activating the remote input for longer than 2 seconds.

Remote Input Map

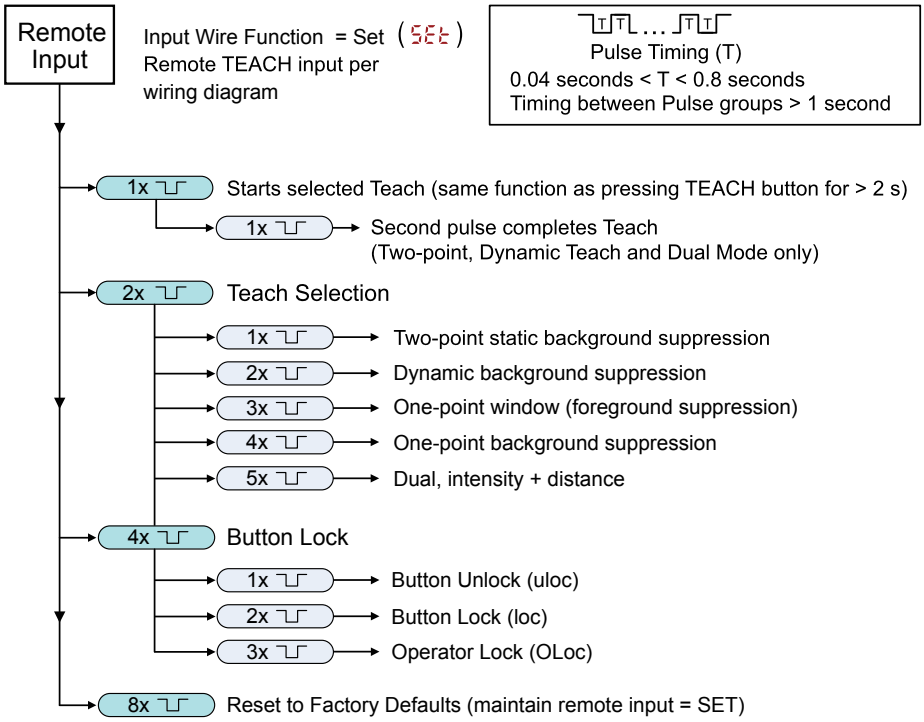

Select the TEACH Mode Using the Remote Input

Follow the instructions below to choose a specific TEACH Mode using Remote Input.

1. Access the TEACH selection.

Action		Result
Double-pulse the remote input.	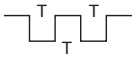	**tch** displays.

2. Select the desired TEACH mode.

Action			Result
Pulses		**TEACH Mode**	
1		Two-point static background suppression	The selected TEACH method displays for a few seconds and the sensor returns to Run mode.

Continued on page 36

© Banner Engineering Corp.

Continued from page 35

Action			Result
Pulses		TEACH Mode	
2	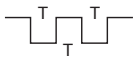	Dynamic background suppression	
3	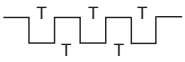	One-point window (foreground suppression)	
4	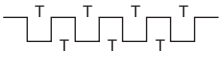	One-point background suppression	
5	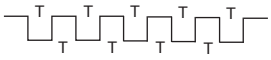	Dual (intensity + distance)	

Reset to Factory Defaults Using the Remote Input

Follow the instructions below to reset the Q5X to factory defaults using Remote Input.

Eight-pulse the remote input to apply the factory defaults and return to Run mode.

The input wire function remains at remote teach input (**SEt**).

Locking and Unlocking the Sensor Buttons

Use the lock and unlock feature to prevent unauthorized or accidental programming changes.

uLoc—The sensor is unlocked and all settings can be modified (default).

Loc— The sensor is locked and no changes can be made.

0Loc—The switch point value can be changed by teaching or manual adjustment, but no sensor settings can be changed through the menu.

> **NOTE:** When the sensor is in either **Loc** or **0Loc** mode, the active channel can be changed using **(+)(CH1/CH2)**
> .

When in **Loc** mode, **Loc** displays when the **(SELECT)(TEACH)** button is pressed. The switch point displays when **(+)(CH1/CH2)** or **(-)(MODE)** are pressed, but **Loc** displays if the buttons are pressed and held.

When in **0Loc** mode, **Loc** displays when **(-)(MODE)** is pressed and held. To access the manual adjust options, briefly press and release **(+)(CH1/CH2)** or **(-)(MODE)**. To enter TEACH mode, press the **(SELECT)(TEACH)** button and hold for longer than 2 seconds.

Button Instructions

To enter **Loc** mode, hold **+** and press **-** four times. To enter **0Loc** mode, hold **+** and press **-** seven times. Holding **+** and pressing **-** four times unlocks the sensor from either lock mode and the sensor displays **uLoc**.

Remote Input Instructions

1. Access the remote input.

© Banner Engineering Corp.

Action		Result
Four-pulse the remote input.	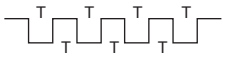	The sensor is ready to have the button state defined and **btn** displays.

2. Lock or unlock the sensor buttons.

Action		Result
Single-pulse the remote input to unlock the sensor.		**uLoc** displays and the sensor returns to Run mode.
Double-pulse the remote input to lock the sensor.	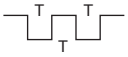	**Loc** displays and the sensor returns to Run mode.
Triple-pulse the remote input to apply the operator lock to the sensor		**0Loc** displays and the sensor returns to Run mode

Sync Master/Slave

Two Q5X sensors may be used together in a single sensing application. To eliminate crosstalk between the two sensors, configure one sensor to be the master and one to be the slave. In this mode, the sensors alternate taking measurements and the response speed doubles.

The master sensor and the slave sensor must be programmed for the same Response Speed and Gain and Sensitivity settings. The master sensor and slave sensor must share a common power source.

1. Configure the first sensor as the master; navigate: **inPt › nASt**.
2. Configure the second sensor as the slave; navigate: **inPt › SLUE**.
3. Connect the gray wires of the two sensors together.

© Banner Engineering Corp.

Blank page

Chapter Contents

Chapter 4 IO-Link Interface

IO-Link is a point-to-point communication link between a master device and sensor. Use IO-Link to parameterize sensors and transmit process data automatically.

For the latest IO-Link protocol and specifications, see www.io-link.com.

Each IO-Link device has an IODD (IO Device Description) file that contains information about the manufacturer, article number, functionality etc. This information can be easily read and processed by the user. Each device can be unambiguously identified via the IODD as well as via an internal device ID. Download the Q5X's IO-Link IODD package (p/n 215345) from Banner Engineering's website at www.bannerengineering.com.

Banner has also developed Add On Instruction (AOI) files to simplify ease-of-use between the Q5X, multiple third-party vendors' IO-Link masters, and the Logix Designer software package for Rockwell Automation PLCs. Three types of AOI files for Rockwell Allen-Bradley PLCs are listed below. These files and more information can be found at www.bannerengineering.com.

Process Data AOIs—These files can be used alone, without the need for any other IO-Link AOIs. The job of a Process Data AOI is to intelligently parse out the Process Data word(s) in separate pieces of information. All that is required to make use of this AOI is an EtherNet/IP connection to the IO-Link Master and knowledge of where the Process Data registers are located for each port.

Parameter Data AOIs—These files require the use of an associated IO-Link Master AOI. The job of a Parameter Data AOI, when working in conjunction with the IO-Link Master AOI, is to provide quasi-realtime read/write access to all IO-Link parameter data in the sensor. Each Parameter Data AOI is specific to a given sensor or device.

IO-Link Master AOIs—These files require the use of one or more associated Parameter Data AOIs. The job of an IO-Link Master AOI is to translate the desired IO-Link read/write requests, made by the Parameter Data AOI, into the format a specific IO-Link Master requires. Each IO-Link Master AOI is customized for a given brand of IO-Link Master.

Add and configure the relevant Banner IO-Link Master AOI in your ladder logic program first; then add and configure Banner IO-Link Device AOIs as desired, linking them to the Master AOI as shown in the relevant AOI documentation.

© Banner Engineering Corp.

Blank page

Chapter Contents

Dimensions 43
Typical Performance Curves 43

Chapter 5 Specifications

Sensing Beam
IEC 60825-1:2014
Visible red Class 2 laser models, 650 nm

Supply Voltage (Vcc)
12 to 30 V DC (Class 2 supply) (10% max ripple within limits)

Supply Protection Circuitry
Protected against reverse polarity and transient overvoltages

Power and Current Consumption, exclusive of load
< 1 W

Sensing Range
95 mm to 3000 mm (3.74 in to 118.11 in)

Output Configuration
Channel 1: Analog output
Channel 2: Configurable PNP/NPN discrete output or IO-Link

Response Speed
Total response speed varies between 0.5 ms and 2270 ms, depending on base measurement rate and averaging settings.
For more information, see "Averaging " on page 28.

Boresighting
± 65 mm at 3000 mm

Delay at Power Up
< 2.5 s

Maximum Torque
Side mounting: 1 N·m (9 in·lbs)

Ambient Light Immunity
5000 lux at 1 m
2000 lux at 2 m

Connector
Integral 5-pin M12 male quick-disconnect connector

Construction
Housing: ABS
Lens cover: PMMA acrylic
Lightpipe and display window: polycarbonate

Excess Gain

Temperature Effect (Typical)
< 0.5 mm/°C at < 500 mm
< 1.0 mm/°C at < 1000 mm
< 2.0 mm/°C at < 2000 mm
< 5.0 mm/°C at < 3000mm

Remote Input
Allowable Input Voltage Range: 0 to Vsupply
Active High (internal weak pull-down): High state > (Vsupply – 2.25 V) at 2 mA maximum
Active Low (internal weak pull-up): Low state < 2.25 V at 2 mA maximum

IO-Link Interface
IO Link Revision V1.1
Smart Sensor Profile: Yes
Baud Rate: 38400 bps
Process Data In Length: 32 bits
Process Data Out Length: 8 bits
Minimum Cycle Time: 3.6 ms
IODD files: Provides all programming options of the display, plus additional functionality.

Application Note
For optimum performance, allow 10 minutes for the sensor to warm up

Environmental Rating
IP67 per IEC60529

Vibration
MIL-STD-202G, Method 201A (Vibration: 10 Hz to 55 Hz, 0.06 inch (1.52 mm) double amplitude, 2 hours each along X, Y and Z axes), with device operating

Shock
MIL-STD-202G, Method 213B, Condition I (100G 6x along X, Y, and Z axes, 18 shocks), with device operating

Operating Conditions
–10 °C to +50 °C (+14 °F to +122 °F)
35% to 95% relative humidity

Storage Temperature
–25 °C to +70 °C (–13 °F to +158 °F)

Base Measurement Rate (ms)	Base Measurement Rate in Sync Mode (ms)	Ambient Light Rejection	Excess Gain (90% White Card)				
			at 100 mm	at 500 mm	at 1000 mm	at 2000 mm	at 3000 mm
0.5	1.0	Disabled	200	80	25	6	3

Continued on page 42

© Banner Engineering Corp.

Continued from page 41

Base Measurement Rate (ms)	Base Measurement Rate in Sync Mode (ms)	Ambient Light Rejection	Excess Gain (90% White Card)				
			at 100 mm	at 500 mm	at 1000 mm	at 2000 mm	at 3000 mm
1.0	2.0	Enabled	200	80	25	6	3
2.0	4.0	Enabled	920	400	100	25	12
3.0	6.0	Enabled	1600	700	200	50	25
5.0	10.0	Enabled	3200	1400	400	100	50

Discrete Output Rating

Current rating: 50 mA maximum

Black wire specifications per configuration		
IO-Link Push/Pull	Output High:	≥ Vsupply - 2.5 V
	Output Low:	≤ 2.5 V
PNP	Output High:	≥ Vsupply - 2.5 V
	Output Low:	≤ 1V (loads ≤ 1 MegΩ)
NPN	Output High:	≥ Vsupply - 2.5 V (loads ≤ 50 kΩ)
	Output Low:	≤ 2.5 V

White wire specifications per configuration	
Q5XKU... models	0–10 V DC, 1000 Ohm minimum
Q5XKI... models	4–20 mA DC, 300 Ohm maximum

Discrete Output Distance Repeatability

Distance (mm)	Repeatability
95 to 300	± 0.5 mm
300 to 1000	± 0.25%
1000 to 2000	± 0.5%
2000 to 3000	± 1.0%

Beam Spot Size

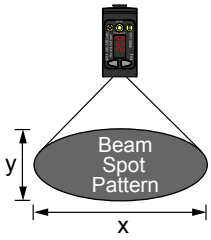

Distance (mm)	Size (x × y) (mm)
100	2.6 × 1.5
1000	4.2 × 2.5
2000	6 × 3.6
2000 to 3000	7.8 × 4.7

Beam spot size is calculated as 1.6 times the D4σ measured value

Required Overcurrent Protection

WARNING: Electrical connections must be made by qualified personnel in accordance with local and national electrical codes and regulations.

Overcurrent protection is required to be provided by end product application per the supplied table.

Overcurrent protection may be provided with external fusing or via Current Limiting, Class 2 Power Supply.

Supply wiring leads < 24 AWG shall not be spliced.

For additional product support, go to www.bannerengineering.com.

Supply Wiring (AWG)	Required Overcurrent Protection (A)	Supply Wiring (AWG)	Required Overcurrent Protection (A)
20	5.0	26	1.0
22	3.0	28	0.8
24	1.0	30	0.5

Certifications

Banner Engineering BV
Park Lane, Culliganlaan 2F bus 3
1831 Diegem, BELGIUM

Turck Banner LTD Blenheim House
Blenheim Court
Wickford, Essex SS11 8YT
GREAT BRITAIN

c UL us LISTED Industrial Control Equipment 3TJJ

Class 2 power; UL Environmental Rating: Type 1

IO-Link®

© Banner Engineering Corp.

Dimensions

All measurements are listed in millimeters [inches], unless noted otherwise.

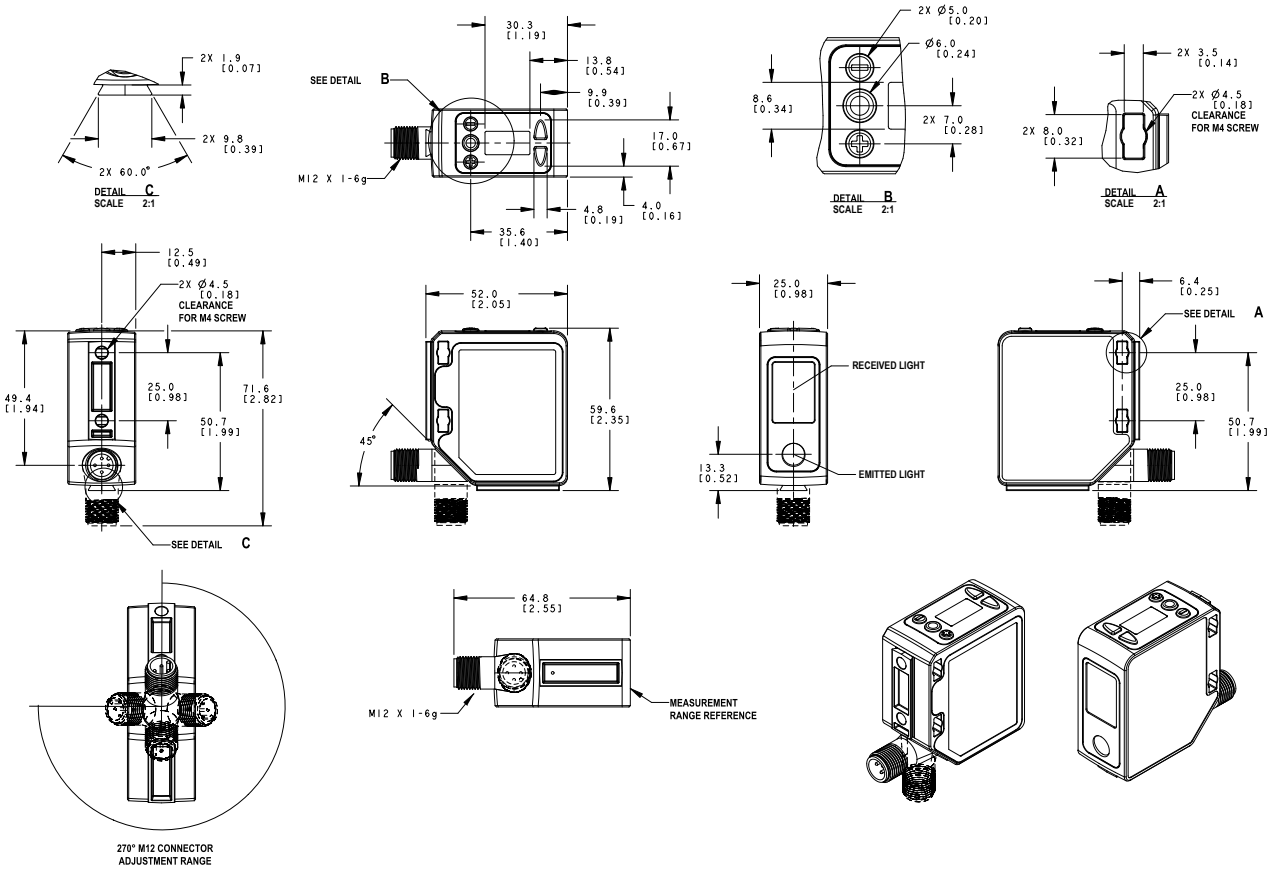

Typical Performance Curves

Minimum Object Separation Distance (90% to 6% reflectance) for the 3000 mm Models

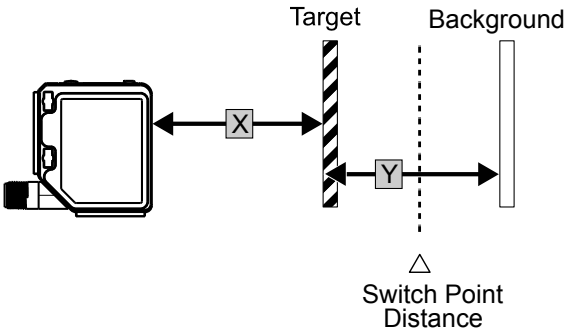

Discrete Minimum Object Separation (Uniform and Non-Uniform)

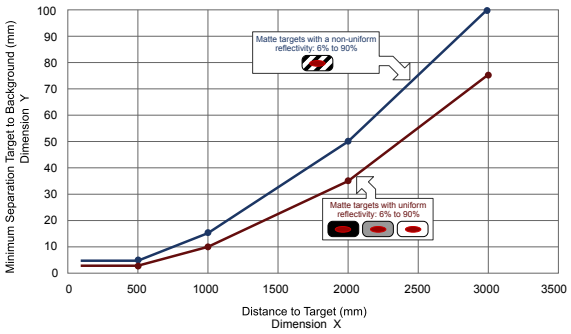

© Banner Engineering Corp.

Accuracy (90% to 6% Reflectance)

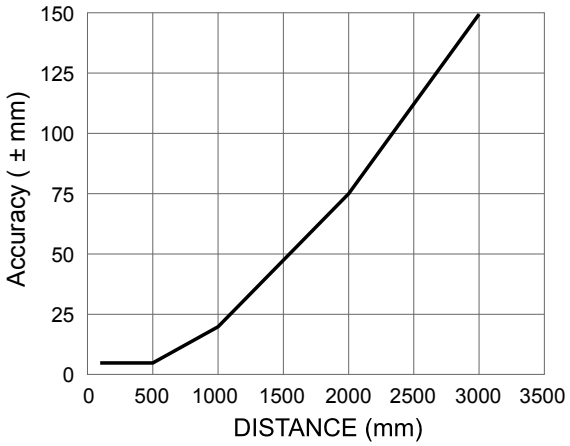

Repeatability (90% to 6% Reflectance)

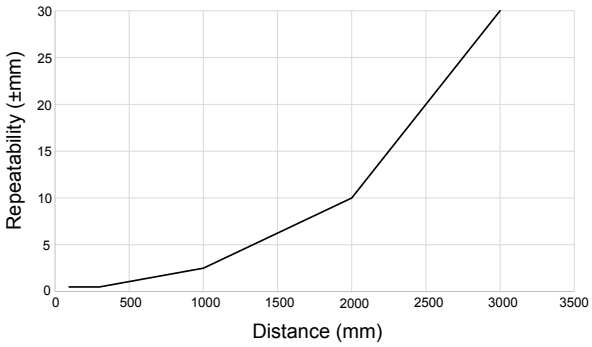

Temperature Effects (90% to 6% Reflectance)

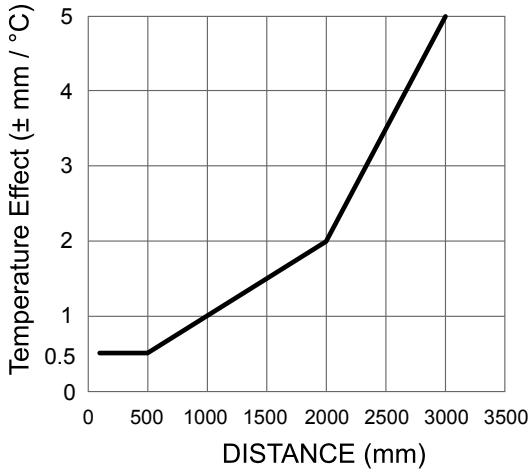

© Banner Engineering Corp.

Chapter Contents

Dual (Intensity + Distance) Mode 45
Dual Mode Reference Surface Considerations 46
Dual Mode Considerations for Clear and Transparent Object Detection 46
Abbreviations 47

Chapter 6 Additional Information

Dual (Intensity + Distance) Mode

Dual TEACH mode, dual intensity + distance window, expands the applications the Q5X can solve by combining distance-based detection with light intensity thresholds.

In background suppression (DYN, 1-pt, 2-pt) and foreground suppression (FGS) TEACH modes, the Q5X sensor compares changes in the measured distance between the sensor and target to control the output state. In dual TEACH mode, the user teaches the Q5X a fixed reference surface, and the sensor compares intensity and distance readings against the reference surface it was taught. After teaching the reference target, the displayed value is calibrated to 100P, or a 100% match. When an object enters the sensor's field of view, the degree of consistency with the reference surface becomes lower and causes a change in sensor output.

In dual mode, you can detect when the target is present at the right distance and when it returns the right amount of light. This is useful in error-proofing applications where you need to know not only that the part is present (distance), but also that it is the correct part (intensity).

In dual mode, the Q5X requires a reference surface (far left). Once taught, the distance and intensity of the reference surface are recorded and used as a baseline. A user-adjustable switching threshold is set, and changes in distance and/or intensity outside the switching threshold creates a sensor output change. The example uses a 90% (90P) match condition with a 10% change in intensity and/or distance from the reference surface required to change the output state. The default-switching threshold is a 50% match to the reference condition (50P); this sets the threshold 50% from the distance and intensity of the reference surface. A transparent object can be detected either by a change in intensity, distance, or by a double peak reflection (far right).

Dual Mode Example

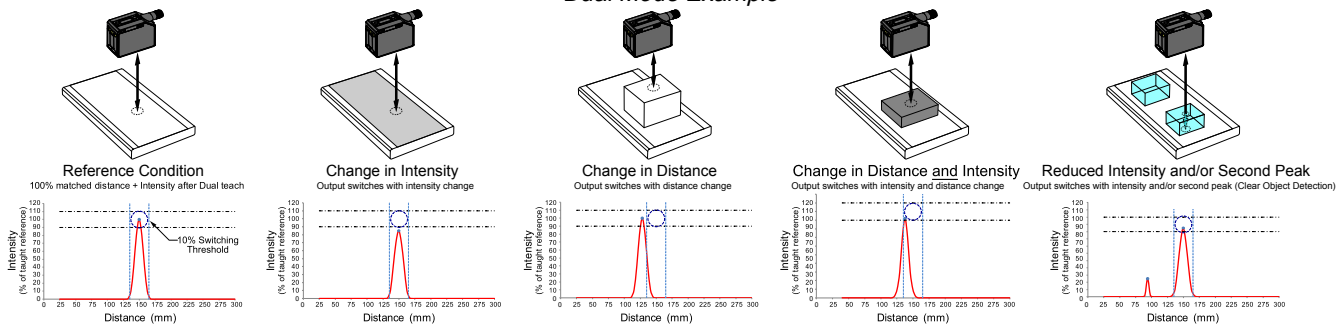

The Q5X sensor can be taught non-ideal reference surfaces, such as surfaces outside of the sensor's range, very dark surfaces, or even empty space. These situations may enable applications requiring a long range detection but are subject to typical diffuse mode detection challenges.

© Banner Engineering Corp.

Dual Mode Reference Surface Considerations

Optimize reliable detection by applying these principles when selecting your reference surface, positioning your sensor relative to the reference surface, and presenting your target.

The robust detection capabilities of the Q5X allows successful detection even under non-ideal conditions in many cases. Typical reference surfaces are metal machine frames, conveyor side rails, or mounted plastic targets. Contact Banner Engineering if you require assistance setting up a stable reference surface in your application.

1. Select a reference surface with these characteristics where possible:
    - Matte or diffuse surface finish
    - Fixed surface with no vibration
    - Dry surface with no build-up of oil, water, or dust
2. Position the reference surface between 200 mm (20 cm) and the maximum sensing range.
3. Position the target to be detected as close to the sensor as possible, and as far away from the reference surface as possible.
4. Angle the sensing beam relative to the target and relative to the reference surface 10 degrees or more.

Dual Mode Considerations for Clear and Transparent Object Detection

The Q5X is able to detect the very small changes caused by transparent and clear objects. A transparent object can be detected either by a change in intensity, distance, or by a double-peak reflection.

The Q5X sensor can be taught non-ideal reference surfaces, such as surfaces outside of the sensor range or very dark surfaces. Teaching non-ideal reference surfaces may enable applications other than transparent or clear object detection, but best results for transparent or clear object detection require a stable reference surface.

The display shows the match percentage to the taught reference point. The user adjustable switch point defines the sensitivity and the output switches when the match percentage to the reference point crosses the switch point. Your specific application may require fine tuning of the switch point, but these values are the recommended starting values:

Match percentage to taught reference point

Switch point (%)	Typical Applications
50 (default)	Default, recommended for PET bottles and Trays
88	Recommended for thin films
50	Recommended for tinted brown, tinted green, or water-filled containers

© Banner Engineering Corp.

Example mounting considerations

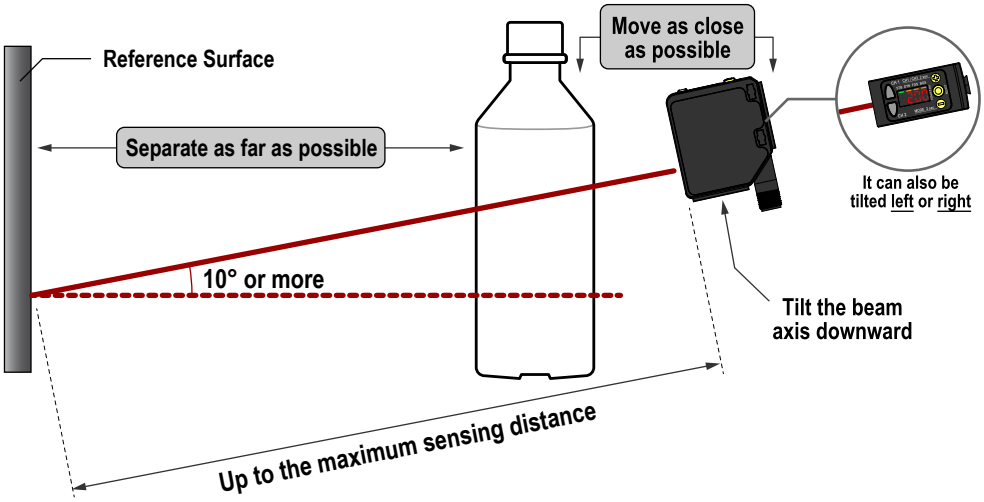

Common problems and solutions for detecting clear objects—Object too close

PROBLEM:
The object is close to the reference surface

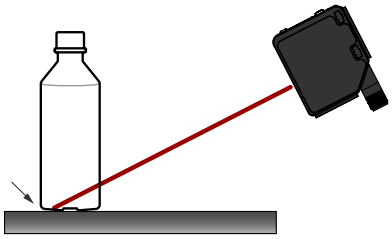

SOLUTION:
Move the target closer to the sensor

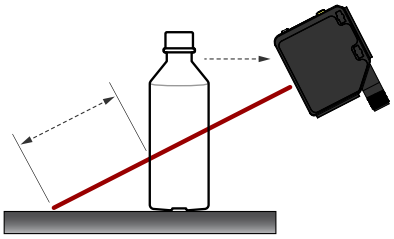

Common problems and solutions for detecting clear objects—Sensor too far

PROBLEM:
The sensor is far from the object

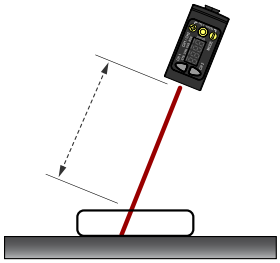

SOLUTION:
Move the sensor closer to the target

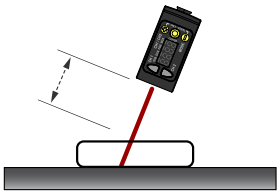

Abbreviations

The following table describes the abbreviations used on the sensor display and in this manual.

Sensor display definitions

Abbreviation	Description
- - - -	No valid signal in range

Continued on page 48

© Banner Engineering Corp.

Continued from page 47

Abbreviation	Description
9999P	The sensor has not been taught
1Sho	One-shot
1St	First
2nd	Second
2-Pt	Two-point TEACH (static background suppression)
Auto	Automatic
bGS	One-point background suppression
btn	Button
CnCL	Cancel
coMP	Complementary output
d.SP	Display read
dLAY	Delay
dLY1 , dLY2	Output timing delay (Channel 1, Channel 2)
do	Dark operate
dt1 , dt2	Delay timer (Channel 1, Channel 2)
duAL	Dual mode
dYn	Dynamic background suppression
End	End—exit the sensor menu
FAr	Far zero reference location—the maximum range is 0 and the measurement increase as the target moves closer to the sensor

Continued on page 49

© Banner Engineering Corp.

Continued from page 48

Abbreviation	Description
FOS	One-point window (foreground suppression)
FuLL	Full range
GAin	Excess gain
hiGh	High excess gain mode
hS	High speed tracking
hYS	Hysteresis
Lo	Light operate
L on	Laser on
Loc	Lock/locked
LoFF	Laser off
MASt	Master
nEAr	Near zero reference location—the front of the sensor is 0 and the measurement increase as the target moves further away from the sensor
obJt	Object
oFd1, oFd2	Off delay timer (Channel 1, Channel 2)
oFF	Off
oFS1, oFS2	Offset (Channel 1, Channel 2)
oFSt	An applied offset resulted in an invalid switch point
on	On
ond1, ond2	On delay timer (Channel 1, Channel 2)
out1, out2	Output (Channel 1, Channel 2)
PoL	Output type polarity

Continued on page 50

© Banner Engineering Corp.

Continued from page 49

Abbreviation	Description
PuLS	Pulse frequency modulation
rSEt	Reset to factory defaults
SAUE	Save
SEt	Set or Input wire = remote teach function
SHFt	Shift the Zero Reference Location after a TEACH
SLUE	Slave
SPd	Response speed
Std	Standard excess gain mode
Strt	Start
StoP	Stop
tch1, tch2	TEACH process selection (Channel 1, Channel 2)
totL	Totalizer
tot1, tot2	Total counts
uLoc	Unlock/unlocked
unit	Unit
uuuu	Saturated signal (too much light)
Wnd1, Wnd2	Window size (Channel 1, Channel 2)
YES	Yes
zEro	Zero—select the zero reference location

© Banner Engineering Corp.

Chapter Contents

Cordsets 51
Brackets 52
Reference Targets 53
RSD1 Remote Display 54

Chapter 7 Accessories

Cordsets

5-Pin Threaded M12 Cordsets with Shield—Single Ended

Model	Length	Style	Dimensions	Pinout (Female)
MQDEC2-506	2 m (6.56 ft)	Straight	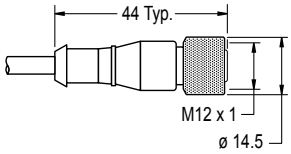	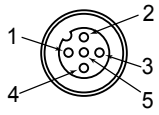 1 = Brown 2 = White 3 = Blue 4 = Black 5 = Gray
MQDEC2-515	5 m (16.4 ft)			
MQDEC2-530	9 m (29.5 ft)			
MQDEC2-550	15 m (49.2 ft)			
MQDEC2-575	23 m (75.44 ft)			
MQDEC2-5100	30.5 m (100 ft)			
MQDEC2-506RA	2 m (6.56 ft)	Right-Angle	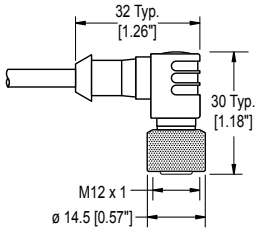	
MQDEC2-515RA	5 m (16.4 ft)			
MQDEC2-530RA	9 m (29.5 ft)			
MQDEC2-550RA	15 m (49.2 ft)			
MQDEC2-575RA	23 m (75.44 ft)			
MQDEC2-5100RA	31 m (101.68 ft)			

5-Pin Male Threaded and 5-Pin Female Quick Disconnect M12 Cordset with Shield—Double Ended

Model	Length "L1"	Style	Pinout (Male)	Pinout (Female)
MQDEC3-503SS	0.91 m (2.99 ft)	Female Straight/Male Straight	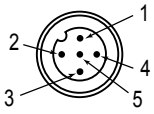	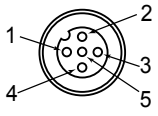
MQDEC3-506SS	1.83 m (6 ft)			
MQDEC3-515SS	4.58 m (15 ft)			
MQDEC3-530SS	9.2 m (30.2 ft)			
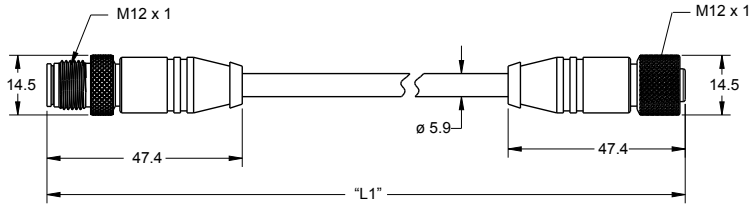			1 = Brown 2 = White 3 = Blue	4 = Black 5 = Gray

© Banner Engineering Corp.

Brackets

All measurements are listed in millimeters, unless noted otherwise.

SMBQ5X..

- Swivel bracket with tilt and pan movement for precision adjustment
- Easy sensor mounting to extruded rail T-slots
- Metric and inch size bolts are available
- Side mounting of some sensors with the 3 mm screws included with the sensor

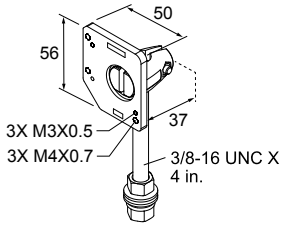

B = 7 × M3 × 0.5

Bolt thread (A): 3/8 - 16 × 2¼ in for SMBQ5XFA: M10 - 1.5 × 50 for SMBQ5XFAM10; n/a; no bolt included. Mounts directly to 12 mm (½ in) rods for SMBQ5XFAM12

SMBAMSQ5XIPRA

- Enclosed bracket
- 13-ga. Stainless steel with borosilicate glass window
- Right angle mount plate

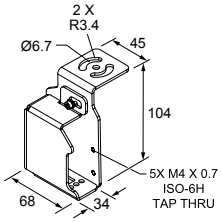

SMBAMSQ5XIPP

- Enclosed bracket
- 13-ga stainless steel with a borosilicate glass window
- Flat mount plate

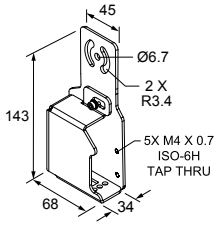

SMBQ5XDT

- Clamp bracket mounts to sensor dovetail
- Translation adjustment for sensor alignment
- Aluminum clamp - 6.5mm maximum plate thickness

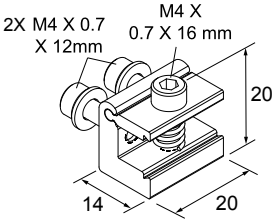

© Banner Engineering Corp.

SMBAMSQ5XP
- Flat SMBAMS series bracket
- Articulation slots for 30 deg rotation
- 13-ga. 304 stainless steel

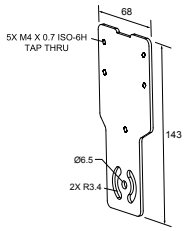

SMBAMSQ5XRA
- Right-angle SMBAMS series bracket
- Articulation slots for 30 deg rotation
- 13-ga. 304 stainless steel

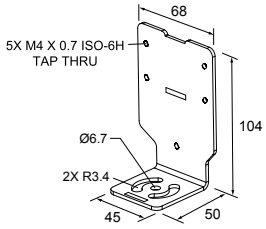

SMBQ5XM4F
- Fixing plates for mounting to back of sensor
- Stainless steel plates
- Customer supplied mounting plate thickness minimum 2 mm maximum 4 mm with screws included in kit

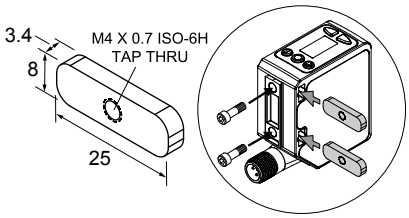

Reference Targets

All measurements are listed in millimeters, unless noted otherwise.

BRT-Q4X-60X18
- Reference target for clear object detection or dual-mode applications
- FDA grade acetal material

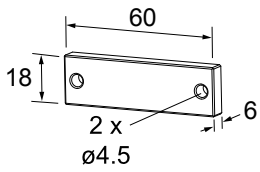

BRT-Q4X-60X50
- Reference target for clear object detection or dual-mode applications
- FDA grade acetal material

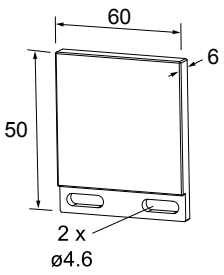

© Banner Engineering Corp.

RSD1 Remote Display

Use the optional RSD1 for remote monitoring and configuring compatible devices.

Refer to the RSD1 instruction manual (p/n 199621) or quick start guide (p/n 199622) for more information. See "Accessories" on page 51 for the required cordsets.

RSD1 Remote Display				
Model	**Output A and B**	**Dimensions**	**Male**	**Wiring**
RSD1QP	Configurable	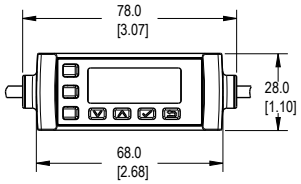	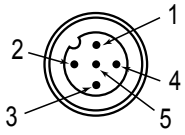	1. Brown 2. White 3. Blue 4. Black 5. Gray

© Banner Engineering Corp.

Chapter Contents

Troubleshooting 55
Contact Us 55
FCC Part 15 Class A 55
Industry Canada Class A 56
Banner Engineering Corp Limited Warranty 56
..... 56

Chapter 8 Product Support and Maintenance

Troubleshooting

Use the following table to correct any error codes that appear in the Q5X.

Error Codes

Error Code	Description	Resolution
- - - -	No valid signal in range	Reposition the sensor or the target
uuuu	The signal is saturated (too much light)	Reposition the sensor or the target to increase the detection distance, or increase the angle of incidence between the sensor and the target
Err E	EEPROM fault	Contact Banner Engineering to resolve
Err L	Laser fault	Contact Banner Engineering to resolve
Err C	Output short-circuited	Check the wiring for an electrical short circuit and to ensure that the wiring is correct
Err S	System fault	Contact Banner Engineering to resolve

Contact Us

Banner Engineering Corp. headquarters is located at: 9714 Tenth Avenue North | Minneapolis, MN 55441, USA | Phone: + 1 888 373 6767

For worldwide locations and local representatives, visit www.bannerengineering.com.

FCC Part 15 Class A

This equipment has been tested and found to comply with the limits for a Class A digital device, pursuant to part 15 of the FCC Rules. These limits are designed to provide reasonable protection against harmful interference when the equipment is operated in a commercial environment. This equipment generates, uses, and can radiate radio frequency energy and, if not installed and used in accordance with the instruction manual, may cause harmful interference to radio communications. Operation of this equipment in a residential area is likely to cause harmful interference in which case the user will be required to correct the interference at his own expense.

© Banner Engineering Corp.

Industry Canada Class A

This device complies with CAN ICES-3 (A)/NMB-3(A). Operation is subject to the following two conditions: 1) This device may not cause harmful interference; and 2) This device must accept any interference received, including interference that may cause undesired operation.

Cet appareil est conforme à la norme NMB-3(A). Le fonctionnement est soumis aux deux conditions suivantes : (1) ce dispositif ne peut pas occasionner d'interférences, et (2) il doit tolérer toute interférence, y compris celles susceptibles de provoquer un fonctionnement non souhaité du dispositif.

Banner Engineering Corp Limited Warranty

Banner Engineering Corp. warrants its products to be free from defects in material and workmanship for one year following the date of shipment. Banner Engineering Corp. will repair or replace, free of charge, any product of its manufacture which, at the time it is returned to the factory, is found to have been defective during the warranty period. This warranty does not cover damage or liability for misuse, abuse, or the improper application or installation of the Banner product.

THIS LIMITED WARRANTY IS EXCLUSIVE AND IN LIEU OF ALL OTHER WARRANTIES WHETHER EXPRESS OR IMPLIED (INCLUDING, WITHOUT LIMITATION, ANY WARRANTY OF MERCHANTABILITY OR FITNESS FOR A PARTICULAR PURPOSE), AND WHETHER ARISING UNDER COURSE OF PERFORMANCE, COURSE OF DEALING OR TRADE USAGE.

This Warranty is exclusive and limited to repair or, at the discretion of Banner Engineering Corp., replacement. **IN NO EVENT SHALL BANNER ENGINEERING CORP. BE LIABLE TO BUYER OR ANY OTHER PERSON OR ENTITY FOR ANY EXTRA COSTS, EXPENSES, LOSSES, LOSS OF PROFITS, OR ANY INCIDENTAL, CONSEQUENTIAL OR SPECIAL DAMAGES RESULTING FROM ANY PRODUCT DEFECT OR FROM THE USE OR INABILITY TO USE THE PRODUCT, WHETHER ARISING IN CONTRACT OR WARRANTY, STATUTE, TORT, STRICT LIABILITY, NEGLIGENCE, OR OTHERWISE.**

Banner Engineering Corp. reserves the right to change, modify or improve the design of the product without assuming any obligations or liabilities relating to any product previously manufactured by Banner Engineering Corp. Any misuse, abuse, or improper application or installation of this product or use of the product for personal protection applications when the product is identified as not intended for such purposes will void the product warranty. Any modifications to this product without prior express approval by Banner Engineering Corp will void the product warranties. All specifications published in this document are subject to change; Banner reserves the right to modify product specifications or update documentation at any time. Specifications and product information in English supersede that which is provided in any other language. For the most recent version of any documentation, refer to: www.bannerengineering.com.

For patent information, see www.bannerengineering.com/patents.

Document title: Q5X Laser Triangulation Sensor with Analog Outputs and IO-Link Instruction Manual
Part number: 219602
Revision: C
Original Instructions
© Banner Engineering Corp. All rights reserved.

219602

LinkedIn

Twitter

Facebook



© 2023. All rights reserved.
www.bannerengineering.com