TI01373T/09/EN/05.23-00
71611068
2023-03-20

Technical Information
iTHERM ModuLine TM131

Trend-setting, highly modular and robust RTD or TC thermometer for a wide range of industrial applications



Complete with welded thermowell or for use with an existing thermowell on-site

Application

- For universal use
- Measuring range: −200 to +1 100 °C (−328 to +2 012 °F)
- Pressure range up to 100 bar (1 450 psi)
- Vibration-resistant sensor elements up to 60g
- Improved ease of maintenance (sensor replacement without process shutdown), easy and safe recalibration of the measuring point

Head transmitter

All Endress+Hauser transmitters are available with enhanced accuracy and reliability compared to directly wired sensors. Easy customizing by choosing the outputs and communication protocols:

- Analog output 4 to 20 mA, HART®
  HART® SIL transmitter, optional
- PROFIBUS® PA, FOUNDATION Fieldbus™, PROFINET® with Ethernet APL

Your benefits

- Second process seal with failure indication offering valuable device health status information
- iTHERM QuickSens: fastest response times of 1.5 s for optimum process control
- iTHERM StrongSens: unsurpassed vibration resistance (> 60g) for ultimate plant safety
- iTHERM QuickNeck – cost and time savings thanks to simple, tool-free recalibration
- Bluetooth® connectivity (optional)
- International certifications: explosion protection according to ATEX, IECEx, CSA and NEPSI

Endress+Hauser
People for Process Automation

Table of contents

Function and system design 3
iTHERM ModuLine - thermometer for general applications 3
Measuring principle 3
Measuring system 4
Modular design 6

Input 8
Measured variable 8
Measuring range 8

Output 8
Output signal 8
Family of temperature transmitters 8

Power supply 9
Terminal assignment 9
Cable entries 13
Overvoltage protection 17

Performance characteristics 18
Reference conditions 18
Maximum measured error 18
Influence of ambient temperature 19
Self heating 19
Response time 20
Calibration 20
Insulation resistance 22

Installation 22
Orientation 22
Installation instructions 22

Environment 22
Ambient temperature range 22
Storage temperature 23
Humidity 23
Climate class 23
Degree of protection 23
Shock and vibration resistance 23
Electromagnetic compatibility (EMC) 23

Process 23
Process temperature range 23
Process pressure range 23

Mechanical construction 26
Design, dimensions 26
Weight 37
Material 37
Process connections 38
Inserts 49
Surface roughness 49
Terminal heads 49
Extension neck 57

Certificates and approvals 62
Test on thermowell 62
MID 62

Ordering information 62

Accessories 62
Service-specific accessories 62

Supplementary documentation 63

Function and system design

iTHERM ModuLine - thermometer for general applications

This thermometer is part of the product line of modular thermometers for industrial applications.

Differentiating factors when selecting a suitable thermometer

Direct contact ↓

Version with thermowell ↓

Advanced technology

"Advanced" thermometers offer cutting-edge technology with features such as a replaceable insert, quick-fastening extension neck (iTHERM QuickNeck), vibration-resistant and fast-response sensor technology (iTHERM StrongSens and QuickSens) and safety features like approvals for use in hazardous areas, second process seal "Dual Seal" or SIL thermometers

TM111 advanced

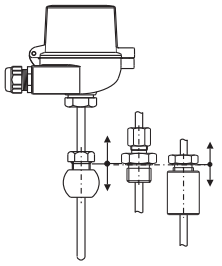

A0038281

TM131 advanced

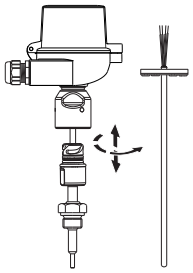

A0038195

Basic technology

"Basic" thermometers are characterized by basic sensor technology and are a low-cost alternative to thermometers with cutting-edge technology. The insert is not always replaceable. Application only in the non-hazardous area.

TM101 basic

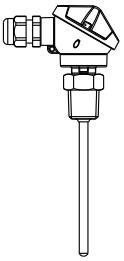

A0039102

TM121 basic

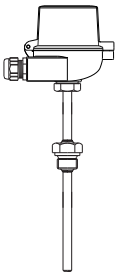

A0038194

Measuring principle

Resistance thermometer (RTD)

These resistance thermometers use a Pt100 temperature sensor according to IEC 60751. The temperature sensor is a temperature-sensitive platinum resistor with a resistance of 100 Ω at 0 °C (32 °F) and a temperature coefficient α = 0.003851 °C^{-1}.

There are generally two different kinds of platinum resistance thermometers:

- **Wire wound (WW):** Here, a double coil of fine, high-purity platinum wire is located in a ceramic support. This is then sealed top and bottom with a ceramic protective layer. Such resistance thermometers not only facilitate very reproducible measurements but also offer good long-term stability of the resistance/temperature characteristic within temperature ranges up to 600 °C (1 112 °F). This type of sensor is relatively large in size and it is comparatively sensitive to vibrations.
- **Thin film platinum resistance thermometers (TF):** A very thin, ultrapure platinum layer, approx. 1 µm thick, is vaporized in a vacuum on a ceramic substrate and then structured photolithographically. The platinum conductor paths formed in this way create the measuring resistance. Additional covering and passivation layers are applied and reliably protect the thin platinum layer from contamination and oxidation, even at high temperatures.

The primary advantages of thin film temperature sensors over wire wound versions are their smaller sizes and better vibration resistance. A relatively low principle-based deviation of the resistance/temperature characteristic from the standard characteristic of IEC 60751 can frequently be observed among TF sensors at high temperatures. As a result, the tight limit values of tolerance category A as per IEC 60751 can only be observed with TF sensors at temperatures up to approx. 300 °C (572 °F).

Thermocouples (TC)

Thermocouples are comparatively simple, robust temperature sensors which use the Seebeck effect for temperature measurement: if two electrical conductors made of different materials are connected at a point, a weak electrical voltage can be measured between the two open conductor ends if the conductors are subjected to a thermal gradient. This voltage is called thermoelectric voltage or electromotive force (emf.). Its magnitude depends on the type of conducting materials and the temperature difference between the "measuring point" (the junction of the two conductors) and the "cold junction" (the open conductor ends). Accordingly, thermocouples primarily only measure differences in temperature. The absolute temperature at the measuring point can be determined from these if the associated temperature at the cold junction is known or is measured separately and compensated for. The material combinations and associated thermoelectric voltage/temperature characteristics of the most common types of thermocouple are standardized in the IEC 60584 and ASTM E230/ANSI MC96.1 standards.

Measuring system

Endress+Hauser offers a complete portfolio of optimized components for the temperature measuring point – everything you need for the seamless integration of the measuring point into the overall facility. This includes:

- Power supply unit/barrier
- Display units
- Overvoltage protection

For more information, see the brochure "System Components - Solutions for a Complete Measuring Point" (FA00016K)

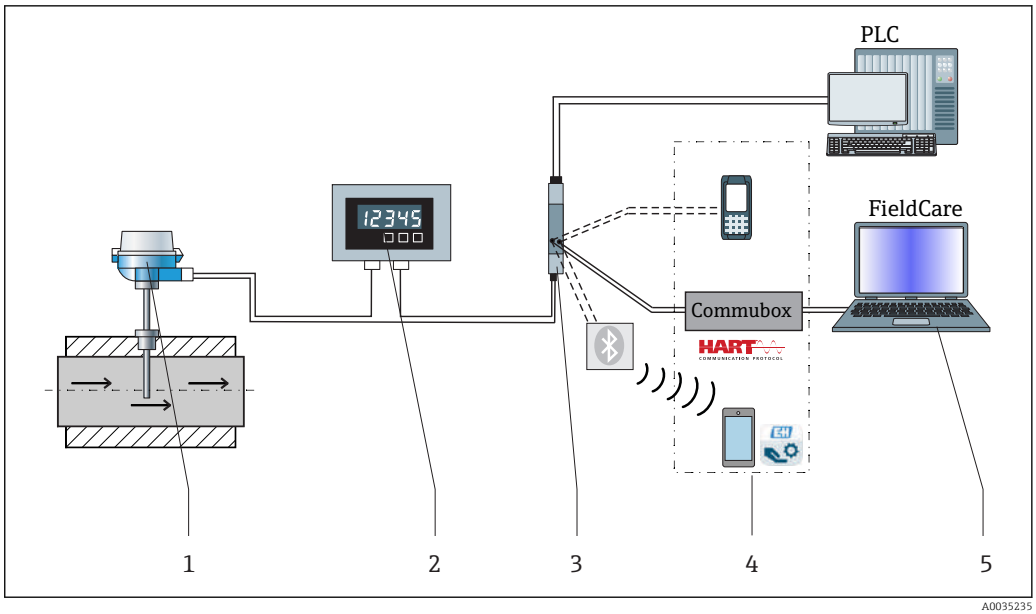

1 Example of application, measuring point layout with additional Endress+Hauser components

1 *Installed iTHERM thermometer with HART® communication protocol*
2 *RIA15 loop powered process display - It is integrated in the current loop and displays the measuring signal or HART® process variables in digital form. The process display unit does not require an external power supply. It is powered directly from the current loop. More information on this can be found in the Technical Information, see "Documentation".*
3 *Active barrier RN42 - The RN42 (17.5 V_{DC}, 20 mA) active barrier has a galvanically isolated output for supplying voltage to loop-powered transmitters. The universal power supply works with an input supply voltage of 24 to 230 V AC/DC, 0/50/60 Hz, which means that it can be used in all international power grids. More information on this can be found in the Technical Information, see "Documentation".*
4 *Communication examples: HART® Communicator (handheld terminal), FieldXpert, Commubox FXA195 for intrinsically safe HART® communication with FieldCare via the USB interface, Bluetooth® technology with SmartBlue App.*
5 *FieldCare is a FDT-based plant asset management tool from Endress+Hauser, for details see section "accessories".*

Modular design

Construction		Options

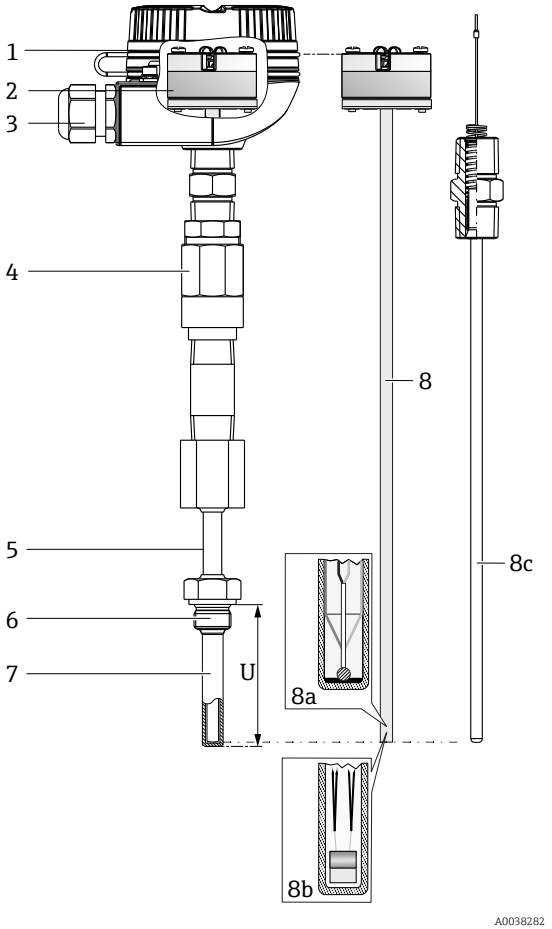	1: Terminal head	Variety of terminal heads made of aluminum, polyamide or stainless steel
		Your benefits:
		▪ Optimum terminal access thanks to low housing edge of bottom section:
		  ▪ Easier to use
		  ▪ Lower installation and maintenance costs
		▪ Optional display: local process display for added reliability

	2: Wiring, electrical connection, output signal	▪ Ceramic terminal block ▪ Flying leads ▪ Head transmitter (4 to 20 mA, HART®, PROFINET® with Ethernet-APL, PROFIBUS® PA, FOUNDATION™ Fieldbus), single-channel or dual-channel ▪ Attachable display
	3: Plug or cable gland	▪ PROFIBUS® plug PA/FOUNDATION™ Fieldbus/PROFINET®, 4-pin ▪ 8-pin plug ▪ Polyamide or brass cable glands
	4: Removable extension neck	Different extension neck options are available. ▪ Without extension neck according to DIN43772 Form 2 ▪ Lagging according to Form 2 F/G, 3G/G removable extension neck according to DIN43772 ▪ QuickNeck ▪ Nipple, Nipple-Union, or Nipple-Union-Nipple **Your benefits:** **iTHERM QuickNeck:** tool-free removal of the insert: Saves time/costs on frequently calibrated measuring points and prevents wiring faults
	5: Lagging	The lagging of the thermowell provides space between the thermometer connection and the process connection.
	6: Process connection	Variety of process connections including threads, flanges according to EN or ASME standard, compression fittings
	7: Thermowell	Versions with and without thermowell (insert in direct contact with process) Various diameters, materials and tip types (straight, reduced or tapered) **Your benefits:** Quick-response thermowell which reduces the response time t_{90} of temperature measurement by a factor of 4, compared to traditional thermowell design

	8: Insert with:
	8a: iTHERM QuickSens
	8b: iTHERM StrongSens
	8c: Central-spring-loaded insert
		Sensor models: RTD - wire wound (WW), thin-film sensor (TF) or thermocouples type K, J or N. Insert diameter Ø3 mm (⅛ in) or Ø6 mm (¼ in), depending on thermowell tip or selected thermometer
		Your benefits:
		▪ **iTHERM QuickSens** - insert with the world's fastest response time:
		  ▪ Fast, highly accurate measurements, delivering maximum process safety and control
		  ▪ Quality and cost optimization
		▪ **iTHERM StrongSens** - insert with unbeatable durability:
		  ▪ Vibration resistance > 60g: lower life cycle costs thanks to longer operating life and high plant availability
		  ▪ Automated, traceable production: top quality and maximum process safety

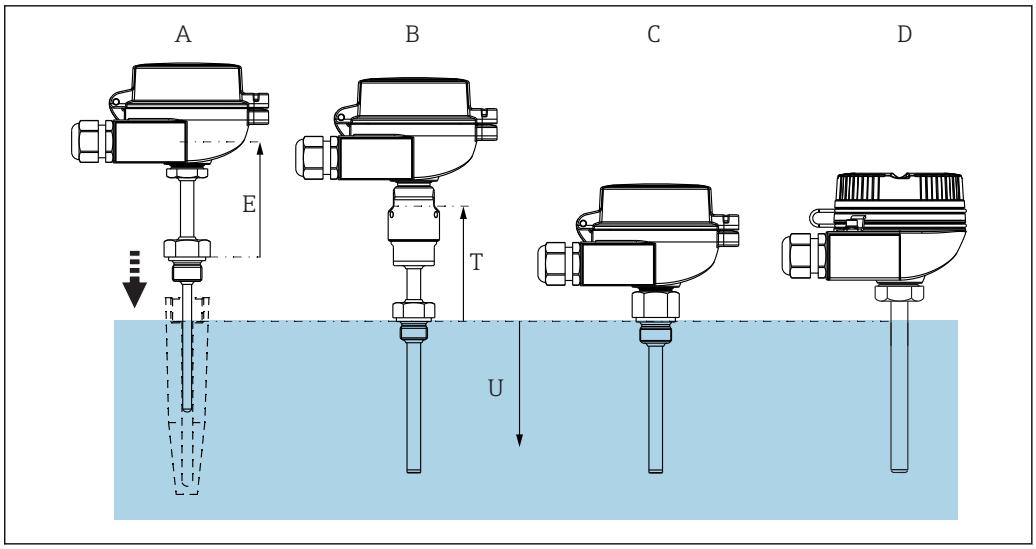

2 *Different thermowell versions available*

A Thermometer for installation in a separate thermowell
B Thermometer with thermowell, continuous, similar to DIN43772 Form 2 G/F, 3 G/F
C Thermometer with thermowell, hexagonal, similar to DIN43772 Form 5, 8
D Thermometer with thermowell, without lagging similar to DIN43772 Form 2

E Length of removable extension neck - can be replaced (DIN extension neck, second process seal, nipple, etc.)
T Length of thermowell lagging - lagging or extension neck, integral part of the thermowell
U Immersion length - length of the lower thermometer section in the process medium, usually from the process connection

Input

Measured variable

Temperature (temperature-linear transmission behavior)

Measuring range

Depends on the type of sensor used

Sensor type	Measuring range
Pt100 thin-film	−50 to +400 °C (−58 to +752 °F)
Pt100 thin-film, iTHERM StrongSens, vibration-resistant > 60g	−50 to +500 °C (−58 to +932 °F)
Pt100 thin-film, iTHERM QuickSens, fast-response	−50 to +200 °C (−58 to +392 °F)
Pt100 wire wound, extended measuring range	−200 to +600 °C (−328 to +1 112 °F)
Thermocouple TC, type J	−40 to +750 °C (−40 to +1 382 °F)
Thermocouple TC, type K	−40 to +1 100 °C (−40 to +2 012 °F)
Thermocouple TC, type N	

Output

Output signal

Generally, the measured value can be transmitted in one of two ways:

- Directly-wired sensors - sensor measured values forwarded without a transmitter.
- By selecting the corresponding Endress+Hauser iTEMP temperature transmitter via all common protocols. All the transmitters listed below are mounted directly in the terminal head and wired with the sensory mechanism.

Family of temperature transmitters

Thermometers fitted with iTEMP transmitters are an installation-ready complete solution to improve temperature measurement by significantly increasing accuracy and reliability, when compared to direct wired sensors, as well as reducing both wiring and maintenance costs.

4 to 20 mA head transmitters
They offer a high degree of flexibility, thereby supporting universal application with low inventory storage. The iTEMP transmitters can be configured quickly and easily at a PC. Endress+Hauser offers free configuration software which can be downloaded from the Endress+Hauser Website.

HART® head transmitters
The transmitter is a 2-wire device with one or two measuring inputs and one analog output. The device not only transfers converted signals from resistance thermometers and thermocouples, it also transfers resistance and voltage signals using HART® communication. Swift and easy operation, visualization and maintenance using universal configuration software like FieldCare, DeviceCare or FieldCommunicator 375/475. Integrated Bluetooth® interface for the wireless display of measured values and configuration via E+H SmartBlue (app), optional.

PROFIBUS® PA head transmitters
Universally programmable head transmitter with PROFIBUS® PA communication. Conversion of various input signals into digital output signals. High accuracy over the complete ambient temperature range. PROFIBUS PA functions and device-specific parameters are configured via fieldbus communication.

FOUNDATION Fieldbus™ head transmitters
Universally programmable head transmitter with FOUNDATION Fieldbus™ communication. Conversion of various input signals into digital output signals. High accuracy over the complete ambient temperature range. All transmitters are approved for use in all the main distributed control systems. The integration tests are performed in Endress+Hauser's 'System World'.

Head transmitter with PROFINET® and Ethernet-APL
The temperature transmitter is a 2-wire device with two measuring inputs. The device not only transfers converted signals from resistance thermometers and thermocouples, it also transfers resistance and voltage signals using the PROFINET® protocol. Power is supplied via the 2-wire

Ethernet connection according to IEEE 802.3cg 10Base-T1. The transmitter can be installed as an intrinsically safe electrical apparatus in Zone 1 hazardous areas. The device can be used for instrumentation purposes in the terminal head form B (flat face) according to DIN EN 50446.

Advantages of the iTEMP transmitters:
- Dual or single sensor input (optionally for certain transmitters)
- Attachable display (optionally for certain transmitters)
- Unsurpassed reliability, accuracy and long-term stability in critical processes
- Mathematical functions
- Monitoring of the thermometer drift, sensor backup functionality, sensor diagnostic functions
- Sensor-transmitter-matching for dual-channel transmitters, based on the Callendar van Dusen coefficients (CvD).

Field transmitter
Field transmitter with HART®, FOUNDATION Fieldbus™ or PROFIBUS® PA communication and backlighting. Can be read easily from a distance, in sunlight and at night. Large measurement value format, bar graphs and faults are displayed. The benefits are: dual sensor input, highest reliability in harsh industrial environments, mathematical functions, thermometer drift monitoring and sensor back-up functionality, corrosion detection.

Power supply

The sensor connection wires are equipped with terminal lugs. The nominal diameter of a lug is 1.3 mm (0.05 in)

Terminal assignment

Type of sensor connection RTD

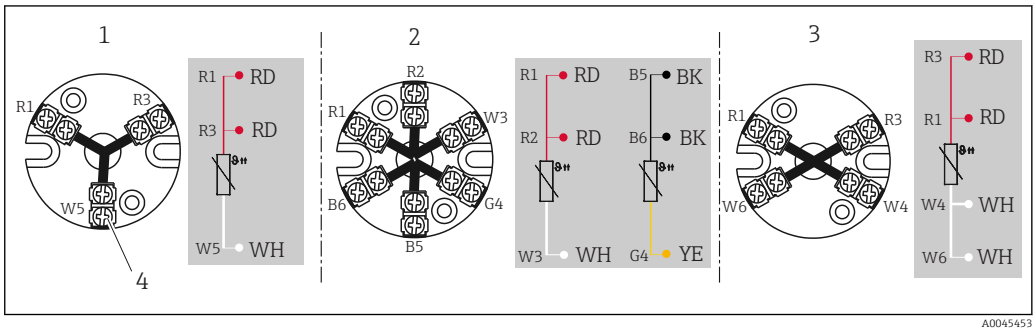

3 *Terminal block mounted*

1 *3-wire, single*
2 *2 x 3-wire, single*
3 *4-wire, single*
4 *Outside screw*

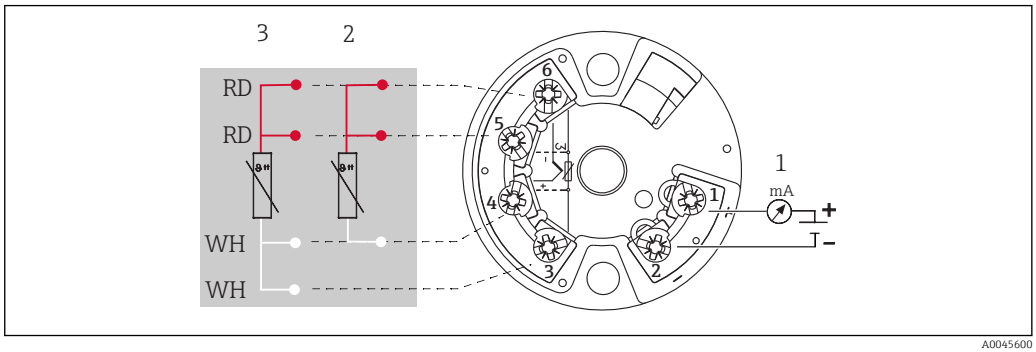

4 *Head mounted transmitter TMT18x (single input)*

1 *Power supply head transmitter and analog output 4 to 20 mA or fieldbus connection*
2 *RTD, 3-wire*
3 *RTD, 4-wire*

Only available with screw terminals

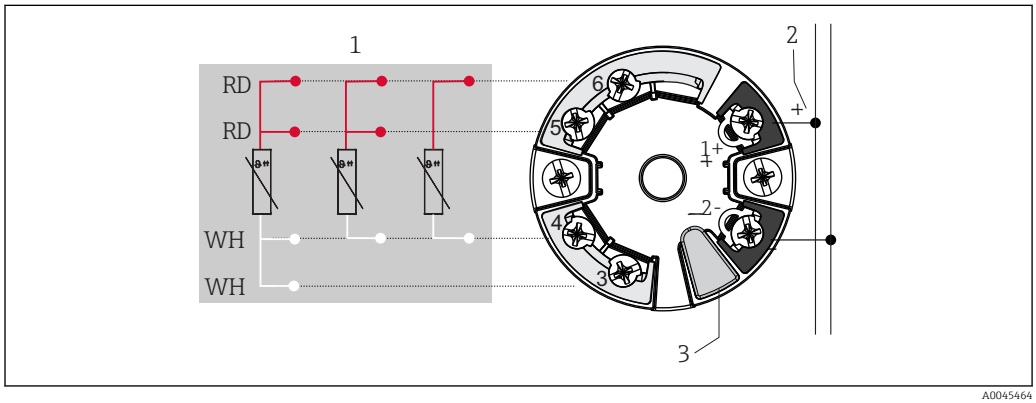

5 *Head mounted transmitter TMT7x or TMT31 (single input)*

1 *Sensor input, RTD and Ω: 4-, 3- and 2-wire*
2 *Power supply or fieldbus connection*
3 *Display connection/CDI interface*

Fitted with spring terminals if screw terminals are not explicitly selected, the second process seal is chosen or a double sensor is installed.

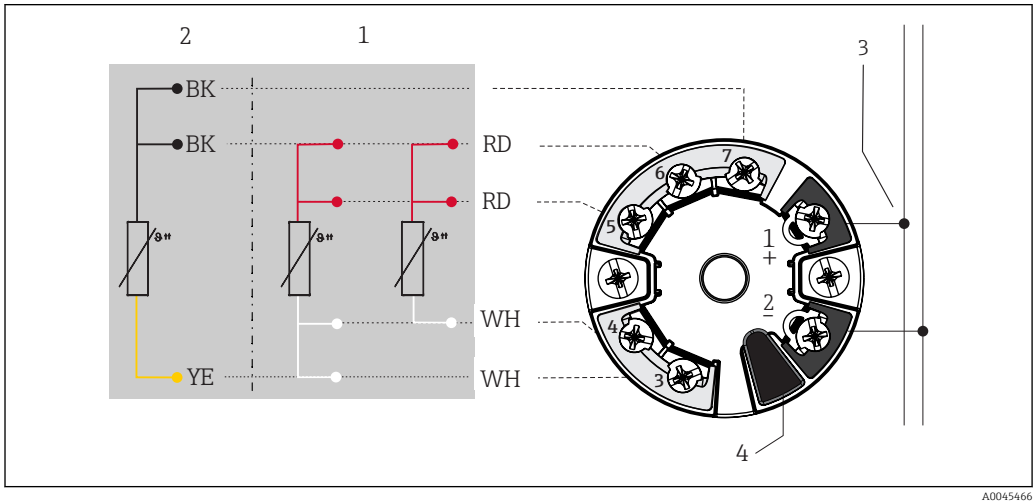

6 *Head mounted transmitter TMT8x (dual input)*

1 *Sensor input 1, RTD: 4- and 3-wire*
2 *Sensor input 2, RTD: 3-wire*
3 *Power supply or fieldbus connection*
4 *Display connection*

Fitted with spring terminals if screw terminals are not explicitly selected, the second process seal is chosen or a double sensor is installed.

Mounted field transmitter: Fitted with screw terminals

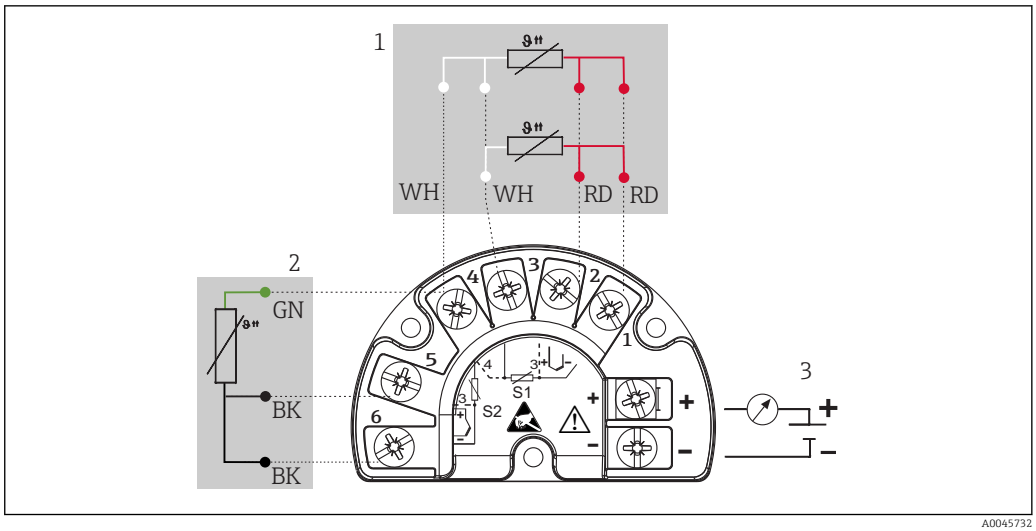

7 *TMT162 (dual input)*

1 *Sensor input 1, RTD: 3- and 4-wire*
2 *Sensor input 2, RTD: 3-wire*
3 *Power supply field transmitter and analog output 4 to 20 mA or fieldbus connection*

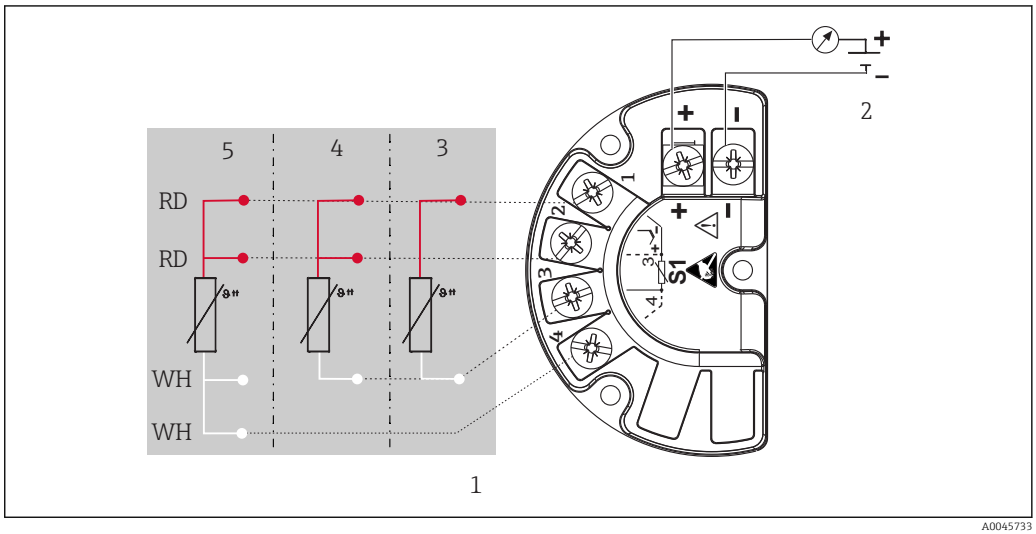

8 *TMT142B (single input)*

1 *Sensor input RTD*
2 *Power supply field transmitter and analog output 4 to 20 mA, HART® signal*
3 *2-wire*
4 *3-wire*
5 *4-wire*

Type of sensor connection thermocouple (TC)

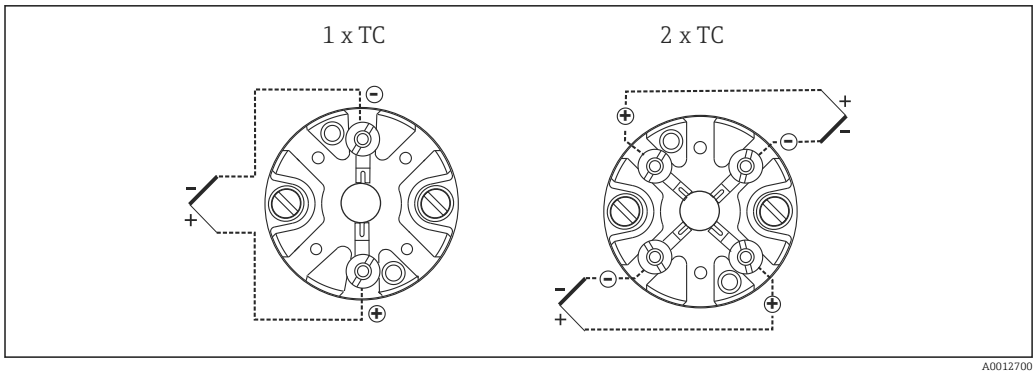

9 Terminal block mounted

Head mounted transmitter TMT18x (single sensor input) [1]	Head mounted transmitter TMT8x (dual sensor input) [2]
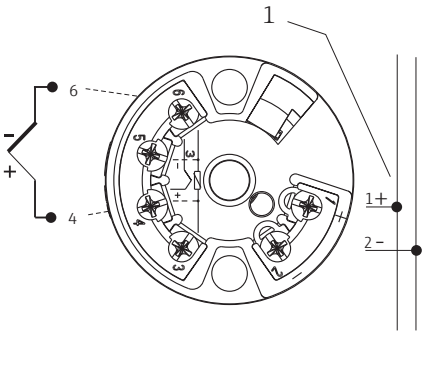 *1 Power supply, head transmitter and analog output 4 to 20 mA or fieldbus communication*	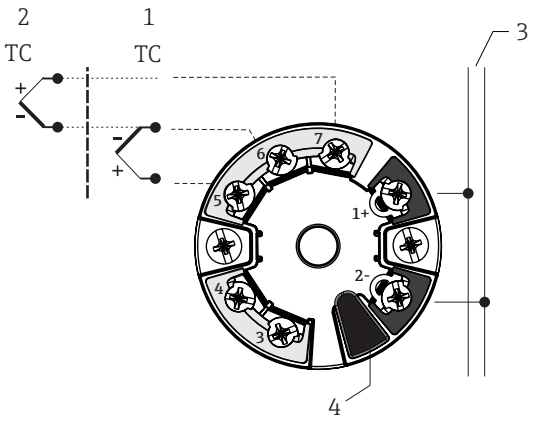 *1 Sensor input 1* *2 Sensor input 2* *3 Fieldbus communication and power supply* *4 Display connection*
Head mounted transmitter TMT7x (single sensor input) [2]	**Mounted field transmitter TMT162 or TMT142B [1]**
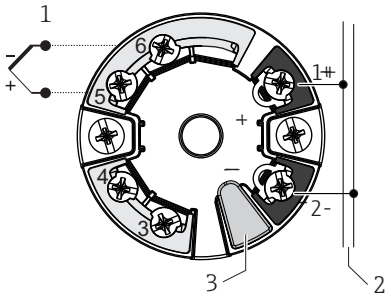 *1 Sensor input TC, mV* *2 Power supply, bus connection* *3 Display connection/CDI interface*	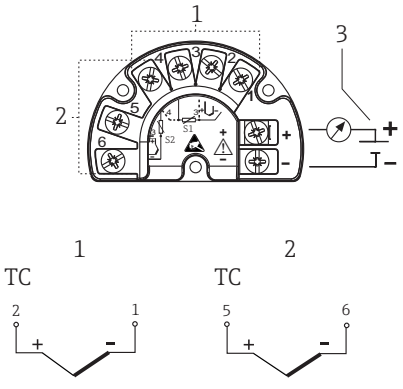 *1 Sensor input 1* *2 Sensor input 2 (not TMT142B)* *3 Supply voltage for field transmitter and analog output 4 to 20 mA or fieldbus communication*

1) Fitted with screw terminals
2) Fitted with spring terminals if screw terminals are not explicitly selected or a double sensor is installed.

Thermocouple wire colors

As per IEC 60584	As per ASTM E230
▪ Type J: black (+), white (-) ▪ Type K: green (+), white (-) ▪ Type N: pink (+), white (-)	▪ Type J: white (+), red (-) ▪ Type K: yellow (+), red (-) ▪ Type N: orange (+), red (-)

Integrated overvoltage protection

Overvoltage protection is optionally available [1]. The module protects the electronics from damage from overvoltage. Overvoltage occurring in signal cables (e.g. 4 to 20 mA, communication lines (fieldbus systems) and power supply is diverted to ground. The functionality of the transmitter is not affected as no problematic voltage drop occurs.

Connection data:

Maximum continuous voltage (rated voltage)	U_C = 36 V_{DC}
Nominal current	I = 0.5 A at $T_{amb.}$ = 80 °C (176 °F)
Surge current resistance ▪ Lightning surge current D1 (10/350 µs) ▪ Nominal discharge current C1/C2 (8/20 µs)	 ▪ I_{imp} = 1 kA (per wire) ▪ I_n = 5 kA (per wire) I_n = 10 kA (total)
Temperature range	−40 to +80 °C (−40 to +176 °F)
Series resistance per wire	1.8 Ω, tolerance ±5 %

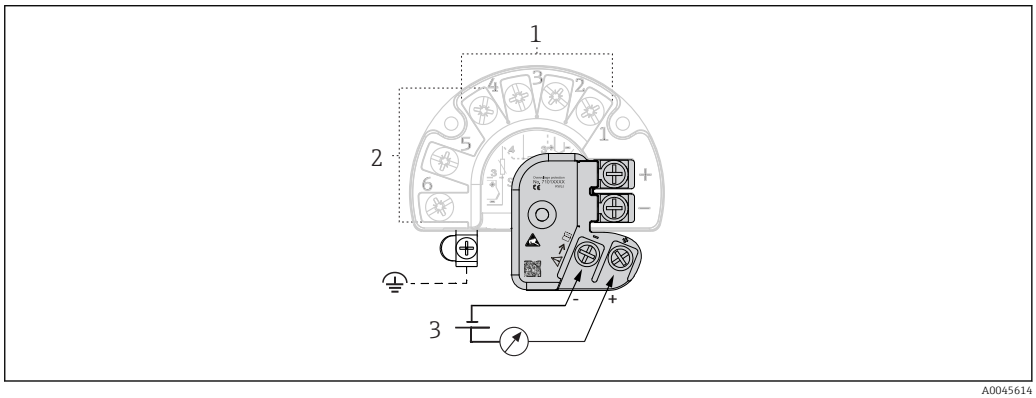

10 Electrical connection of surge arrester

1 Sensor connection 1
2 Sensor connection 2
3 Bus terminator and power supply

The device must be connected to the potential equalization via the external ground clamp. The connection between the housing and the local ground must have a minimum cross-section of 4 mm^2 (13 AWG). All ground connections must be secured tightly.

Cable entries

See "Terminal heads" section

The cable entries must be selected during the configuration of the device. Different terminal heads offer different possibilities with regard to threads and the number of available cable entries.

1) Available for the field transmitters with HART® 7 communication

Connectors

Endress+Hauser offers a wide variety of connectors for the simple and fast integration of the thermometer into a process control system. The following tables show the PIN assignments of the various plug connector combinations.

We do not recommend connecting thermocouples directly to connectors. The direct connection to the pins of the plug might generate a new 'thermocouple' which influences the accuracy of the measurement. Therefore we do not connect thermocouples directly to connectors. The thermocouples are connected in combination with a transmitter.

Abbreviations

#1	Order: first transmitter/insert	#2	Order: second transmitter/insert
i	Insulated. Wires marked 'i' are not connected and are insulated with heat shrink tubes.	YE	Yellow
GND	Grounded. Wires marked 'GND' are connected to the internal grounding screw in the terminal head.	RD	Red
BN	Brown	WH	White
GNYE	Green-yellow	PK	Pink
BU	Blue	GN	Green
GY	Gray	BK	Black

Terminal head with one cable entry

Plug	**1x PROFIBUS PA**								**1x FOUNDATION™ Fieldbus (FF)**				**1x PROFINET and Ethernet-APL**			
Plug thread	M12				7/8"				7/8"				M12			
PIN number	1	2	3	4	1	2	3	4	1	2	3	4	1	2	3	4
Electrical connection (terminal head)																
Flying leads and TC	Not connected (not insulated)															
3-wire terminal block (1x Pt100)	RD	RD	WH		RD	RD	WH		RD	RD	WH		RD	RD	WH	
4-wire terminal block (1x Pt100)			WH	WH			WH	WH			WH	WH			WH	WH
6-wire terminal block (2x Pt100)	RD (#1) [1]	RD (#1)	WH (#1)		RD (#1)	RD (#1)	WH (#1)		RD (#1)	RD (#1)	WH (#1)				WH (#1)	
1x TMT 4 to 20 mA or HART®	+	i	-	i	+	i	-	i	+	i	-	i	+	i	-	i
2x TMT 4 to 20 mA or HART® in the terminal head with a high cover	+(#1)	+(#2)	-(#1)	-(#2)	+(#1)	+(#2)	-(#1)	-(#2)	+(#1)	+(#2)	-(#1)	-(#2)	+(#1)	+(#2)	-(#1)	-(#2)
1x TMT PROFIBUS® PA	+	i	-	GND [2]	+	i	-	GND [2]	Cannot be combined							
2x TMT PROFIBUS® PA	+(#1)		-(#1)		+		-									
1x TMT FF	Cannot be combined				Cannot be combined				-	+	GND	i	Cannot be combined			
2x TMT FF									-(#1)	+(#1)						
1x TMT PROFINET®									Cannot be combined				APL signal -	APL signal +	GND	i

Plug	1x PROFIBUS PA		1x FOUNDATION™ Fieldbus (FF)	1x PROFINET and Ethernet-APL			
2x TMT PROFINET®				APL signal - (#1)	APL signal + (#1)		
PIN position and color code	 1 BN 2 GNYE 3 BU 4 GY A0018929		 1 BN 2 GNYE 3 BU 4 GY A0018930	 1 BU 2 BN 3 GY 4 GNYE A0018931		 1 RD 2 GN A0052119	

1) Second Pt100 is not connected
2) If using a head without a grounding screw, e.g. plastic housing TA30S or TA30P, insulated 'i' instead of grounded GND

Terminal head with one cable entry (continued)

Plug	4-pin / 8-pin							
Plug thread	M12							
PIN number	1	2	3	4	5	6	7	8
Electrical connection (terminal head)								
Flying leads and TC	Not connected (not insulated)							
3-wire terminal block (1x Pt100)	RD	RD	WH		i			
4-wire terminal block (1x Pt100)			WH	WH				
6-wire terminal block (2x Pt100)			WH		BK	BK	YE	
1x TMT 4 to 20 mA or HART®	+(#1)	i	-(#1)	i	i			
2x TMT 4 to 20 mA or HART® in the terminal head with a high cover					+(#2)	i	-(#2)	i
1x TMT PROFIBUS® PA	Cannot be combined							
2x TMT PROFIBUS® PA								
1x TMT FF	Cannot be combined							
2x TMT FF								
1x TMT PROFINET®	Cannot be combined							
2x TMT PROFINET®	Cannot be combined							
PIN position and color code	 1 BN 2 GNYE 3 BU 4 GY A0018929 11 *4-pin plug*				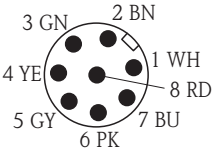 A0018927 12 *8-pin plug*			

Terminal head with two cable entries

Plug	2x PROFIBUS® PA								2x FOUNDATION™ Fieldbus (FF)				2x PROFINET and Ethernet-APL			
Plug thread  A0021706	M12(#1) / M12(#2)				7/8"(#1)/7/8"(#2)				7/8"(#1)/7/8"(#2)				M12 (#1)/M12 (#2)			
PIN number	1	2	3	4	1	2	3	4	1	2	3	4	1	2	3	4

Plug	2x PROFIBUS® PA								2x FOUNDATION™ Fieldbus (FF)				2x PROFINET and Ethernet-APL			
Electrical connection (terminal head)																
Flying leads and TC	Not connected (not insulated)															
3-wire terminal block (1x Pt100)	RD/i	RD/i	WH/i		RD/i	RD/i	WH/i		RD/i	RD/i	WH/i		RD/i	RD/i	WH/i	
4-wire terminal block (1x Pt100)			WH/i	WH/i			WH/i	WH/i			WH/i	WH/i			WH/i	WH/i
6-wire terminal block (2x Pt100)	RD/BK	RD/BK	WH/YE		RD/BK	RD/BK	WH/YE		RD/BK	RD/BK	WH/YE		RD/BK	RD/BK	WH/YE	
1x TMT 4 to 20 mA or HART®	+/i	i/i	-/i	i/i	+/i	i/i	-/i	i/i	+/i	i/i	-/i	i/i	+/i	i/i	-/i	i/i
2x TMT 4 to 20 mA or HART® in the terminal head with a high cover	+ (#1)/ + (#2)		- (#1)/ -(#2)		+ (#1)/ + (#2)		- (#1)/ -(#2)		+ (#1)/ + (#2)		- (#1)/ -(#2)		+ (#1)/ +(#2)		- (#1)/ -(#2)	
1x TMT PROFIBUS® PA	+/i		-/i	GND/ GND	+/i		-/i	GND/ GND	Cannot be combined							
2x TMT PROFIBUS® PA	+ (#1)/ + (#2)		- (#1)/ -(#2)		+ (#1)/ + (#2)		- (#1)/ -(#2)									
1x TMT FF	Cannot be combined				Cannot be combined				-/i	+/i	i/i	GND/ GND	Cannot be combined			
2x TMT FF									- (#1)/ -(#2)	+ (#1)/ + (#2)						
1x TMT PROFINET®	Cannot be combined				Cannot be combined				Cannot be combined				APL signal -	APL signal +	GND	i
2x TMT PROFINET®	Cannot be combined				Cannot be combined				Cannot be combined				APL signal - (#1) and (#2)	APL signal + (#1) and (#2)		
PIN position and color code	 1 BN 2 GNYE 3 BU 4 GY A0018929				 1 BN 2 GNYE 3 BU 4 GY A0018930				 1 BU 2 BN 3 GY 4 GNYE A0018931				 1 RD 2 GN A0052119			

Terminal head with two cable entries (continued)

Plug	4-pin / 8-pin							
Plug thread 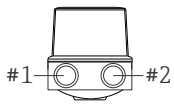 #1 #2 A0021706	M12 (#1)/M12 (#2)							
PIN number	1	2	3	4	5	6	7	8

Electrical connection (terminal head)				
Flying leads and TC	Not connected (not insulated)			
3-wire terminal block (1x Pt100)	RD/i	RD/i	WH/i	i/i

<table>
<tr><th>Plug</th><th colspan="5">4-pin / 8-pin</th></tr>
<tr><td>4-wire terminal block (1x Pt100)</td><td></td><td></td><td>WH/i</td><td>WH/i</td><td rowspan="4"></td></tr>
<tr><td>6-wire terminal block (2x Pt100)</td><td>RD/BK</td><td>RD/BK</td><td colspan="2">WH/YE</td></tr>
<tr><td>1x TMT 4 to 20 mA or HART®</td><td>+/i</td><td rowspan="2">i/i</td><td>-/i</td><td rowspan="2">i/i</td></tr>
<tr><td>2x TMT 4 to 20 mA or HART® in the terminal head with a high cover</td><td>+(#1)/ +(#2)</td><td>-(#1)/-(#2)</td></tr>
<tr><td>1x TMT PROFIBUS® PA</td><td colspan="5" rowspan="2">Cannot be combined</td></tr>
<tr><td>2x TMT PROFIBUS® PA</td></tr>
<tr><td>1x TMT FF</td><td colspan="5" rowspan="2">Cannot be combined</td></tr>
<tr><td>2x TMT FF</td></tr>
<tr><td>1x TMT PROFINET®</td><td colspan="5">Cannot be combined</td></tr>
<tr><td>2x TMT PROFINET®</td><td colspan="5">Cannot be combined</td></tr>
<tr><td>PIN position and color code</td><td colspan="3">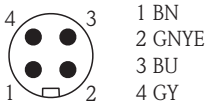

13 4-pin plug</td><td colspan="2">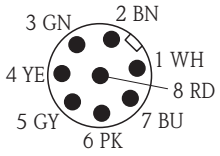

14 8-pin plug</td></tr>
</table>

Connection combination: insert - transmitter

Insert	Transmitter connection [1]			
	TMT180/TMT7x		TMT8x	
	1x 1-channel	2x 1-channel	1x 2-channel	2x 2-channel
1x sensor (Pt100 or TC), flying leads	Sensor (#1) : transmitter (#1)	Sensor (#1) : transmitter (#1) (Transmitter (#2) not connected)	Sensor (#1) : transmitter (#1)	Sensor (#1) : transmitter (#1) Transmitter (#2) not connected
2x sensor (2x Pt100 or 2x TC), flying leads	Sensor (#1) : transmitter (#1) Sensor (#2) insulated	Sensor (#1) : transmitter (#1) Sensor (#2): transmitter (#2)	Sensor (#1) : transmitter (#1) Sensor (#2): transmitter (#1)	Sensor (#1) : transmitter (#1) Sensor (#2): transmitter (#1) (Transmitter (#2) not connected)
1x sensor (Pt100 or TC),with terminal block [2]	Sensor (#1) : transmitter in cover	Cannot be combined	Sensor (#1) : transmitter in cover	Cannot be combined
2x sensor (2x Pt100 or 2x TC) with terminal block	Sensor (#1) : transmitter in cover Sensor (#2) not connected		Sensor (#1) : transmitter in cover Sensor (#2): transmitter in cover	

1) If 2 transmitters are selected in a terminal head, transmitter (#1) is installed directly on the insert. Transmitter (#2) is installed in the high cover. A TAG cannot be ordered for the 2nd transmitter as standard. The bus address is set to the default value and, if necessary, must be changed manually before commissioning.
2) Only in the terminal head with a high cover, only 1 transmitter possible. A ceramic terminal block is automatically fitted on the insert.

Overvoltage protection

To protect against overvoltage in the power supply and signal/communication cables for the thermometer electronics, Endress+Hauser offers the HAW562 surge arrester for DIN rail mounting and the HAW569 for field housing installation.

For more information see the Technical Information "HAW562 Surge arrester" TI01012K and "HAW569 Surge arrester" TI01013K.

An integrated surge arrester can be selected as an option for the field transmitters.

For more information see the Technical Information.

Performance characteristics

Reference conditions

These data are relevant for determining the accuracy of the temperature transmitters used. More information on this can be found in the Technical Information of the iTEMP temperature transmitters.

Maximum measured error

RTD assembly as per IEC 60751

Class	Max. tolerances (°C)	Characteristics
RTD maximum sensor error		
Cl. A	± (0.15 + 0.002 · |t| [1])	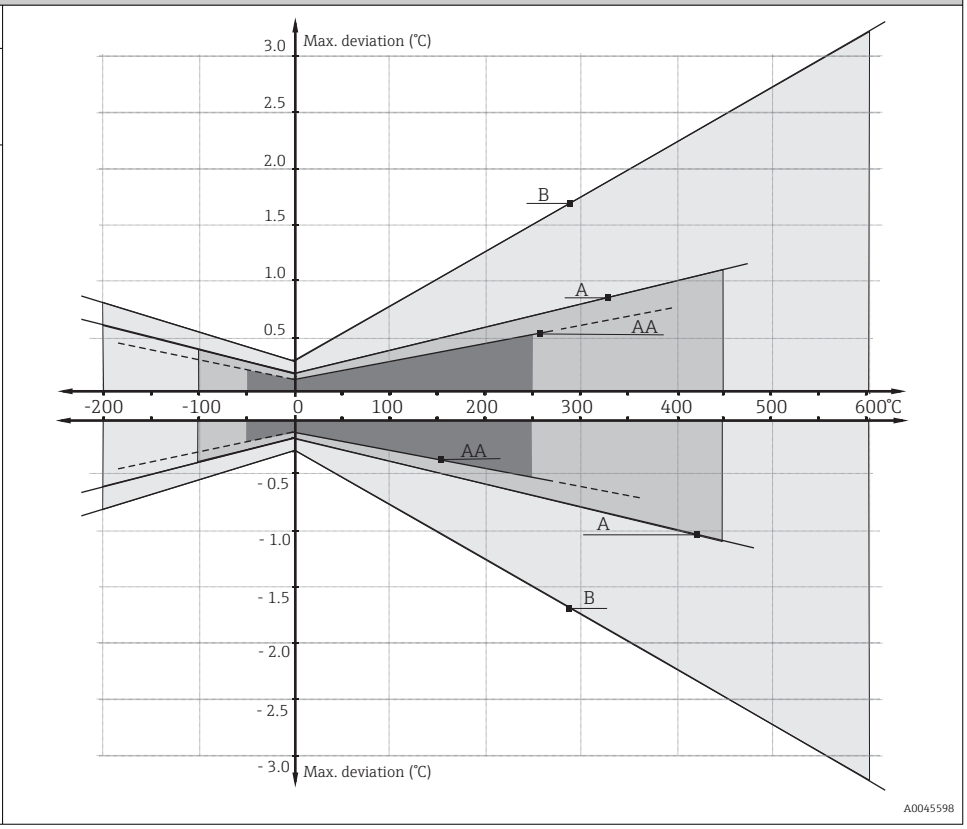
Cl. AA, formerly 1/3 Cl. B	± (0.1 + 0.0017 · |t|) [1]	
Cl. B	± (0.3 + 0.005 · |t| [1])	

1) |t| = absolute temperature value in °C

In order to obtain the maximum tolerances in °F, the results in °C must be multiplied by a factor of 1.8.

Temperature ranges

Sensor type	Operating temperature range	Class A	Class AA
Pt100 (TF) iTHERM StrongSens	−50 to +500 °C (−58 to +932 °F)	−30 to +300 °C (−22 to +572 °F)	0 to 200 °C (−58 to +392 °F)
iTHERM QuickSens	−50 to 200 °C (−58 to 392 °F)	−50 to 200 °C (−58 to 392 °F)	0 to 150 °C (32 to 302 °F)

Sensor type	Operating temperature range	Class A	Class AA
Thin-film sensor (TF)	−50 to 400 °C (−58 to 752 °F)	−50 to 250 °C (−58 to 482 °F)	0 to 100 °C (32 to 212 °F)
Wire wound sensor (WW)	−200 to 600 °C (−328 to 1 112 °F)	−200 to 600 °C (−328 to 1 112 °F)	−50 to 250 °C (−58 to 482 °F)

Permissible deviation limits of thermoelectric voltages from the standard characteristic for thermocouples as per IEC 60584 or ASTM E230/ANSI MC96.1:

Standard	Type	Standard tolerance		Special tolerance	
IEC 60584		Class	Deviation	Class	Deviation
	J (Fe-CuNi)	2	±2.5 °C (−40 to 333 °C) ±0.0075 |t| [1] (333 to 750 °C)	1	±1.5 °C (−40 to 375 °C) ±0.004 |t| [1] (375 to 750 °C)
	K (NiCr-NiAl) N (NiCrSi-NiSi)	2	±0.0075 |t| [1] (333 to 1 200 °C) ±2.5 °C (−40 to 333 °C) ±0.0075 |t| [1] (333 to 1 200 °C)	1	±1.5 °C (−40 to 375 °C) ±0.004 |t| [1] (375 to 1 000 °C)

1) |t| = absolute value in °C

In general, the base-metal thermocouples that are delivered comply with the production tolerances for temperatures > −40 °C (−40 °F) indicated in the table. These materials are mostly unsuitable for temperatures < −40 °C (−40 °F). The tolerances for Class 3 cannot be respected. A special choice of material is required for this temperature range. This cannot be processed through the standard product selection system.

Standard	Type	Standard tolerance	Special tolerance
ASTM E230/ANSI MC96.1		Deviation, the larger value applies in each case	
	J (Fe-CuNi)	±2.2 K or ±0.0075 |t| [1] (0 to 760 °C)	±1.1 K or ±0.004 |t| [1] (0 to 760 °C)
	K (NiCr-NiAl) N (NiCrSi-NiSi)	±2.2 K or ±0.02 |t| [1] (−200 to 0 °C) ±2.2 K or ±0.0075 |t| [1] (0 to 1 260 °C)	±1.1 K or ±0.004 |t| [1] (0 to 1 260 °C)

1) |t| = absolute value in °C

In general, the thermocouple materials that are delivered comply with the tolerances for temperatures > 0 °C (32 °F) indicated in the table. These materials are mostly unsuitable for temperatures < 0 °C (32 °F). The tolerances indicated cannot be respected. A special choice of material is required for this temperature range. This cannot be processed through the standard product selection system.

Influence of ambient temperature

Depends on the head transmitter used. For details, see the Technical Information.

Self heating

RTD elements are passive resistors that are measured using an external current. This measurement current causes a self-heating effect in the RTD element itself, which in turn creates an additional measurement error. In addition to the measurement current, the size of the measurement error is also affected by the temperature conductivity and flow velocity of the process. This self-heating error is negligible when an Endress+Hauser iTEMP temperature transmitter (very small measurement current) is connected.

Response time

Tests have been performed in water at 0.4 m/s (according to IEC 60751) and with a 10 K temperature step change.

Response time without heat transfer paste, in water. Typical values in seconds (s) [1)]

Thermowell diameter	Type of tip	Standard Pt100 (TF)		iTHERM QuickSens		iTHERM StrongSens		Wire wound sensor (WW)		Thermocouple					
										Type J		Type K		Type N	
		t_{50}	t_{90}	t_{50}	t_{90}	t_{50}	t_{90}	t_{50}	t_{90}	t_{50}	t_{90}	t_{50}	t_{90}	t_{50}	t_{90}
9x1.25 mm (0.35x0.04 in)	Straight	21	59	11	46	21	62	23	62	20	59	20	60	20	59
	Reduced	8	20	2	7	-	-	8	20	6	18	7	20	-	-
	Tapered	15	42	4	17	-	-	14	41	12	38	13	40	-	-
11x2 mm (0.43x0.08 in)	Straight	32	97	15	71	29	92	39	120	32	90	28	86	27	79
	Reduced	7	19	2	6	-	-	10	20	8	20	8	20	-	-
	Fast response	7	15	3	9	11	20	6	13	7	16	9	19	7	15
12x2.5 mm (0.47x0.10 in)	Straight	41	95	11	58	31	96	33	96	31	77	26	63	25	53
	Tapered	22	68	8	38	20	65	24	73	23	58	22	58	19	62
	Straight (fast response)	8	16	3	11	12	22	7	14	8	16	10	20	8	17
	Tapered (fast response)	7	16	3	11	11	21	8	17	8	16	10	20	8	17
14x2 mm (0.55x0.08 in)	Straight	74	253	13	105	55	211	78	259	61	223	46	165	52	187
16x3.5 mm (0.63x0.14 in)	Straight	69	220	21	99	38	156	77	245	59	200	47	156	51	175
¼" SCH80 (13.7x3 mm)	Straight	50	166	14	79	36	121	50	158	51	173	38	131	43	145
½" SCH80 (21.3x3.7 mm)	Straight	-	250	-	230	-	250	-	365	-	335	-	335	-	335
½" SCH40 (21.3x2.8 mm)	Straight	-	350	-	390	-	570	-	450	-	450	-	450	-	450

1) If using a thermowell.

Calibration

Calibration of thermometers

Calibration involves comparing the measured values of a device under test (DUT) with those of a more precise calibration standard using a defined and reproducible measurement method. The aim is to determine the deviation of the DUT's measured values from the true value of the measured variable. Two different methods are used for thermometers:

- Calibration at fixed-point temperatures, e.g. at the freezing point of water at 0 °C,
- Calibration compared against a precise reference thermometer.

The thermometer to be calibrated must display the fixed point temperature or the temperature of the reference thermometer as accurately as possible. Temperature-controlled calibration baths with very homogeneous thermal values, or special calibration furnaces into which the DUT and the reference thermometer, where necessary, can project to a sufficient degree, are typically used for thermometer calibrations. The measurement uncertainty can increase due to heat dissipation errors and short immersion lengths. The existing measurement uncertainty is listed on the individual calibration certificate. For accredited calibrations according to ISO17025, the measurement uncertainty shouldn't be twice as high as the accredited measurement uncertainty. If this is exceeded, only a factory calibration can be performed.

Evaluation of thermometers
If a calibration with an acceptable uncertainty of measurement and transferable measurement results is not possible, Endress+Hauser offers customers a thermometer evaluation measurement service, if technically feasible. This is the case when:
- The process connections/flanges are too big or the immersion length (IL) is too short to allow the DUT to be immersed sufficiently in the calibration bath or furnace (see the following table), or
- Due to heat conduction along the thermometer tube, the resulting sensor temperature generally deviates significantly from the actual bath/furnace temperature.

The measured value of the DUT is determined using the maximum possible immersion depth and the specific measuring conditions and measurement results are documented on an evaluation certificate.

Sensor-transmitter matching
The resistance/temperature curve of platinum resistance thermometers is standardized but in practice it is rarely possible to keep to the values precisely over the entire operating temperature range. For this reason, platinum resistance sensors are divided into tolerance classes, such as Class A, AA or B as per IEC 60751. These tolerance classes describe the maximum permissible deviation of the specific sensor characteristic curve from the standard curve, i.e. the maximum temperature-dependent characteristic error that is permitted. The conversion of measured sensor resistance values to temperatures in temperature transmitters or other meter electronics is often susceptible to considerable errors as the conversion is generally based on the standard characteristic curve.

When using temperature transmitters from Endress+Hauser, this conversion error can be reduced significantly by sensor-transmitter matching:
- Calibration at three temperatures at least and determination of the actual temperature sensor characteristic curve,
- Adjustment of the sensor-specific polynomial function using Calendar-van Dusen (CvD) coefficients,
- Configuration of the temperature transmitter with the sensor-specific CvD coefficients for resistance/temperature conversion, and
- another calibration of the reconfigured temperature transmitter with connected resistance thermometer.

Endress+Hauser offers this kind of sensor-transmitter matching as a separate service. Furthermore, the sensor-specific polynomial coefficients of platinum resistance thermometers are always provided on every Endress+Hauser calibration certificate where possible, e.g. at least three calibration points, so that users themselves can also appropriately configure suitable temperature transmitters.

For the device, Endress+Hauser offers standard calibrations at a reference temperature of −80 to +600 °C (−112 to +1 112 °F) based on the ITS90 (International Temperature Scale). Calibrations in other temperature ranges are available from your Endress+Hauser sales center on request. Calibrations are traceable to national and international standards. The calibration certificate is referenced to the serial number of the device. Only the insert is calibrated.

Minimum insertion length (IL) for inserts required to perform a correct calibration

Due to restrictions of the furnace geometries, minimum immersion lengths must be maintained at high temperatures in order to be able to perform a calibration with acceptable measurement uncertainty. The same applies when a temperature head transmitter is used. Due to the heat dissipation, minimum immersion lengths must be maintained in order to ensure the functionality of the transmitter −40 to +85 °C (−40 to +185 °F).

Calibration temperature	Minimum immersion length (IL) in mm without head transmitter
−196 °C (−320.8 °F)	120 mm (4.72 in) [1]
−80 to 250 °C (−112 to 482 °F)	No minimum immersion length needed [2]
251 to 550 °C (483.8 to 1022 °F)	300 mm (11.81 in)
551 to 600 °C (1023.8 to 1 112 °F)	400 mm (15.75 in)

1) With TMT a minimum of 150 mm (5.91 in) is required
2) At a temperature of +80 to +250 °C (+176 to +482 °F) with TMT a minimum of50 mm (1.97 in) is required

Insulation resistance

- RTD:
  Insulation resistance according to IEC 60751 > 100 MΩ at 25 °C between terminals and sheath material measured with a minimum test voltage of 100 V DC
- TC:
  Insulation resistance according to IEC 1515 between terminals and sheath material with a test voltage of 500 V DC:
  - > 1 GΩ at 20 °C
  - > 5 MΩ at 500 °C

Installation

Orientation

No restrictions. However, self-draining in the process should be guaranteed depending on the application.

Installation instructions

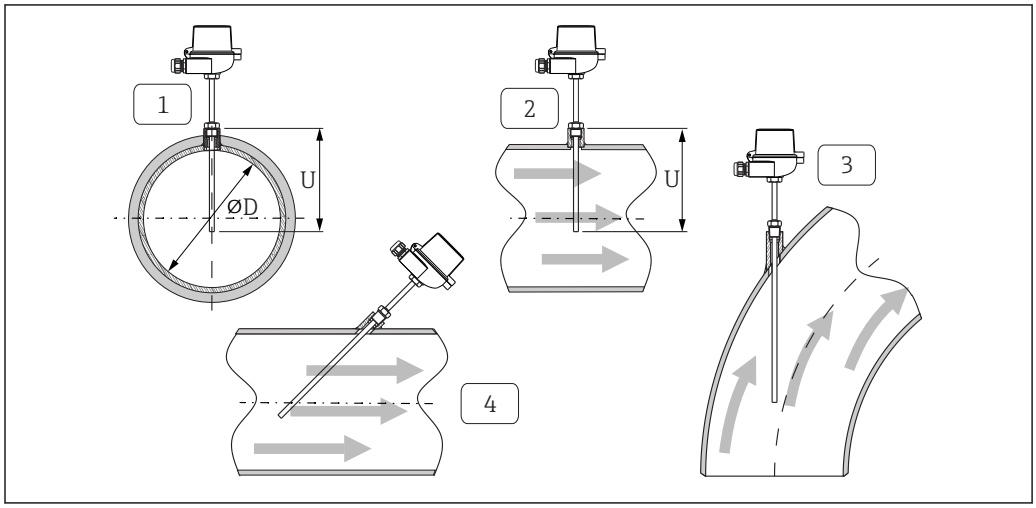

15 Installation examples

1 - 2 In pipes with a small cross-section, the sensor tip should reach or extend slightly past the center axis of the pipe (=U).
3 - 4 Slanted orientation.

The immersion length of the thermometer influences the accuracy. If the immersion length is too small, errors in the measurement are caused by heat conduction via the process connection and the container wall. Therefore, if installing in a pipe the immersion length should be at least half the pipe diameter. Installation at an angle (see 3 and 4) could be another solution. When determining the immersion length or installation depth all the parameters of the thermometer and of the process to be measured must be taken into account (e.g. flow velocity, process pressure).

The counterparts for process connections and seals are not supplied with the thermometer and must be ordered separately if needed.

Environment

Ambient temperature range

Terminal head	Temperature in °C (°F)
Without mounted head transmitter	Depends on the terminal head used and the cable gland or fieldbus connector, see 'Terminal heads' section
With mounted head transmitter	−40 to 85 °C (−40 to 185 °F)
With mounted head transmitter and display	−20 to 70 °C (−4 to 158 °F)

Extension neck	Temperature in °C (°F)
iTHERM QuickNeck	−50 to +140 °C (−58 to +284 °F)

Storage temperature

For information, see the ambient temperature above.

Humidity

Depends on the transmitter used. If Endress+Hauser iTEMP head transmitters are used:
- Condensation permitted as per IEC 60 068-2-33
- Max. rel. humidity: 95% as per IEC 60068-2-30

Climate class

As per EN 60654-1, Class C

Degree of protection

Max. IP 66 (NEMA Type 4x encl.)	Depends on the design (terminal head, connector, etc.)
Partly IP 68	Tested in 1.83 m (6 ft) over 24 h

Shock and vibration resistance

The Endress+Hauser inserts exceed the IEC 60751 requirements stating a shock and vibration resistance of 3g within a range of 10 to 500 Hz. The vibration resistance of the measurement point depends on the sensor type and design. See the following table:

Sensor type	Vibration resistance for the sensor tip
Pt100 (WW)	> 30 m/s² (3g)
Pt100 (TF), basic	
Pt100 (TF)	> 40 m/s² (4g)
iTHERM StrongSens Pt100 (TF) iTHERM QuickSens Pt100 (TF), version: Ø6 mm (0.24 in)	> 600 m/s² (60g)
Thermocouple inserts	> 30 m/s² (3g)

Electromagnetic compatibility (EMC)

Depends on the head transmitter used. For details see the Technical Information.

Process

Process temperature range

Depends on the type of sensor and thermowell material used, maximum −200 to +1 100 °C (−328 to +2 012 °F).

Process pressure range

The maximum possible process pressure depends on various influencing factors, such as the design, process connection and process temperature. For information on the maximum possible process pressures for the individual process connections, see the "Process connection" section.

It is possible to check the mechanical loading capacity as a function of the installation and process conditions online using the Sizing Thermowell calculation tool in the Endress+Hauser Applicator software. https://portal.endress.com/webapp/applicator

Permitted flow velocity depending on the immersion length

The highest flow velocity tolerated by the thermometer diminishes with increasing sensor immersion length exposed to the flowing fluid. In addition it is dependent on the diameter of both the thermometer tip and thermowell, on the type of measuring medium, the process temperature and the process pressure. The following figures exemplify the maximum permitted flow velocities in water and superheated steam at a process pressure of 50 bar (725.2 psi).

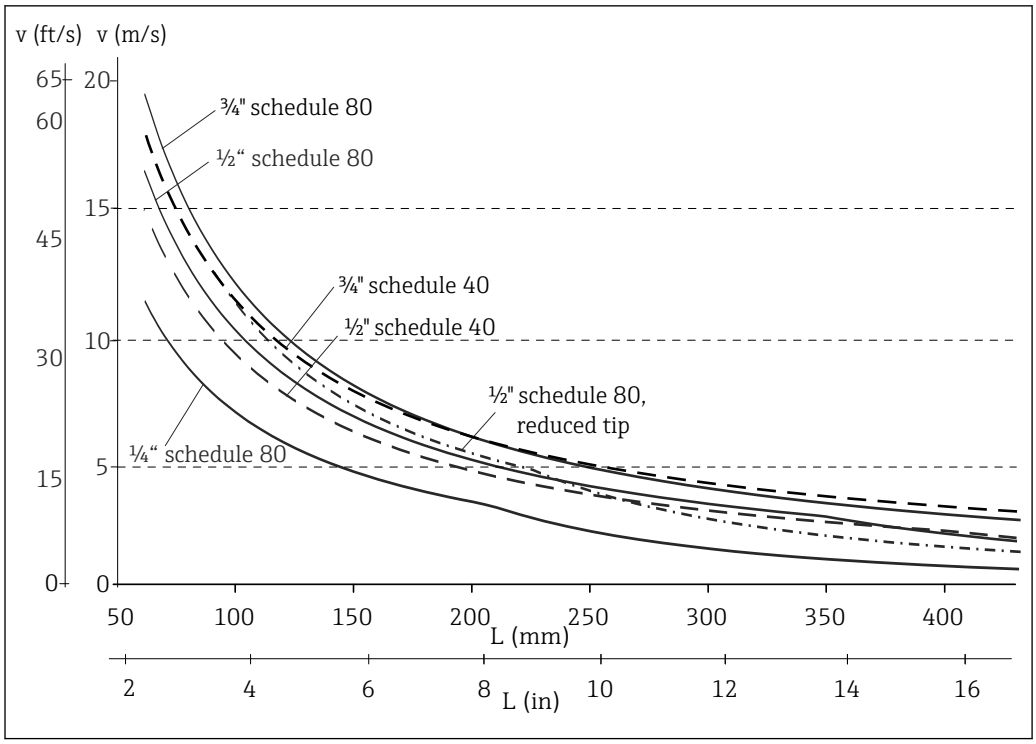

16 Permitted flow velocities with different thermometer diameters in the process medium water at T = 50 °C (122 °F)

L Unsupported immersion length of the thermowell, material 1.4401 (316)
v Flow velocity

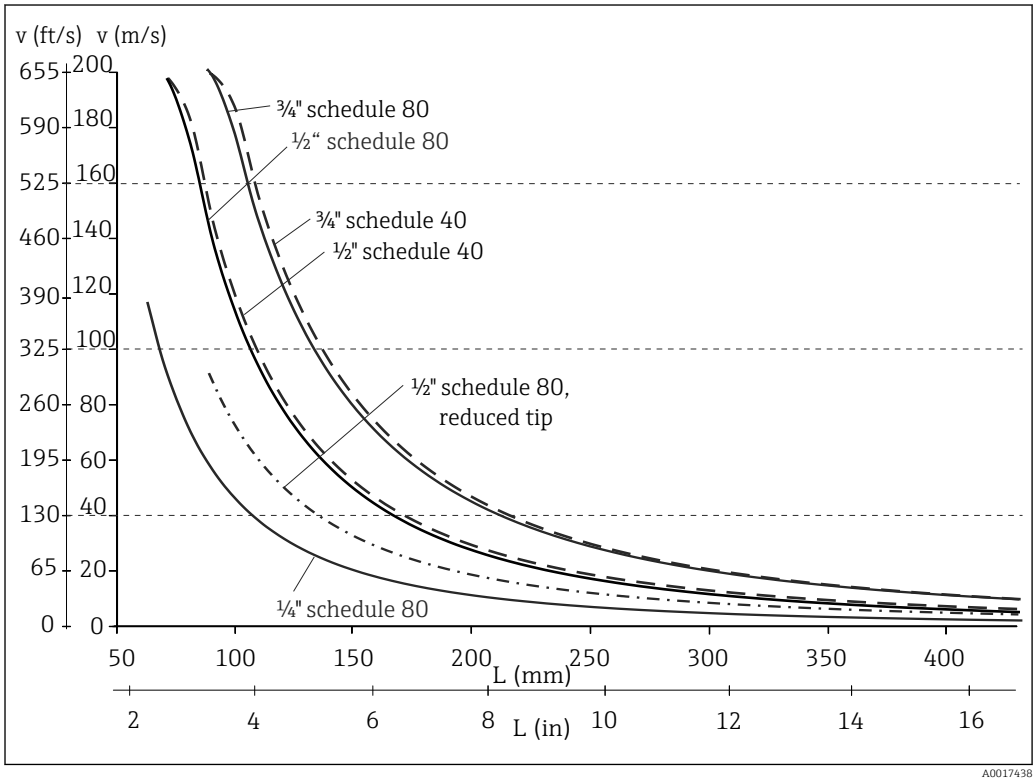

17 Permitted flow velocities with different thermometer diameters in the process medium superheated steam at T = 400 °C (752 °F)

L Unsupported immersion length of the thermowell, material 1.4401 (316)
v Flow velocity

Permitted flow velocity depending on the immersion length and process medium

The highest flow velocity tolerated by the thermometer diminishes with increasing insert immersion length exposed to the flowing fluid. The flow velocity is also dependent on the diameter of the thermometer tip, the type of medium being measured, the process temperature and the process pressure. The following figures exemplify the maximum permitted flow velocities in water and superheated steam at a process pressure of 50 bar (725 psi).

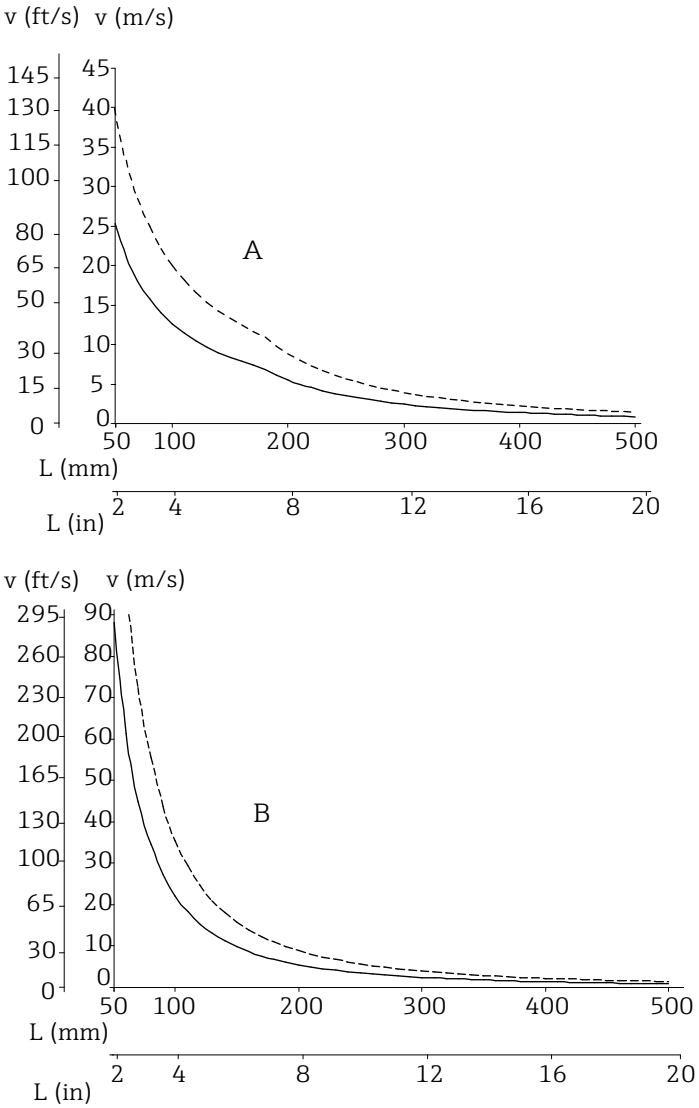

A0008605

18 Maximum flow velocity with thermowell diameter 9 mm (0.35 in)(————) or 12 mm (0.47 in) (-----)

A Medium: water at T = 50 °C (122 °F)
B Medium: superheated steam at T = 400 °C (752 °F)
L Immersion length
v Flow velocity

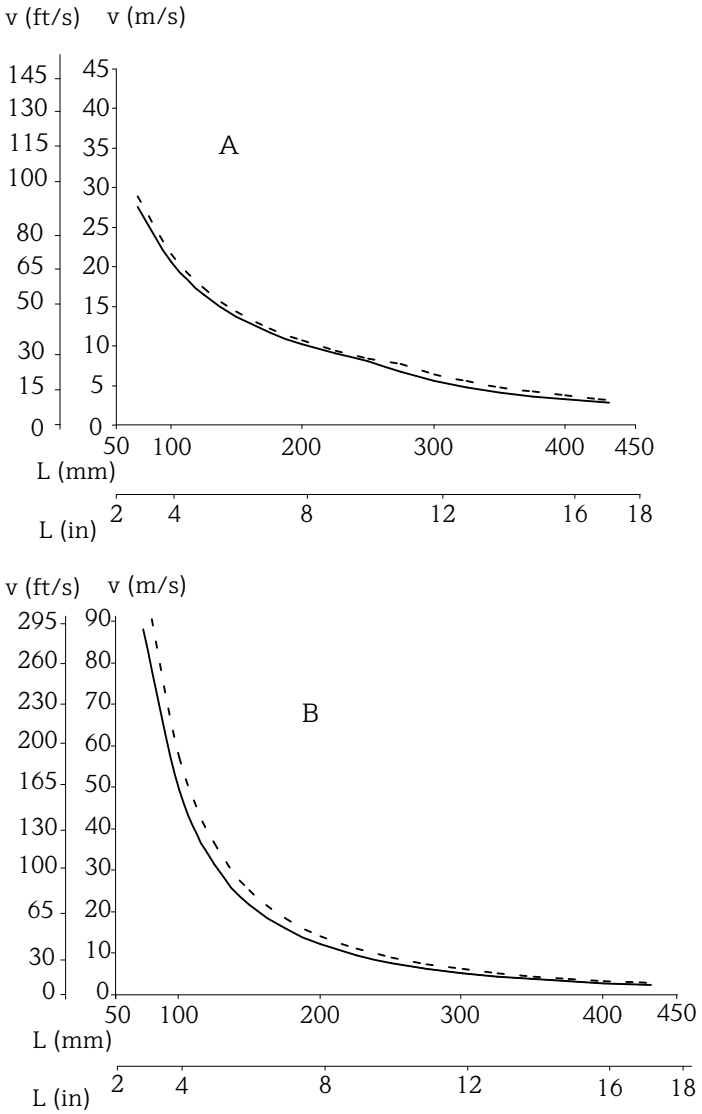

A0017169

19 Maximum flow velocity with thermowell diameter 14 mm (0.55 in)(————) or 15 mm (0.6 in) (-----)

A Medium: water at T = 50 °C (122 °F)
B Medium: superheated steam at T = 400 °C (752 °F)
L Immersion length
v Flow velocity

Mechanical construction

Design, dimensions

All dimensions in mm (in). The design of the thermometer depends on the general design version used:

- Thermometer for installation in a separate thermowell
- Thermometer with thermowell, continuous, similar to DIN 43772 Form 2 G/F, 3 G/F
- Thermometer with thermowell, hexagonal, similar to DIN 43772 Form 5, 8
- Thermometer with thermowell, without lagging - similar to DIN 43772 Form 2

Various dimensions, such as the immersion length U, the lagging length T and the extension neck length E, for example, are variable values and are therefore indicated as items in the following dimensional drawings.

Variable dimensions:

Item	Description
E	Extension neck length, variable depending on the configuration or predefined for the version with iTHERM QuickNeck
IL	Insertion length of insert
L	Thermowell length (U+T)
B	Thermowell base thickness: predefined, depends on thermowell version (see also the individual table data)
T	Length of lagging: variable or predefined, depends on thermowell version (see also the individual table data)
U	Immersion length: variable, depending on the configuration
Hd, SL	Variable for calculating the insertion length of the insert, depending on different screw-in lengths in terminal head thread M24x1.5 or ½" NPT, see insert length calculation (IL).
ØID	Thermowell diameter; see the following table

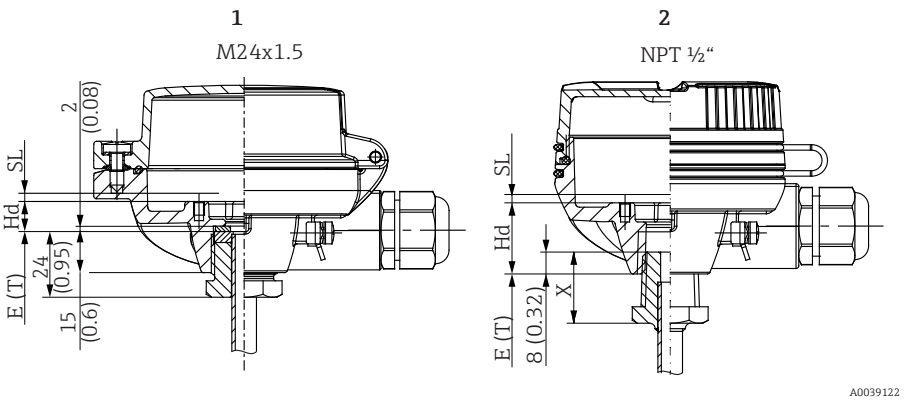

20 *Different screw-in lengths in terminal head thread for M24x1.5 and ½" NPT*

1 Metric thread M24x1.5
2 Conical thread NPT ½"
Hd Distance in terminal head
SL Spring travel

Thermometer for installation in a separate thermowell

The thermometer is supplied without a thermowell but is designed for use with a thermowell.

This version cannot be used for direct immersion in the process medium!

The thermometer can be configured as follows

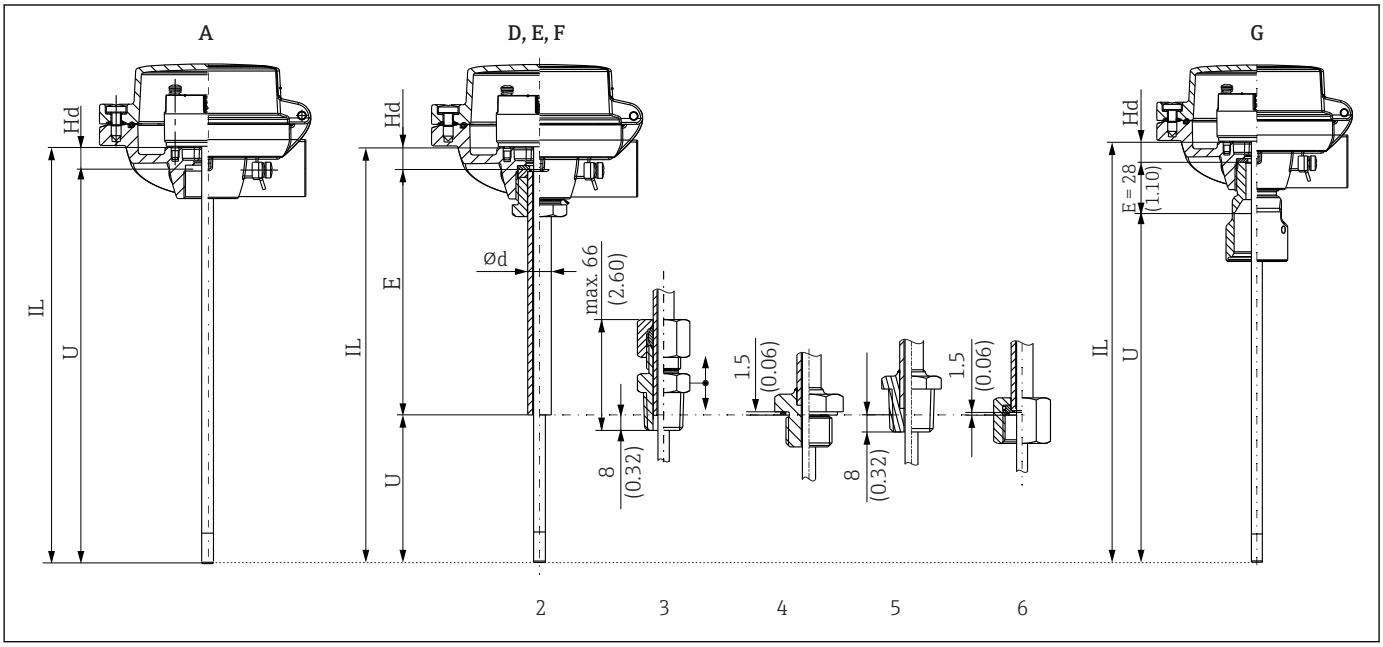

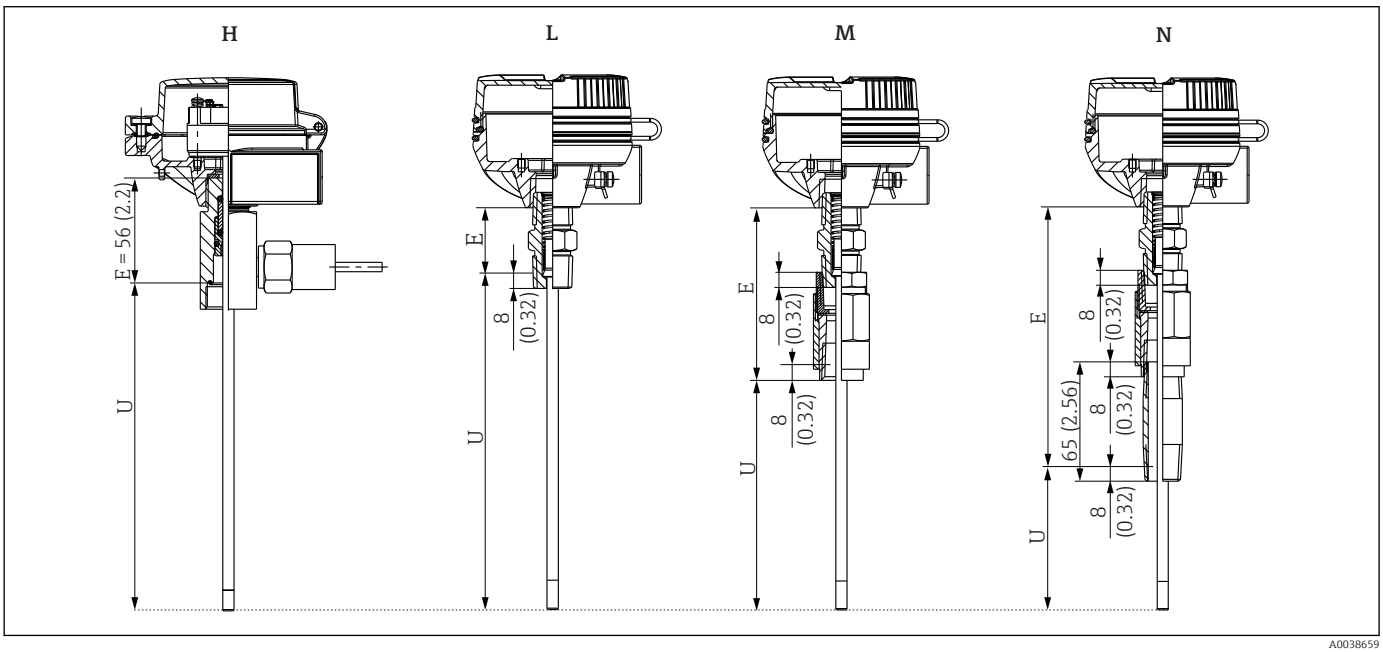

- Option A: without neck (female thread M24, M20x1.5 or NPT ½") [1]
- Option D, E, F: removable extension neck; thread for connection to thermowell must be selected; available versions:
  - Without process connection (2)
  - Compression fitting (3)
  - Metric thread (4)
  - Tapered thread (5)
  - Cap nut (6)
- Option G: QuickNeck upper part
- Option H: neck with second process seal (thread M24x1.5 female fitting to thermowell)
- Options L, M, N: NPT ½" nipple, nipple-union or nipple-union-nipple connection

1) Configuration feature 30: thermometer version

Calculation of insert length IL

Option A: without neck	IL = U + Hd
Option A for use with NAMUR thermowell	Thermowell TT151 type NF1: U_{TM131} = 304 mm (11.97 in); IL = 315 mm (12.4 in) Thermowell TT151 type NF2: U_{TM131} = 364 mm (14.33 in); IL = 375 mm (14.8 in) Thermowell TT151 type NF3: U_{TM131} = 424 mm (16.7 in); IL = 435 mm (17.13 in)

Options D, E, F: removable extension neck	Version 2: IL = U + E + Hd Version 3: IL = U + E + Hd Version 4: IL = U + E + Hd+GC Version 5: IL = U + E + Hd Version 6: IL = U + E + Hd+GC
Option G: QuickNeck upper part	IL = U + E + Hd
Option H: second process seal	IL = U + E + Hd+GC Length E = 56 mm (2.2 in) for M24x1.5 to terminal head Length E = 48 mm (1.9 in) for NPT ½" to terminal head
Options L, M, N: nipple connection	IL = U + T + E + Hd - B + SL E and Hd depend on the type of nipple: ▪ Standard: ▪ E = 35 mm (1.38 in) ▪ Hd = −17 mm (−0.67 in) ▪ Nipple for flameproof enclosure: ▪ E = 47 mm (1.85 in) ▪ Hd = 10 mm (0.39 in) SL = spring pre-load = 6 mm (0.24 in)
Hd for head thread M24x1.5 (TA30A, TA30D, TA30P, TA30R, TA20AB) = 11 mm (0.43 in) Hd for head thread NPT ½" (TA30EB) = 26 mm (1.02 in) Hd for head thread NPT ½" (TA30H) = 41 mm (1.61 in) GC seal compensation = 2 mm (0.08 in)	

Thermometer with thermowell, continuous

The thermometer always has a thermowell.

Thermowell, continuous: above the process connection, a part of the original thermowell is kept as thermowell lagging T. The thermowell is based on thermowells DIN 43772 Forms 2G, 2F or 3G and 3F. Form 2 describes a straight thermowell tip, Form 3 a tapered one. [2] The letter G describes a thread, and F describes a flange, as the process connection.

The thermometer can be configured as follows [3]

2) See also configuration feature 070: Shape of tip
3) See also configuration feature 030: Thermometer design

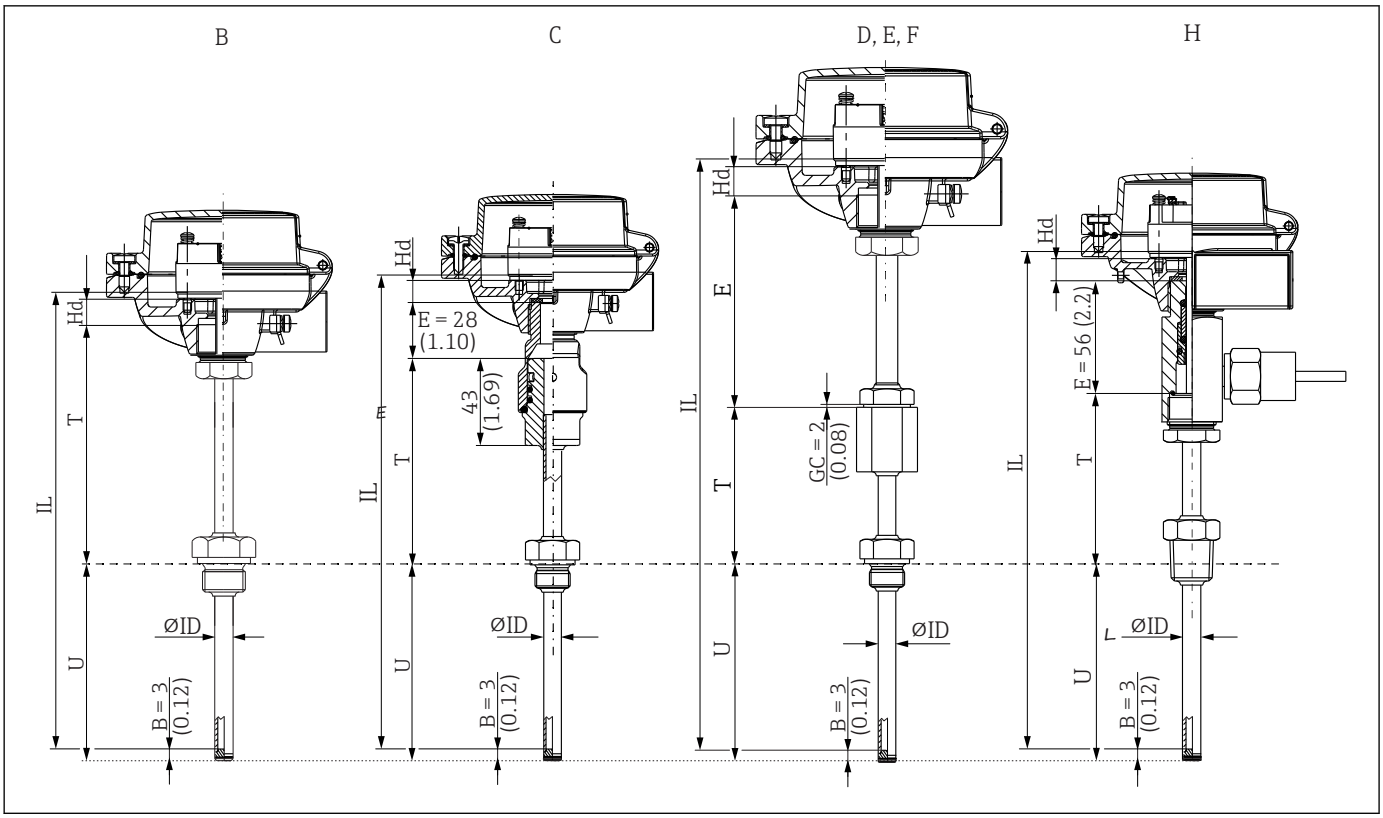

21 These thermometer versions use the insert TS111 with a washer.

- Option B: Lagging, DIN 43772 Form 2G, 3F, 3G, 3F
- Option C: QuickNeck for fast tool-free calibration
- Option D, E, F: With additional removable extension neck; diameter 11 mm (0.43 in) or 12 mm (0.47 in); thread to thermowell G ½" (optional M20)
- Option H: Extension neck with second process seal

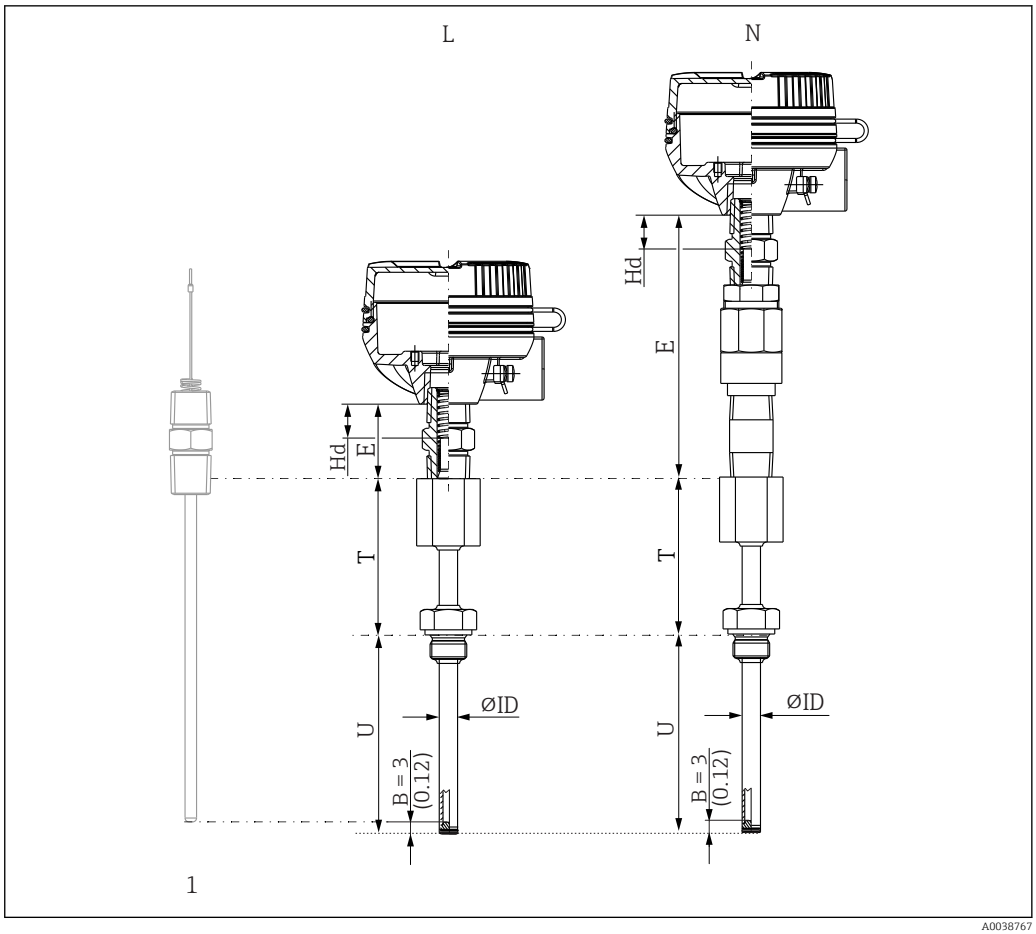

22 These versions use the central-spring-loaded insert TS211.

- 1: Insert
- Option L: Thermowell with nipple connection
- Option N: Thermowell with nipple-union-nipple connection

Calculation of insert length IL

Version B	IL = U + T + Hd - B + SL SL = spring pre-load = 2 mm (0.08 in)
Version C	IL = U + T + E + Hd - B + SL E = 28 mm (1.10 in) for head thread: M24x1.5 E = 21 mm (0.83 in) for head thread: NPT ½" SL = spring pre-load = 2 mm (0.08 in)
Versions D, E, F	IL = U + T + E + Hd - B + SL + GC SL = spring pre-load = 2 mm (0.08 in) GC = gasket compensation only for metric threads = 2 mm (0.08 in)
Version H	IL = U + T + E + Hd - B + SL E = 56 mm (2.2 in) for head thread: M24x1.5 E = 48 mm (1.9 in) for head thread: NPT ½" SL = spring pre-load = 2 mm (0.08 in)
Hd for head thread M24x1.5 (TA30A, TA30D, TA30P, TA30R, TA20AB) = 11 mm (0.43 in) Hd for head thread NPT ½" (TA30EB) = 26 mm (1.02 in) Hd for head thread NPT ½" (TA30H) = 41 mm (1.61 in)	

Versions L and N	IL = U + T+ E + Hd - B + SL
	
	E and Hd depend on the type of nipple:
	▪ Standard:
	  ▪ E = 35 mm (1.38 in)
	  ▪ Hd = –17 mm (–0.67 in)
	▪ Nipple for flameproof enclosure:
	  ▪ E = 47 mm (1.85 in)
	  ▪ Hd = 10 mm (0.39 in)
	
	SL = spring pre-load = 6 mm (0.24 in)

B = base thickness: ▪ 3 mm (0.12 in) ▪ 4 mm (0.16 in) for inch pipe diameter ▪ 5 mm (0.2 in) for pipe diameter 12x9 mm with tapered tip	

Thermometer with thermowell and hexagonal extension

The thermometer always has a thermowell.

Thermowell, hexagonal extension: above the process connection, the thermowell lagging T is hexagonal. Form 5 describes a female thread as the thermometer connection, Form 8 a male thread.

The thermometer can be configured as follows [3)]

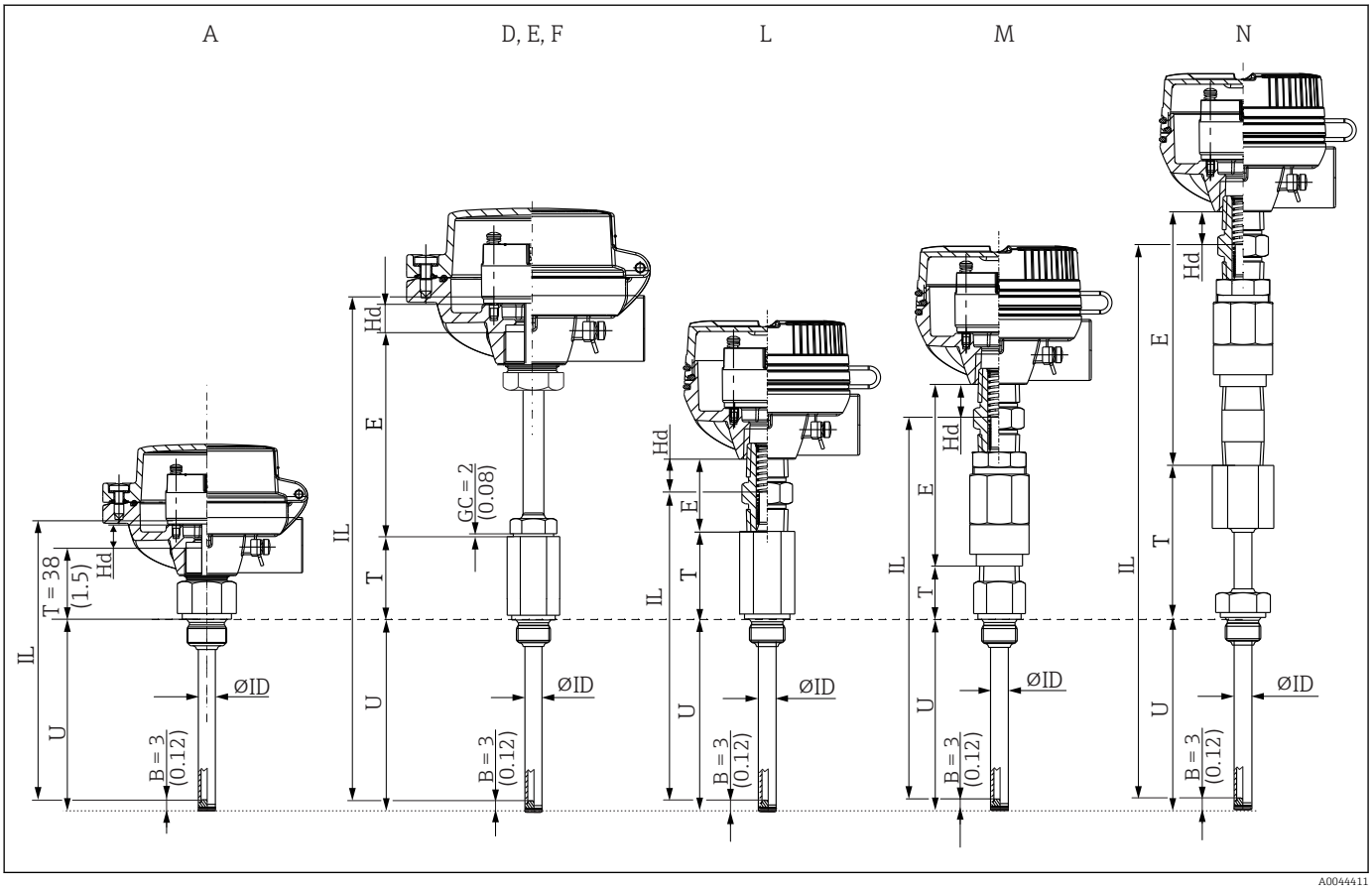

A0044411

- Option A: Without extension neck, similar to DIN 43772 Forms 2, 5, 8
- Option D, E, F: With additional removable extension neck, similar to DIN 43772 ; diameter 11 mm (0.43 in) or 12 mm (0.47 in); thread to thermowell G ½" (optional M20)
- Option L: With nipple connection, NPT ½"
- Option M: With nipple-union connection, NPT ½"
- Option N: With nipple-union-nipple connection, NPT ½"

Calculation of insert length IL

Version A	IL = U + T + Hd - B + SL T = 38 mm (1.5 in) Hd for head thread M24x1.5 (TA30A, TA30D, TA30P, TA30R, TA20AB) = 11 mm (0.43 in) Hd for head thread NPT ½" (TA30EB) = 26 mm (1.02 in) Hd for head thread NPT ½" (TA30H) = 41 mm (1.61 in) SL = spring pre-load = 2 mm (0.08 in)
Versions D, E, F	IL = U + T + E + Hd - B + SL + GC Hd for head thread M24x1.5 (TA30A, TA30D, TA30P, TA30R, TA20AB) = 11 mm (0.43 in) Hd for head thread NPT ½" (TA30EB) = 26 mm (1.02 in) Hd for head thread NPT ½" (TA30H) = 41 mm (1.61 in) SL = spring pre-load = 2 mm (0.08 in) GC = gasket compensation only for metric threads = 2 mm (0.08 in)

Version L	IL = U + T + E + Hd - B + SL
	E and Hd depend on the type of nipple:
	▪ Standard:
	  ▪ E = 35 mm (1.38 in)
	  ▪ Hd = –17 mm (–0.67 in)
	▪ Nipple for flameproof enclosure:
	  ▪ E = 47 mm (1.85 in)
	  ▪ Hd = 10 mm (0.39 in)
	SL = spring pre-load = 6 mm (0.24 in)

Version M	
Version N	
B = base thickness: ▪ 3 mm (0.12 in) ▪ 4 mm (0.16 in) for inch pipe diameter ▪ 5 mm (0.2 in) for pipe diameter 12x9 mm with tapered tip	

Thermometer with thermowell without lagging

The thermometer always has a thermowell.

Thermowell, without lagging (T = 0): The thermowell is available without a process connection or with an adjustable process connection, e.g. compression fitting. In this case, the immersion length U and the lagging length T are not predefined when an adjustable process connection is used.

The thermometer can be configured as follows [3)]

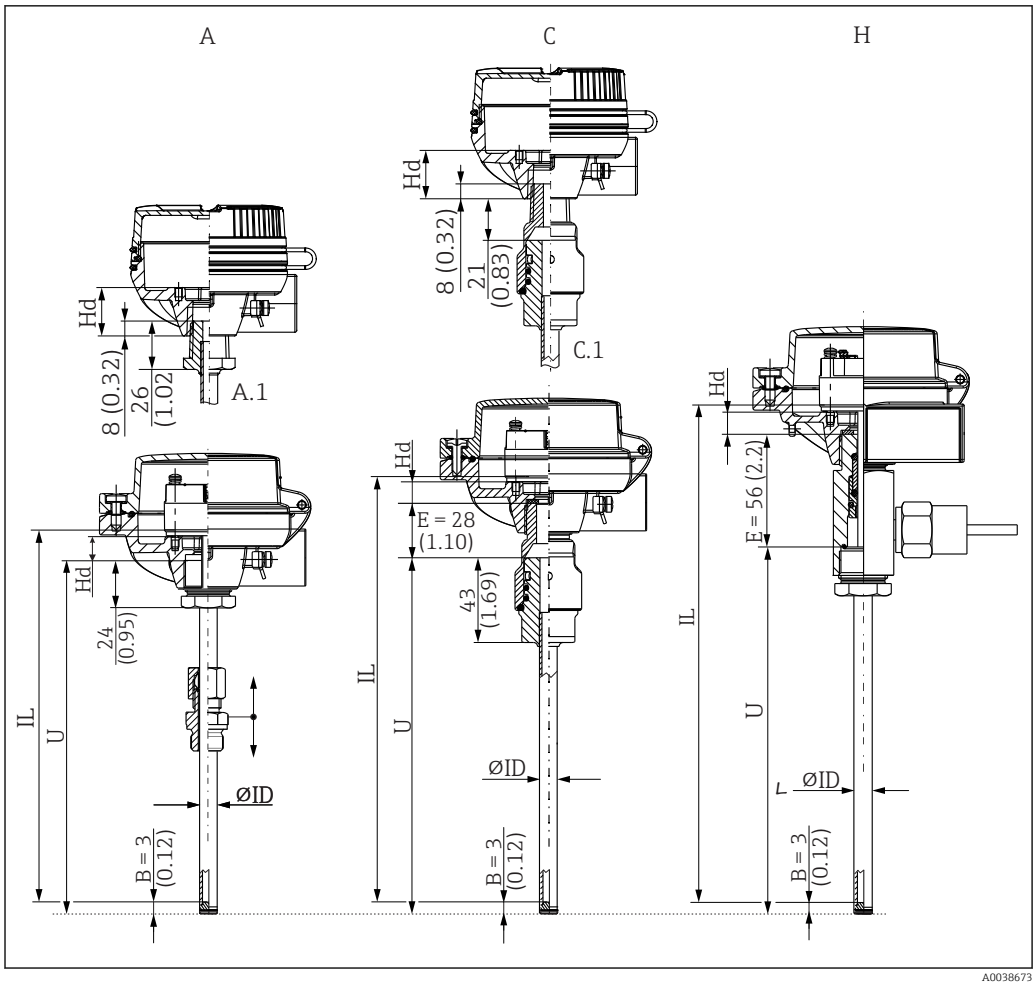

- Option A: Without extension neck, similar to DIN 43772 Forms 2, 5, 8 (with compression fitting)
  A.1: Related terminal head with NPT ½"
- Option C: QuickNeck - for fast, tool-free re-calibration
  C.1: Related terminal head with NPT ½"
- Option H: With extension neck with second process seal

Note the following when replacing an Endress+Hauser TR12 thermometer with the TM131 thermometer:

Immersion length $U_{(TM131)}$ = immersion length $L_{(TR12)}$ + 24 mm (0.95 in)

Calculation of insert length IL

Version A	IL = U + Hd - B + SL SL = spring pre-load = 2 mm (0.08 in)
Version C	IL = U + E + Hd - B + SL E = 21 mm (0.83 in) for terminal heads TA30H E = 28 mm (1.1 in) for terminal heads TA30A and TA30D SL = spring pre-load = 2 mm (0.08 in)
Version H	IL = U + E + Hd - B + SL E = 48 mm (1.89 in) for terminal heads TA30H and TA30EB E = 56 mm (2.2 in) for other terminal heads SL = spring pre-load = 2 mm (0.08 in)
Hd for head thread M24x1.5 (TA30A, TA30D, TA30P, TA30R, TA20AB) = 11 mm (0.43 in) Hd for head thread NPT ½" (TA30EB) = 26 mm (1.02 in) Hd for head thread NPT ½" (TA30H) = 41 mm (1.61 in) B = base thickness: ▪ 3 mm (0.12 in) ▪ 4 mm (0.16 in) for inch pipe diameter ▪ 5 mm (0.2 in) for pipe diameter 12x9 mm with tapered tip	

Possible combinations of the thermowell versions with the available process connections

Process connection and size	Thermowell diameter							
	9 x 1.25 mm	11 x 2 mm	12 x 2.5 mm	14 x 2 mm 316Ti	16 x 3.5 mm 316L	¼" 316	½" 316	½" 446
Diameter tolerances								
Lower tolerance limit (mm)	0,0	0,0	0,0	0,0	0,0	-0,79	-0,79	-0,79
Upper tolerance limit (mm)	+0,1	+0,1	+0,1	+0,1	+0,1	+0,4	+0,4	+0,4
Thread								
M18 x 1.5, 316L/316Ti	316L or 316Ti	316L or 316Ti	-	-	-	-	-	-
M20 x 1.5, 316L/316Ti	316L or 316Ti	316L or 316Ti	316Ti	316Ti	-	-	-	-
M27 x 2, 316L/316Ti	316L or 316Ti	316L or 316Ti	316Ti	316Ti	316L	-	-	-
M33 x 2, 316L/316Ti	316L or 316Ti	316L or 316Ti	316Ti	316Ti	316L	-	-	-
NPT ½", 316L/316Ti	316L or 316Ti	316L or 316Ti	316Ti	316Ti	-	316	-	-
NPT ¾", 316L/316Ti	316L or 316Ti	316L or 316Ti	316Ti	316Ti	316L	316	316	446
NPT 1", 316L/316Ti	316L or 316Ti	316L or 316Ti	316Ti	316Ti	316L	316	316	446
G 3/8, 316L/316Ti	316L or 316Ti	316L or 316Ti	316Ti	-	-	-	-	-
G ½", 316L/316Ti	316L or 316Ti	316L or 316Ti	316Ti	316Ti	-	-	-	-
G ¾", 316L/316Ti	316L or 316Ti	316L or 316Ti	316Ti	316Ti	316L	-	-	-
G 1", 316L/316Ti	316L or 316Ti	316L or 316Ti	316Ti	316Ti	316L	-	-	-
R ½", 316L/316Ti	316L or 316Ti	316L or 316Ti	316Ti	316Ti	-	-	-	-
R ¾", 316L/316Ti	316L or 316Ti	316L or 316Ti	316Ti	316Ti	316L	-	-	-
M20 x 1.55, 321	-	-	321	-	-	-	-	-
M27 x 2, 321	-	-	321	-	-	-	-	-
M33 x 2, 321	-	-	321	-	-	-	-	-
NPT ½", 321	-	-	321	-	-	-	-	-
G ½", 321	-	-	321	-	-	-	-	-
M20 x 1.5, AlloyC276	AlloyC276	AlloyC276	-	-	-	-	-	-
NPT ½", AlloyC276	AlloyC276	AlloyC276	-	-	-	-	-	-
G ½", AlloyC276	AlloyC276	AlloyC276	-	-	-	-	-	-
M20 x 1.5, AlloyC600	Alloy600	Alloy600	-	-	-	-	-	-
NPT ½", AlloyC600	Alloy600	Alloy600	-	-	-	-	-	-
G ½", AlloyC600	Alloy600	Alloy600	-	-	-	-	-	-
Weld-in adapter								

Process connection and size	Thermowell diameter							
	9 x 1.25 mm	11 x 2 mm	12 x 2.5 mm	14 x 2 mm 316Ti	16 x 3.5 mm 316L	¼" 316	½" 316	½" 446
Cylindrical, D = 30 mm (1.18 in), 316L	316L, 316Ti, Alloy600, AlloyC276	-	-	-	-	-	-	-
Compression fitting								
NPT ½", 316L	316L, 316Ti, Alloy600, AlloyC276	316L or 316Ti	316Ti	316Ti	-	-	-	-
G ½", 316L	316L, 316Ti, Alloy600, AlloyC276	316L or 316Ti	316Ti	316Ti	-	-	-	-
G 1‴, 316L	316L, 316Ti, Alloy600, AlloyC276	316L or 316Ti	316Ti	316Ti	-	-	-	-
Flanged	316L	316L	316Ti	316Ti	316L	316	316	446
ANSI 1" 150 RF B16.5, 316L	316L	316L	316Ti	316Ti	316L	316	316	446
ANSI 1 ½" 150 RF B16.5, 316L	316L	316L	316Ti	316Ti	316L	316	316	446
ANSI 2" 150 RF B16.5, 316L	316L	316L	316Ti	316Ti	316L	316	316	446
ANSI 2" 300 RF B16.5, 316L	316L	316L	316Ti	316Ti	316L	316	316	446
DN15 PN40 B1 EN1092-1, 316L/316Ti	316L or 316Ti	316L or 316Ti	316Ti	316Ti	316L	316	-	-
DN15 PN40 C EN1092-1, 316L/316Ti	316L or 316Ti	316L or 316Ti	316Ti	316Ti	316L	316	-	-
DN25 PN20 B1 ISO7005-1, 316L/316Ti	316L or 316Ti	316L or 316Ti	316Ti	316Ti	316L	316	316	446
DN25 PN40 B1 EN1092-1, 316L/316Ti	316L or 316Ti	316L or 316Ti	316Ti	316Ti	316L	316	316	446
DN25 PN40 C EN1092-1, 316L/316Ti	316L or 316Ti	316L or 316Ti	316Ti	316Ti	316L	316	316	446
DN25 PN100 B2 EN1092-1, 316L/316Ti	316L or 316Ti	316L or 316Ti	316Ti	316Ti	316L	316	316	446
DN40 PN40 B1 EN1092-1, 316L/316Ti	316L or 316Ti	316L or 316Ti	316Ti	316Ti	316L	316	316	446
DN50 PN40 B1 EN1092-1, 316L/316Ti	316L or 316Ti	316L or 316Ti	316Ti	316Ti	316L	316	316	446
DN25 PN40 B1 EN1092-1, AlloyC276 > 316L	AlloyC279	AlloyC280	-	-	-	-	-	-
DN50 PN40 B1 EN1092-1, AlloyC276 > 316L	AlloyC280	AlloyC281	-	-	-	-	-	-
DN25 PN40 B1 EN1092-1, AlloyC600 > 316L	Alloy600	Alloy600	-	-	-	-	-	-
DN50 PN40 B1 EN1092-1, AlloyC600 > 316L	Alloy600	Alloy600	-	-	-	-	-	-
DN25 PN40 B1 EN1092-1, tantalum > 316Ti	-	316Ti + 13 mm	316Ti + 13 mm	-	-	-	-	-
DN50 PN40 B1 EN1092-1, tantalum > 316Ti	-	316Ti + 13 mm	316Ti + 13 mm	-	-	-	-	-

Process connection and size	Thermowell diameter							
	9 x 1.25 mm	11 x 2 mm	12 x 2.5 mm	14 x 2 mm 316Ti	16 x 3.5 mm 316L	¼" 316	½" 316	½" 446
DN25 PN40 B1 EN1092-1, PTFE > 316Ti	-	316Ti + 15 mm	-	-	-	-	-	-
DN50 PN40 B1 EN1092-1, PTFE > 316Ti	-	316Ti + 15 mm	-	-	-	-	-	-

Weight

1 to 10 kg (2 to 22 lbs) for standard options.

Material

Lagging and thermowell, insert, process connection.

The temperatures for continuous operation specified in the following table are only intended as reference values for use of the various materials in air and without any significant mechanical load. The maximum operating temperatures can be reduced considerably in cases where abnormal conditions such as high mechanical load occur or in aggressive media.

Please note that the maximum temperature also always depends on the temperature sensor used!

Material name	Short form	Recommended max. temperature for continuous use in air	Properties
AISI 316/1.4401	X5CrNiMo 17-12-2	650 °C (1 202 °F) [1]	▪ Austenitic, stainless steel ▪ High corrosion resistance in general ▪ Particularly high corrosion-resistance in chlorinated and acidic, non-oxidizing atmospheres by adding molybdenum (e.g. phosphoric and sulfuric acids, acetic and tartaric acids with low concentration)
AISI 316L/1.4404 1.4435	X2CrNiMo17-12-2 X2CrNiMo18-14-3	650 °C (1 202 °F) [1]	▪ Austenitic, stainless steel ▪ High corrosion resistance in general ▪ Particularly high corrosion-resistance in chlorinated and acidic, non-oxidizing atmospheres by adding molybdenum (e.g. phosphoric and sulfuric acids, acetic and tartaric acids with low concentration) ▪ Increased resistance to intergranular corrosion and pitting ▪ Compared to 1.4404, 1.4435 has even higher corrosion resistance and a lower delta ferrite content
AISI 316Ti/1.4571	X6CrNiMoTi17-12-2	700 °C (1 292 °F) [1]	▪ Properties comparable with AISI316L ▪ Addition of titanium means increased resistance to intergranular corrosion even after welding ▪ Broad range of uses in the chemical, petrochemical and oil industries as well as in coal chemistry ▪ Can only be polished to a limited extent, titanium streaks can form
Alloy600/2.4816	NiCr15Fe	1 100 °C (2 012 °F)	▪ A nickel/chromium alloy with very good resistance to aggressive, oxidizing and reducing atmospheres, even at high temperatures ▪ Resistance to corrosion caused by chlorine gases and chlorinated media as well as many oxidizing mineral and organic acids, sea water etc. ▪ Corrosion from ultrapure water ▪ Not to be used in sulfur-containing atmospheres

Material name	Short form	Recommended max. temperature for continuous use in air	Properties
AlloyC276/2.4819	NiMo16Cr15W	1 100 °C (2 012 °F)	▪ A nickel-based alloy with good resistance to oxidizing and reducing atmospheres, even at high temperatures ▪ Particularly resistant to chlorine gas and chloride as well as to many oxidizing mineral and organic acids
AISI 321/1.4541	X6CrNiTi18-10	815 °C (1 499 °F)	▪ Austenitic, stainless steel ▪ High resistance to intergranular corrosion even after welding ▪ Good welding characteristics, suitable to all standard welding methods ▪ It is used in many sectors of the chemical industry, petrochemical, and pressurized vessels
AISI 446/~1.4762/ ~1.4749	X10CrAl24 X18CrNi24	1 100 °C (2 012 °F)	▪ A ferritic, heat resistant, high-chromium stainless steel ▪ Very high resistance to reducing sulphurous gases and salts with low content of oxygen ▪ Very good resistance to constant as well as cyclical thermal stress, to incineration ashcorrosion and to melts of copper, lead and tin ▪ Poorly resistant to gases containing nitrogen
Jacket			
PTFE (Teflon)	Polytetrafluorethylene	200 °C (392 °F)	▪ Resistant to almost all chemicals ▪ High temperature-resistance
Tantalum	-	250 °C (482 °F)	▪ With the exception of hydrofluoric acid, fluorine and fluorides, tantalum exhibits excellent resistance to most mineral acids and saline solutions ▪ Prone to oxidation and embrittlement at higher temperatures in air

1) Can be used to a limited extent up to 800 °C (1472 °F) for low mechanical loads and in non-corrosive media. Please contact your Endress+Hauser sales team for further information.

Process connections

Thread

Threaded process connection Male thread	Version		Thread length TL	Width across flats	Max. process pressure
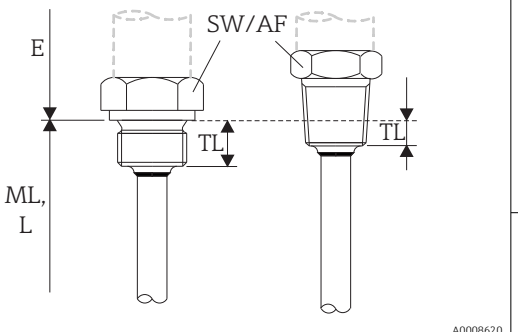	M	M14x1.5	12 mm (0.47 in)	22 mm (0.87 in)	Maximum static process pressure for threaded process connection: [1] 400 bar (5 802 psi) at +400 °C (+752 °F)
		M20x1.5	14 mm (0.55 in)	27 mm (1.06 in)	
		M18x1.5	12 mm (0.47 in)	24 mm (0.95 in)	
		M27x2	16 mm (0.63 in)	32 mm (1.26 in)	
		M33x2	18 mm (0.71 in)	41 mm (1.61 in)	
	G [2]	G ½" DIN / BSP	15 mm (0.6 in)	27 mm (1.06 in)	
		G 1" DIN / BSP	18 mm (0.71 in)	41 mm (1.61 in)	
		G ¾" BSP	15 mm (0.6 in)	32 mm (1.26 in)	
		G 3/8"	12 mm (0.47 in)	24 mm (0.95 in)	
	NPT	NPT ½"	8 mm (0.32 in)	22 mm (0.87 in)	

23 Cylindrical (left side) and conical (right side) version

Threaded process connection Male thread	Version		Thread length TL	Width across flats	Max. process pressure
		NPT ¾"	8.5 mm (0.33 in)	27 mm (1.06 in)	
		NPT 1"	10.2 mm (0.4 in)	41 mm (1.61 in)	
	R	R ¾"	8 mm (0.32 in)	27 mm (1.06 in)	
		R ½"		22 mm (0.87 in)	

1) Maximum pressure specifications only for the thread. The failure of the thread is calculated, taking the static pressure into consideration. The calculation is based on a fully tightened thread (TL = thread length)
2) DIN ISO 228 BSPP

Connection thread Metric female thread	Version		Thread length TL	Width across flats	
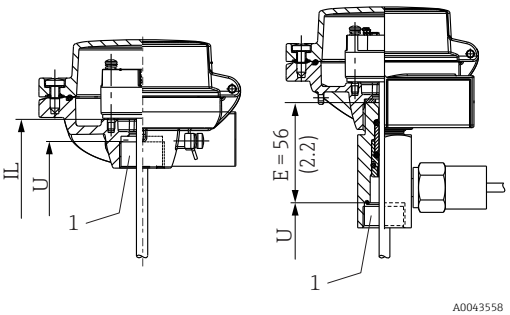 *1 Female thread*	M	M24x1.5 M20x1.5	14 mm (0.55 in) 20 mm (0.8 in)	27 mm (1.06 in)	The metric female thread is not designed as a process connection. This connection is only available for thermometers without a thermowell.

Connection thread Conical female thread	Version		Thread length TL	Width across flats	
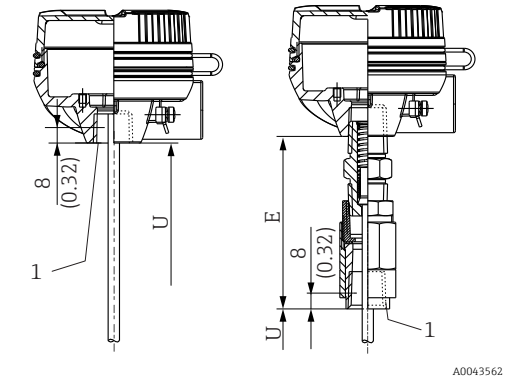 *1 Female thread*	NPT	NPT ½"	8 mm (0.32 in)	22 mm (0.87 in)	The conical female thread is not designed as a process connection. This connection is only available for thermometers without a thermowell.

Connection thread Cap nut [1]	Version	Thread length TL	Width across flats	
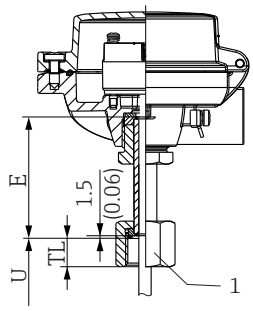 *1 Cap nut thread*	M20x1.5	15.5 mm (0.61 in)	27 mm (1.06 in)	The cap nuts are not designed as process connections. This connection is only available for thermometers without a thermowell.
	G½"	15.5 mm (0.61 in)	27 mm (1.06 in)	
	G¾"	19.5 mm (0.77 in)	32 mm (1.26 in)	

1) For selection without thermowell. Only available for installation in an existing thermowell

QuickNeck (top half) [1]	
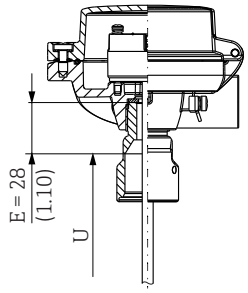	The QuickNeck (top half) is used for connecting to a thermowell provided onsite with a QuickNeck (bottom part). This connection is only available for thermometers without a thermowell.

1) For installation in an existing thermowell

The 316L compression fittings can only be used once due to deformation. This applies to all the components of the compression fittings! A replacement compression fitting must be secured at another point (grooves in thermowell). PEEK compression fittings must never be used at a temperature that is lower than the temperature present when the compression fitting is secured. This is because the fitting would no longer be leak-tight as a result of heat contraction of the PEEK material.

For higher requirements: SWAGELOCK or similar fittings are urgently recommended.

Weld-in adapter

Type TK40	Version	Dimensions			Technical properties
	Cylindrical	Ødi	ØD	h	
Weld-in adapter 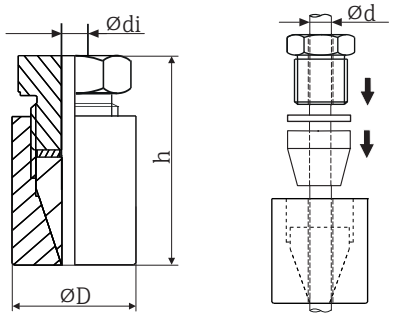	Ferrule material Elastosil Thread G½"	9.2 mm (0.36 in)	30 mm (1.18 in)	57 mm (2.24 in)	$P_{max.}$ = 10 bar (145 psi), $T_{max.}$ = +200 °C (+392 °F) for ELASTOSIL ferrule, tightening torque = 5 Nm

Compression fitting

Type TK40	Version	Dimensions			Technical properties
		Ød_i	L	Width across flats	
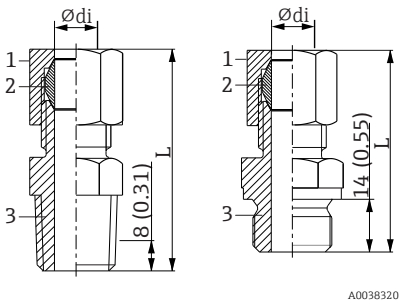 *1 Nut* *2 Ferrule* *3 Process connection*	NPT ½" , ferrule material 316L G ½" , ferrule material 316L	9 mm (0.35 in), minimum torque = 70 Nm 11 mm (0.43 in), minimum torque = 70 Nm 12 mm (0.47 in), minimum torque = 90 Nm 14 mm (0.55 in), minimum torque = 110 Nm	G½": 56 mm (2.2 in) ½" NPT: 60 mm (2.36 in)	G½": 27 mm (1.06 in) ½" NPT: 24 mm (0.95 in)	▪ $P_{max.}$ = 40 bar (104 psi) at T = +200 °C (+392 °F) for 316L ▪ $P_{max.}$ = 25 bar (77 psi) at T = +400 °C (+752 °F) for 316L
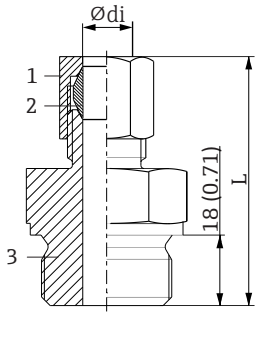 *1 Nut* *2 Ferrule* *3 Process connection*	G 1", ferrule material 316L	12 mm (0.47 in), minimum torque = 90 Nm 14 mm (0.55 in), minimum torque = 110 Nm	64 mm (2.52 in)	41 mm (1.61 in)	▪ $P_{max.}$ = 40 bar (104 psi) at T = +200 °C (+392 °F) for 316L ▪ $P_{max.}$ = 25 bar (77 psi) at T = +400 °C (+752 °F) for 316L

Flanges

The flanges are supplied in stainless steel AISI 316L with material number 1.4404 or 1.4435. With regard to their stability-temperature property, the materials 1.4404 and 1.4435 are grouped together under 13E0 in DIN EN 1092-1 Tab.18 and under 023b in JIS B2220:2004 Tab. 5. The ASME flanges are grouped together under Tab. 2-2.2 in ASME B16.5-2013. Inches are converted into metric units (in - mm) using the factor 2.54. In the ASME standard, the metric data is rounded to 0 or 5.

Versions
- DIN flanges: German Standards Institute DIN 2527
- EN flanges: European standard DIN EN 1092-1:2002-06 and 2007
- ASME flanges: American Society of Mechanical Engineers ASME B16.5-2013
- JIS flanges: Japanese Industrial Standard B2220:2004

Geometry of sealing surfaces

Flanges	Sealing surface	DIN 2526 [1]		DIN EN 1092-1		
		Shape	Rz (µm)	Shape	Rz (µm)	Ra (µm)
without raised face		A B	- 40 to 160	A [2]	12.5 to 50	3.2 to 12.5
with raised face	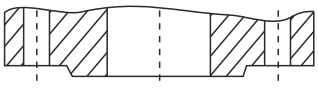	C D E	40 to 160 40 16	B1 [3] B2	12.5 to 50 3.2 to 12.5	3.2 to 12.5 0.8 to 3.2

Flanges	Sealing surface	DIN 2526 [1]		DIN EN 1092-1		
		Shape	Rz (µm)	Shape	Rz (µm)	Ra (µm)
Tongue	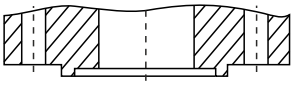 A0043517	F	-	C	3.2 to 12.5	0.8 to 3.2
Groove	 A0043518	N		D		
Projection	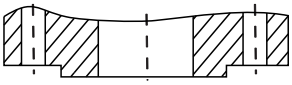 A0043519	V 13	-	E	12.5 to 50	3.2 to 12.5
Recess	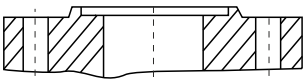 A0043520	R 13		F		
Projection	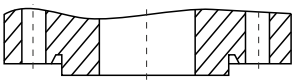 A0043521	V 14	for O-rings	H	3.2 to 12.5	3.2 to 12.5
Recess	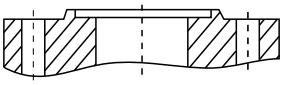 A0043522	R 14		G		

1) Contained in DIN 2527
2) Typically PN2.5 to PN40
3) Typically from PN63

Flanges according to the old DIN standard are compatible with the new DIN EN 1092-1 standard.
Change in pressure ratings: Old DIN standards PN64 → DIN EN 1092-1 PN63.

Height of raised face [1]

Standard	Flanges	Height of raised face f	Tolerance
DIN EN 1092-1:2002-06	all types	2 (0.08)	0 −1 (−0.04)
DIN EN 1092-1:2007	≤ DN 32		
	> DN 32 to DN 250	3 (0.12)	0 −2 (−0.08)
	> DN 250 to DN 500	4 (0.16)	0 −3 (−0.12)
	> DN 500	5 (0.19)	0 −4 (−0.16)
ASME B16.5 - 2013	≤ Class 300	1.6 (0.06)	±0.75 (±0.03)
	≥ Class 600	6.4 (0.25)	0.5 (0.02)
JIS B2220:2004	< DN 20	1.5 (0.06) 0	-
	> DN 20 to DN 50	2 (0.08) 0	
	> DN 50	3 (0.12) 0	

1) Dimensions in mm (in)

EN flanges (DIN EN 1092-1)

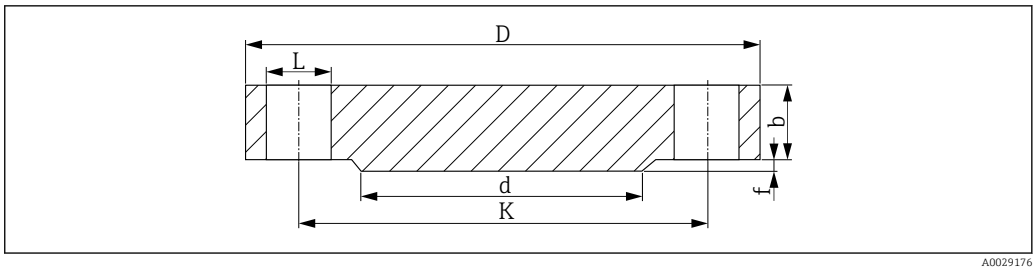

24 *Raised face B1*

L Bore diameter
d Diameter of raised face
K Diameter of pitch circle
D Flange diameter
b Total flange thickness
f Height of raised face (generally 2 mm (0.08 in)

PN16 [1)]

DN	D	b	K	d	L	approx. kg (lbs)
25	115 (4.53)	18 (0.71)	85 (3.35)	68 (2.68)	4xØ14 (0.55)	1.50 (3.31)
32	140 (5.51)	18 (0.71)	100 (3.94)	78 (3.07)	4xØ18 (0.71)	2.00 (4.41)
40	150 (5.91)	18 (0.71)	110 (4.33)	88 (3.46)	4xØ18 (0.71)	2.50 (5.51)
50	165 (6.5)	18 (0.71)	125 (4.92)	102 (4.02)	4xØ18 (0.71)	2.90 (6.39)
65	185 (7.28)	18 (0.71)	145 (5.71)	122 (4.80)	8xØ18 (0.71)	3.50 (7.72)
80	200 (7.87)	20 (0.79)	160 (6.30)	138 (5.43)	8xØ18 (0.71)	4.50 (9.92)
100	220 (8.66)	20 (0.79)	180 (7.09)	158 (6.22)	8xØ18 (0.71)	5.50 (12.13)
125	250 (9.84)	22 (0.87)	210 (8.27)	188 (7.40)	8xØ18 (0.71)	8.00 (17.64)
150	285 (11.2)	22 (0.87)	240 (9.45)	212 (8.35)	8xØ22 (0.87)	10.5 (23.15)
200	340 (13.4)	24 (0.94)	295 (11.6)	268 (10.6)	12xØ22 (0.87)	16.5 (36.38)
250	405 (15.9)	26 (1.02)	355 (14.0)	320 (12.6)	12xØ26 (1.02)	25.0 (55.13)
300	460 (18.1)	28 (1.10)	410 (16.1)	378 (14.9)	12xØ26 (1.02)	35.0 (77.18)

1) The dimensions in the following tables are in mm (in), unless otherwise specified.

PN25

DN	D	b	K	d	L	approx. kg (lbs)
25	115 (4.53)	18 (0.71)	85 (3.35)	68 (2.68)	4xØ14 (0.55)	1.50 (3.31)
32	140 (5.51)	18 (0.71)	100 (3.94)	78 (3.07)	4xØ18 (0.71)	2.00 (4.41)
40	150 (5.91)	18 (0.71)	110 (4.33)	88 (3.46)	4xØ18 (0.71)	2.50 (5.51)
50	165 (6.5)	20 (0.79)	125 (4.92)	102 (4.02)	4xØ18 (0.71)	3.00 (6.62)
65	185 (7.28)	22 (0.87)	145 (5.71)	122 (4.80)	8xØ18 (0.71)	4.50 (9.92)
80	200 (7.87)	24 (0.94)	160 (6.30)	138 (5.43)	8xØ18 (0.71)	5.50 (12.13)
100	235 (9.25)	24 (0.94)	190 (7.48)	162 (6.38)	8xØ22 (0.87)	7.50 (16.54)
125	270 (10.6)	26 (1.02)	220 (8.66)	188 (7.40)	8xØ26 (1.02)	11.0 (24.26)
150	300 (11.8)	28 (1.10)	250 (9.84)	218 (8.58)	8xØ26 (1.02)	14.5 (31.97)
200	360 (14.2)	30 (1.18)	310 (12.2)	278 (10.9)	12xØ26 (1.02)	22.5 (49.61)
250	425 (16.7)	32 (1.26)	370 (14.6)	335 (13.2)	12xØ30 (1.18)	33.5 (73.9)
300	485 (19.1)	34 (1.34)	430 (16.9)	395 (15.6)	16xØ30 (1.18)	46.5 (102.5)

PN40

DN	D	b	K	d	L	approx. kg (lbs)
15	95 (3.74)	16 (0.55)	65 (2.56)	45 (1.77)	4xØ14 (0.55)	0.81 (1.8)
25	115 (4.53)	18 (0.71)	85 (3.35)	68 (2.68)	4xØ14 (0.55)	1.50 (3.31)
32	140 (5.51)	18 (0.71)	100 (3.94)	78 (3.07)	4xØ18 (0.71)	2.00 (4.41)
40	150 (5.91)	18 (0.71)	110 (4.33)	88 (3.46)	4xØ18 (0.71)	2.50 (5.51)
50	165 (6.5)	20 (0.79)	125 (4.92)	102 (4.02)	4xØ18 (0.71)	3.00 (6.62)
65	185 (7.28)	22 (0.87)	145 (5.71)	122 (4.80)	8xØ18 (0.71)	4.50 (9.92)
80	200 (7.87)	24 (0.94)	160 (6.30)	138 (5.43)	8xØ18 (0.71)	5.50 (12.13)
100	235 (9.25)	24 (0.94)	190 (7.48)	162 (6.38)	8xØ22 (0.87)	7.50 (16.54)
125	270 (10.6)	26 (1.02)	220 (8.66)	188 (7.40)	8xØ26 (1.02)	11.0 (24.26)
150	300 (11.8)	28 (1.10)	250 (9.84)	218 (8.58)	8xØ26 (1.02)	14.5 (31.97)
200	375 (14.8)	36 (1.42)	320 (12.6)	285 (11.2)	12xØ30 (1.18)	29.0 (63.95)
250	450 (17.7)	38 (1.50)	385 (15.2)	345 (13.6)	12xØ33 (1.30)	44.5 (98.12)
300	515 (20.3)	42 (1.65)	450 (17.7)	410 (16.1)	16xØ33 (1.30)	64.0 (141.1)

PN63

DN	D	b	K	d	L	approx. kg (lbs)
25	140 (5.51)	24 (0.94)	100 (3.94)	68 (2.68)	4xØ18 (0.71)	2.50 (5.51)
32	155 (6.10)	24 (0.94)	110 (4.33)	78 (3.07)	4xØ22 (0.87)	3.50 (7.72)
40	170 (6.69)	26 (1.02)	125 (4.92)	88 (3.46)	4xØ22 (0.87)	4.50 (9.92)
50	180 (7.09)	26 (1.02)	135 (5.31)	102 (4.02)	4xØ22 (0.87)	5.00 (11.03)
65	205 (8.07)	26 (1.02)	160 (6.30)	122 (4.80)	8xØ22 (0.87)	6.00 (13.23)
80	215 (8.46)	28 (1.10)	170 (6.69)	138 (5.43)	8xØ22 (0.87)	7.50 (16.54)
100	250 (9.84)	30 (1.18)	200 (7.87)	162 (6.38)	8xØ26 (1.02)	10.5 (23.15)
125	295 (11.6)	34 (1.34)	240 (9.45)	188 (7.40)	8xØ30 (1.18)	16.5 (36.38)
150	345 (13.6)	36 (1.42)	280 (11.0)	218 (8.58)	8xØ33 (1.30)	24.5 (54.02)
200	415 (16.3)	42 (1.65)	345 (13.6)	285 (11.2)	12xØ36 (1.42)	40.5 (89.3)
250	470 (18.5)	46 (1.81)	400 (15.7)	345 (13.6)	12xØ36 (1.42)	58.0 (127.9)
300	530 (20.9)	52 (2.05)	460 (18.1)	410 (16.1)	16xØ36 (1.42)	83.5 (184.1)

PN100

DN	D	b	K	d	L	approx. kg (lbs)
25	140 (5.51)	24 (0.94)	100 (3.94)	68 (2.68)	4xØ18 (0.71)	2.50 (5.51)
32	155 (6.10)	24 (0.94)	110 (4.33)	78 (3.07)	4xØ22 (0.87)	3.50 (7.72)
40	170 (6.69)	26 (1.02)	125 (4.92)	88 (3.46)	4xØ22 (0.87)	4.50 (9.92)
50	195 (7.68)	28 (1.10)	145 (5.71)	102 (4.02)	4xØ26 (1.02)	6.00 (13.23)
65	220 (8.66)	30 (1.18)	170 (6.69)	122 (4.80)	8xØ26 (1.02)	8.00 (17.64)
80	230 (9.06)	32 (1.26)	180 (7.09)	138 (5.43)	8xØ26 (1.02)	9.50 (20.95)
100	265 (10.4)	36 (1.42)	210 (8.27)	162 (6.38)	8xØ30 (1.18)	14.0 (30.87)
125	315 (12.4)	40 (1.57)	250 (9.84)	188 (7.40)	8xØ33 (1.30)	22.5 (49.61)
150	355 (14.0)	44 (1.73)	290 (11.4)	218 (8.58)	12xØ33 (1.30)	30.5 (67.25)
200	430 (16.9)	52 (2.05)	360 (14.2)	285 (11.2)	12xØ36 (1.42)	54.5 (120.2)

DN	D	b	K	d	L	approx. kg (lbs)
250	505 (19.9)	60 (2.36)	430 (16.9)	345 (13.6)	12xØ39 (1.54)	87.5 (192.9)
300	585 (23.0)	68 (2.68)	500 (19.7)	410 (16.1)	16xØ42 (1.65)	131.5 (289.9)

ASME flanges (ASME B16.5-2013)

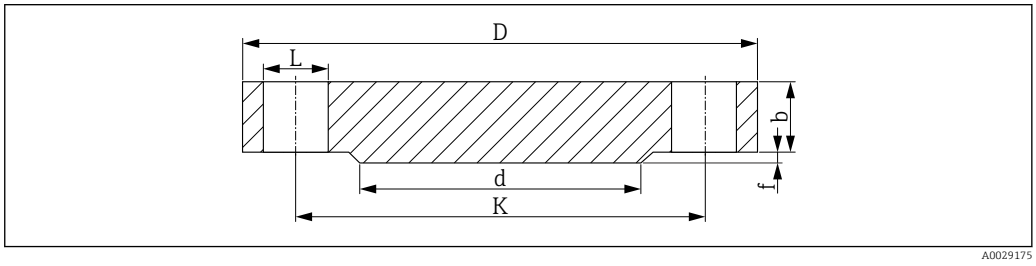

25 *Raised face RF*

L Bore diameter
d Diameter of raised face
K Diameter of pitch circle
D Flange diameter
b Total flange thickness
f Height of raised face, Class 150/300: 1.6 mm (0.06 in) or from Class 600: 6.4 mm (0.25 in)

Surface quality of sealing surface Ra ≤ 3.2 to 6.3 µm (126 to 248 µin).

Class 150 [1)]

DN	D	b	K	d	L	approx. kg (lbs)
1"	108.0 (4.25)	14.2 (0.56)	79.2 (3.12)	50.8 (2.00)	4xØ15.7 (0.62)	0.86 (1.9)
1¼"	117.3 (4.62)	15.7 (0.62)	88.9 (3.50)	63.5 (2.50)	4xØ15.7 (0.62)	1.17 (2.58)
1½"	127.0 (5.00)	17.5 (0.69)	98.6 (3.88)	73.2 (2.88)	4xØ15.7 (0.62)	1.53 (3.37)
2"	152.4 (6.00)	19.1 (0.75)	120.7 (4.75)	91.9 (3.62)	4xØ19.1 (0.75)	2.42 (5.34)
2½"	177.8 (7.00)	22.4 (0.88)	139.7 (5.50)	104.6 (4.12)	4xØ19.1 (0.75)	3.94 (8.69)
3"	190.5 (7.50)	23.9 (0.94)	152.4 (6.00)	127.0 (5.00)	4xØ19.1 (0.75)	4.93 (10.87)
3½"	215.9 (8.50)	23.9 (0.94)	177.8 (7.00)	139.7 (5.50)	8xØ19.1 (0.75)	6.17 (13.60)
4"	228.6 (9.00)	23.9 (0.94)	190.5 (7.50)	157.2 (6.19)	8xØ19.1 (0.75)	7.00 (15.44)
5"	254.0 (10.0)	23.9 (0.94)	215.9 (8.50)	185.7 (7.31)	8xØ22.4 (0.88)	8.63 (19.03)
6"	279.4 (11.0)	25.4 (1.00)	241.3 (9.50)	215.9 (8.50)	8xØ22.4 (0.88)	11.3 (24.92)
8"	342.9 (13.5)	28.4 (1.12)	298.5 (11.8)	269.7 (10.6)	8xØ22.4 (0.88)	19.6 (43.22)
10"	406.4 (16.0)	30.2 (1.19)	362.0 (14.3)	323.8 (12.7)	12xØ25.4 (1.00)	28.8 (63.50)

1) The dimensions in the following tables are in mm (in), unless otherwise specified.

Class 300

DN	D	b	K	d	L	approx. kg (lbs)
1"	124.0 (4.88)	17.5 (0.69)	88.9 (3.50)	50.8 (2.00)	4xØ19.1 (0.75)	1.39 (3.06)
1¼"	133.4 (5.25)	19.1 (0.75)	98.6 (3.88)	63.5 (2.50)	4xØ19.1 (0.75)	1.79 (3.95)
1½"	155.4 (6.12)	20.6 (0.81)	114.3 (4.50)	73.2 (2.88)	4xØ22.4 (0.88)	2.66 (5.87)
2"	165.1 (6.50)	22.4 (0.88)	127.0 (5.00)	91.9 (3.62)	8xØ19.1 (0.75)	3.18 (7.01)
2½"	190.5 (7.50)	25.4 (1.00)	149.4 (5.88)	104.6 (4.12)	8xØ22.4 (0.88)	4.85 (10.69)
3"	209.5 (8.25)	28.4 (1.12)	168.1 (6.62)	127.0 (5.00)	8xØ22.4 (0.88)	6.81 (15.02)

DN	D	b	K	d	L	approx. kg (lbs)
3½"	228.6 (9.00)	30.2 (1.19)	184.2 (7.25)	139.7 (5.50)	8xØ22.4 (0.88)	8.71 (19.21)
4"	254.0 (10.0)	31.8 (1.25)	200.2 (7.88)	157.2 (6.19)	8xØ22.4 (0.88)	11.5 (25.36)
5"	279.4 (11.0)	35.1 (1.38)	235.0 (9.25)	185.7 (7.31)	8xØ22.4 (0.88)	15.6 (34.4)
6"	317.5 (12.5)	36.6 (1.44)	269.7 (10.6)	215.9 (8.50)	12xØ22.4 (0.88)	20.9 (46.08)
8"	381.0 (15.0)	41.1 (1.62)	330.2 (13.0)	269.7 (10.6)	12xØ25.4 (1.00)	34.3 (75.63)
10"	444.5 (17.5)	47.8 (1.88)	387.4 (15.3)	323.8 (12.7)	16xØ28.4 (1.12)	53.3 (117.5)

Class 600

DN	D	b	K	d	L	approx. kg (lbs)
1"	124.0 (4.88)	17.5 (0.69)	88.9 (3.50)	50.8 (2.00)	4xØ19.1 (0.75)	1.60 (3.53)
1¼"	133.4 (5.25)	20.6 (0.81)	98.6 (3.88)	63.5 (2.50)	4xØ19.1 (0.75)	2.23 (4.92)
1½"	155.4 (6.12)	22.4 (0.88)	114.3 (4.50)	73.2 (2.88)	4xØ22.4 (0.88)	3.25 (7.17)
2"	165.1 (6.50)	25.4 (1.00)	127.0 (5.00)	91.9 (3.62)	8xØ19.1 (0.75)	4.15 (9.15)
2½"	190.5 (7.50)	28.4 (1.12)	149.4 (5.88)	104.6 (4.12)	8xØ22.4 (0.88)	6.13 (13.52)
3"	209.5 (8.25)	31.8 (1.25)	168.1 (6.62)	127.0 (5.00)	8xØ22.4 (0.88)	8.44 (18.61)
3½"	228.6 (9.00)	35.1 (1.38)	184.2 (7.25)	139.7 (5.50)	8xØ25.4 (1.00)	11.0 (24.26)
4"	273.1 (10.8)	38.1 (1.50)	215.9 (8.50)	157.2 (6.19)	8xØ25.4 (1.00)	17.3 (38.15)
5"	330.2 (13.0)	44.5 (1.75)	266.7 (10.5)	185.7 (7.31)	8xØ28.4 (1.12)	29.4 (64.83)
6"	355.6 (14.0)	47.8 (1.88)	292.1 (11.5)	215.9 (8.50)	12xØ28.4 (1.12)	36.1 (79.6)
8"	419.1 (16.5)	55.6 (2.19)	349.3 (13.8)	269.7 (10.6)	12xØ31.8 (1.25)	58.9 (129.9)
10"	508.0 (20.0)	63.5 (2.50)	431.8 (17.0)	323.8 (12.7)	16xØ35.1 (1.38)	97.5 (214.9)

Class 900

DN	D	b	K	d	L	approx. kg (lbs)
1"	149.4 (5.88)	28.4 (1.12)	101.6 (4.0)	50.8 (2.00)	4xØ25.4 (1.00)	3.57 (7.87)
1¼"	158.8 (6.25)	28.4 (1.12)	111.3 (4.38)	63.5 (2.50)	4xØ25.4 (1.00)	4.14 (9.13)
1½"	177.8 (7.0)	31.8 (1.25)	124.0 (4.88)	73.2 (2.88)	4xØ28.4 (1.12)	5.75 (12.68)
2"	215.9 (8.50)	38.1 (1.50)	165.1 (6.50)	91.9 (3.62)	8xØ25.4 (1.00)	10.1 (22.27)
2½"	244.4 (9.62)	41.1 (1.62)	190.5 (7.50)	104.6 (4.12)	8xØ28.4 (1.12)	14.0 (30.87)
3"	241.3 (9.50)	38.1 (1.50)	190.5 (7.50)	127.0 (5.00)	8xØ25.4 (1.00)	13.1 (28.89)
4"	292.1 (11.50)	44.5 (1.75)	235.0 (9.25)	157.2 (6.19)	8xØ31.8 (1.25)	26.9 (59.31)
5"	349.3 (13.8)	50.8 (2.0)	279.4 (11.0)	185.7 (7.31)	8xØ35.1 (1.38)	36.5 (80.48)
6"	381.0 (15.0)	55.6 (2.19)	317.5 (12.5)	215.9 (8.50)	12xØ31.8 (1.25)	47.4 (104.5)
8"	469.9 (18.5)	63.5 (2.50)	393.7 (15.5)	269.7 (10.6)	12xØ38.1 (1.50)	82.5 (181.9)
10"	546.1 (21.50)	69.9 (2.75)	469.0 (18.5)	323.8 (12.7)	16xØ38.1 (1.50)	122 (269.0)

Class 1500

DN	D	b	K	d	L	approx. kg (lbs)
1"	149.4 (5.88)	28.4 (1.12)	101.6 (4.0)	50.8 (2.00)	4xØ25.4 (1.00)	3.57 (7.87)
1¼"	158.8 (6.25)	28.4 (1.12)	111.3 (4.38)	63.5 (2.50)	4xØ25.4 (1.00)	4.14 (9.13)
1½"	177.8 (7.0)	31.8 (1.25)	124.0 (4.88)	73.2 (2.88)	4xØ28.4 (1.12)	5.75 (12.68)
2"	215.9 (8.50)	38.1 (1.50)	165.1 (6.50)	91.9 (3.62)	8xØ25.4 (1.00)	10.1 (22.27)

DN	D	b	K	d	L	approx. kg (lbs)
2½"	244.4 (9.62)	41.1 (1.62)	190.5 (7.50)	104.6 (4.12)	8xØ28.4 (1.12)	14.0 (30.87)
3"	266.7 (10.5)	47.8 (1.88)	203.2 (8.00)	127.0 (5.00)	8xØ31.8 (1.25)	19.1 (42.12)
4"	311.2 (12.3)	53.8 (2.12)	241.3 (9.50)	157.2 (6.19)	8xØ35.1 (1.38)	29.9 (65.93)
5"	374.7 (14.8)	73.2 (2.88)	292.1 (11.5)	185.7 (7.31)	8xØ41.1 (1.62)	58.4 (128.8)
6"	393.7 (15.50)	82.6 (3.25)	317.5 (12.5)	215.9 (8.50)	12xØ38.1 (1.50)	71.8 (158.3)
8"	482.6 (19.0)	91.9 (3.62)	393.7 (15.5)	269.7 (10.6)	12xØ44.5 (1.75)	122 (269.0)
10"	584.2 (23.0)	108.0 (4.25)	482.6 (19.0)	323.8 (12.7)	12xØ50.8 (2.00)	210 (463.0)

Thermowell material, nickel-based, with flange
If the thermowell materials Alloy600 and Alloy C276 are combined with a flange process connection, only the raised face and not the complete flange is made of the alloy for cost reasons. This is welded onto a flange with the parent material 316L. Identified in the order code by the material designation Alloy600 > 316L or Alloy C276 > 316L.

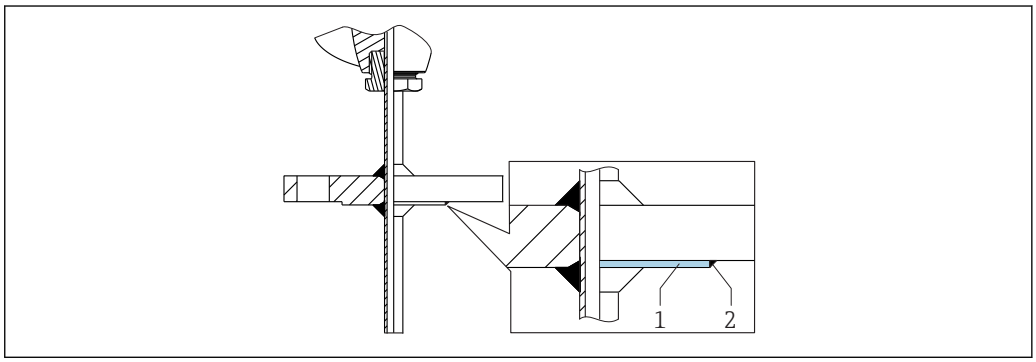

1 Raised face
2 Weld

Tip shape

The thermal response time, the reduction of the flow cross-section and the mechanical load that occurs in the process are the criteria that matter when selecting the shape of the tip. Advantages of using reduced or tapered thermometer tips:
- A smaller tip shape has less impact on the flow characteristics of the pipe carrying the medium.
- The flow characteristics are optimized, thereby increasing the stability of the thermowell.
- Endress+Hauser offers users a range of thermowell tips to meet every requirement:
  - Reduced tip with Φ5.3 mm (0.21 in): walls of lower thickness significantly reduce the response times of the overall measuring point.
  - Tapered tip with Φ6.6 mm (0.26 in) and reduced tip with Φ9 mm (0.35 in): walls of greater thickness are particularly well suited to applications with a higher degree of mechanical load or wear (e.g. pitting, abrasion, etc.).

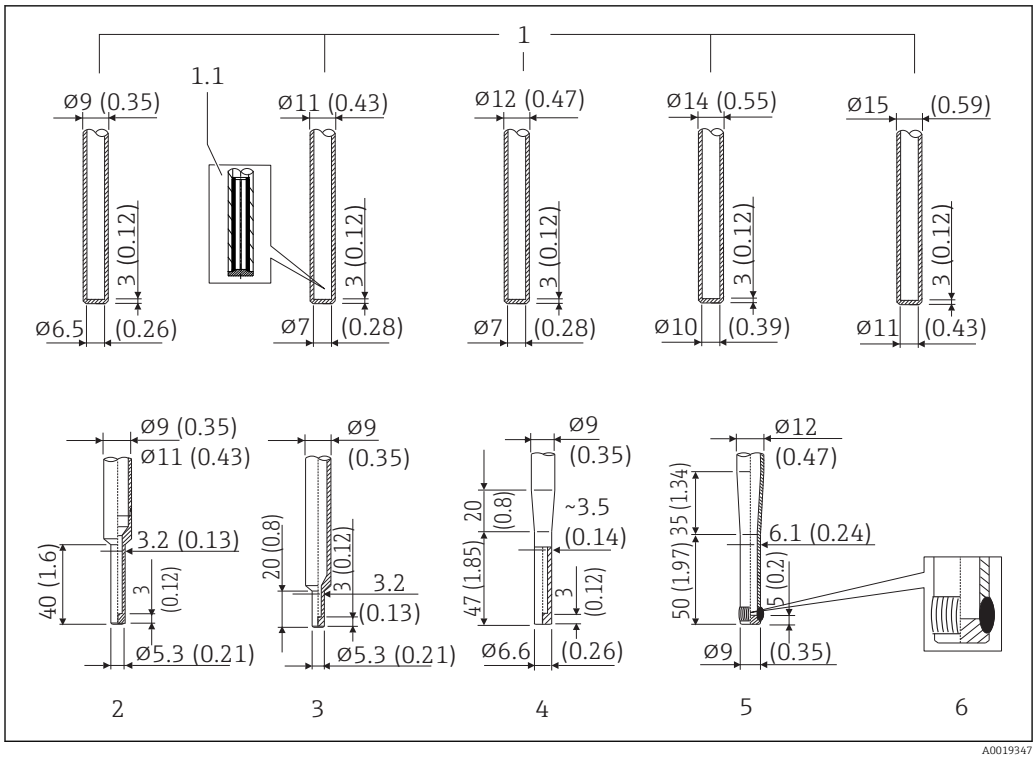

26 *Available thermowell tips (reduced, straight or tapered). Maximum surface roughness Ra ≤ 0.76 µm (30 µin). Bottom thickness = 3 mm (0.12 in)for straight version, except bottom thickness for schedule (SCH) straight versions = 4 mm (0.16 in)*

Item No.	Tip shape	Insert diameter
1	Straight	6 mm (0.24 in)
1.1	Tip assembly detail: fast response time design is available as an option for Φ11 mm (0.43 in) and Φ 12 mm (0.47 in). The gap between the insert and thermowell is filled with a stable heat transfer material.	
2	Reduced, U ≥ 70 mm (2.76 in)	3 mm (0.12 in)
3	Reduced, U ≥ 50 mm (1.97 in) [1]	3 mm (0.12 in)
4	Tapered, U ≥ 90 mm (3.54 in) [1]	3 mm (0.12 in)
5	Tapered DIN43772-3G, U ≥ 115 mm (4.53 in) [1] [2]	6 mm (0.24 in)
6	Welded tip, weld quality according to EN ISO 5817 - quality class B	

1) Not with the following materials: Alloy C276, Alloy600, 321, 316 and 446
2) Tip assembly detail: fast response time design is available as an option. The gap between the insert and thermowell is filled with a stable heat transfer material.

It is possible to check the mechanical loading capacity as a function of the installation and process conditions online in the TW Sizing Module for thermowells in the Endress+Hauser Applicator software. See "Accessories" section.

Inserts

Depending on the application, iTHERM TS111 or TS211 inserts with different RTD and TC sensors are available for the thermometer.

Sensor	Standard thin-film	iTHERM StrongSens	iTHERM QuickSens [1]	Wire wound	
Sensor design; connection method	1x Pt100, 3- or 4-wire, mineral insulated	1x Pt100, 3- or 4-wire, mineral insulated	1x Pt100, 3- or 4-wire ▪ Ø6 mm (¼ in), mineral insulated ▪ Ø3 mm (⅛ in), Teflon insulated	1x Pt100, 3- or 4-wire, mineral insulated	2x Pt100, 3-wire, mineral insulated
Vibration resistance of the insert tip	> 3g	Enhanced vibration resistance > 60g	▪ Ø3 mm (⅛ in) > 3g ▪ Ø6 mm (¼ in) > 60g	> 3g	
Measuring range	−50 to +400 °C (−58 to +752 °F)	−50 to +500 °C (−58 to +932 °F)	−50 to +200 °C (−58 to +392 °F)	−200 to +600 °C (−328 to +1 112 °F)	
Diameter	3 mm (⅛ in), 6 mm (¼ in)	6 mm (¼ in)	3 mm (⅛ in), 6 mm (¼ in)		

1) Recommended for immersion lengths U < 70 mm (2.76 in)

TC thermocouples	Type K	Type J	Type N
Sensor design	Mineral insulated, Alloy600 sheathed cable	Mineral insulated, stainless steel sheathed cable	Mineral insulated, Alloy TD sheathed cable
Vibration resistance of the insert tip	> 3g		
Measuring range	−40 to 1 100 °C (−40 to 2 012 °F)	−40 to 750 °C (−40 to 1 382 °F)	−40 to 1 100 °C (−40 to 2 012 °F)
Connection type	Grounded or ungrounded		
Temperature-sensitive length	Insert length		
Diameter	3 mm (⅛ in), 6 mm (¼ in)		

The iTHERM inserts are available as a spare part. The insertion length (IL) depends on the immersion length of the thermowell (U), the length of the extension neck (E), the thickness of the base (B), the length of the lagging (L) and the variable length (X). The insertion length (IL) must be taken into consideration when replacing the unit. Formulas for calculating IL in the **Mechanical construction** section.→ 31

For more information on the deployed insert iTHERM TS111 and TS211 with enhanced vibration resistance and fast-response sensor, see the Technical Information (TI01014T and TI01411T).

Spare parts currently available for your product can be found online at: http://www.products.endress.com/spareparts_consumables. Choose the corresponding product root. Always quote the serial number of the device when ordering spare parts! The insertion length IL is automatically calculated using the serial number.

Surface roughness

Values for wetted surfaces:

Standard surface	$R_a \leq$ 0.76 µm (0.03 µin)

Terminal heads

All terminal heads have an internal shape and size in accordance with DIN EN 50446, flat face and a thermometer connection with a M24x1.5 or ½" NPT thread. All dimensions in mm (in). The sample cable glands in the diagrams correspond to M20x1.5 connections with non-Ex polyamide cable glands. Specifications without head transmitter installed. For ambient temperatures with head transmitter installed, see the "Environment" section.

As a special feature, Endress+Hauser offers terminal heads with optimized terminal accessibility for easy installation and maintenance.

IP 68 = 1.83 m (6 ft), 24 h, with cable gland without cable (with plug), type 6P as per NEMA250-2003

TA20AB	Specification
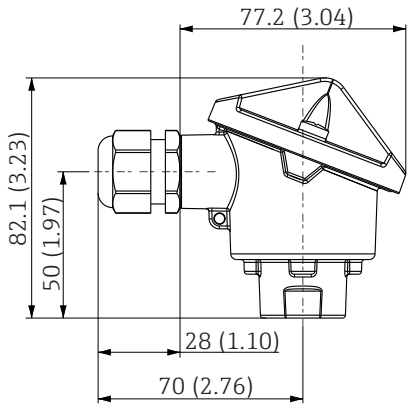	▪ Protection class: IP 66/68, NEMA 4x ▪ Temperature: −40 to +100 °C (−40 to +212 °F), polyamide cable gland ▪ Material: aluminum; polyester powder coated Seals: silicone ▪ Threaded cable entry: NPT ½" and M20x1.5 ▪ Color: blue, RAL 5012 ▪ Weight: approx. 300 g (10.6 oz)

TA20B	Specification
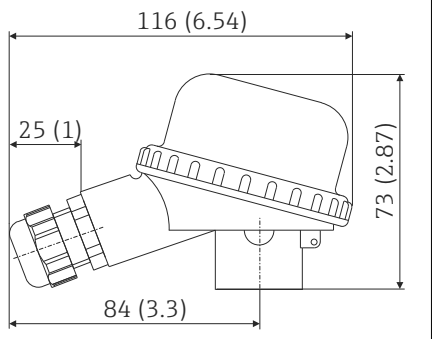	▪ Degree of protection: IP65 The following applies for option B2: IP55 (no sealing for cover installed) ▪ Max. temperature: −40 to +80 °C (−40 to +176 °F) without cable gland ▪ Material: polyamide (PA) ▪ Cable entry: M20x1.5 ▪ Head and cap color: black ▪ Weight: 80 g (2.82 oz) ▪ With 3-A® symbol

TA30A	Specification
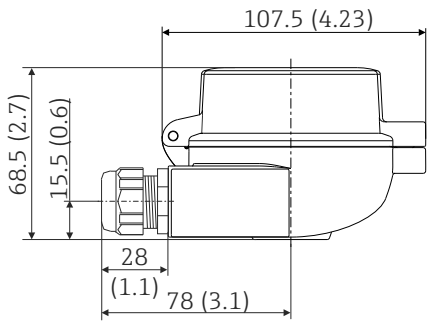	▪ Degree of protection: ▪ IP66/68 (NEMA Type 4x encl.) ▪ For ATEX: IP66/67 ▪ Temperature: −50 to +150 °C (−58 to +302 °F) without cable gland ▪ Material: aluminum, polyester powder coated Seals: silicone ▪ Cable entry thread: G ½", ½" NPT and M20x1.5; ▪ Protective fitting connection: M24x1.5 ▪ Head color: blue, RAL 5012 ▪ Cap color: gray, RAL 7035 ▪ Weight: 330 g (11.64 oz) ▪ Ground terminal, internal and external ▪ Available with sensors with 3-A® symbol

TA30A with display window in cover	Specification
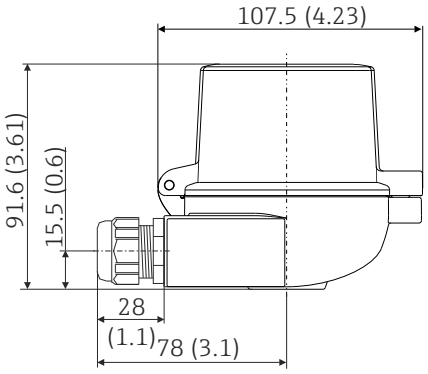	▪ Degree of protection: ▪ IP66/68 (NEMA Type 4x encl.) ▪ For ATEX: IP66/67 ▪ Temperature: −50 to +150 °C (−58 to +302 °F) without cable gland ▪ Material: aluminum, polyester powder coated Seals: silicone ▪ Cable entry thread: G ½", ½" NPT and M20x1.5 ▪ Protective fitting connection: M24x1.5 ▪ Head color: blue, RAL 5012 Cap color: gray, RAL 7035 ▪ Weight: 420 g (14.81 oz) ▪ Display window: single-pane safety glass according to DIN 8902 ▪ For TID10 display ▪ Ground terminal, internal and external ▪ Available with sensors with 3-A® symbol

TA30D	Specification
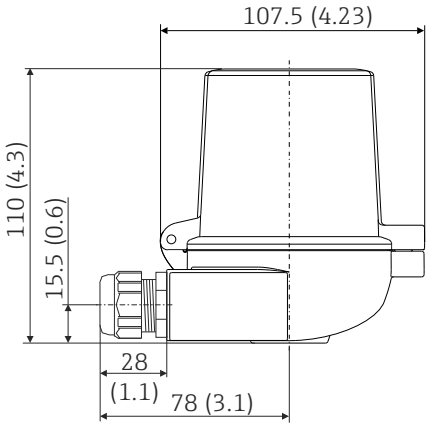	▪ Degree of protection: ▪ IP66/68 (NEMA Type 4x encl.) ▪ For ATEX: IP66/67 ▪ Temperature: −50 to +150 °C (−58 to +302 °F) without cable gland ▪ Material: aluminum, polyester powder coated Seals: silicone ▪ Cable entry thread: G ½", ½" NPT and M20x1.5 ▪ Protective fitting connection: M24x1.5 ▪ Two head transmitters can be mounted. In the standard configuration one transmitter is mounted in the terminal head cover and an additional terminal block is installed directly on the insert. ▪ Head color: blue, RAL 5012 ▪ Cap color: gray, RAL 7035 ▪ Weight: 390 g (13.75 oz) ▪ Ground terminal, internal and external ▪ Available with sensors with 3-A® symbol

TA30P	Specification
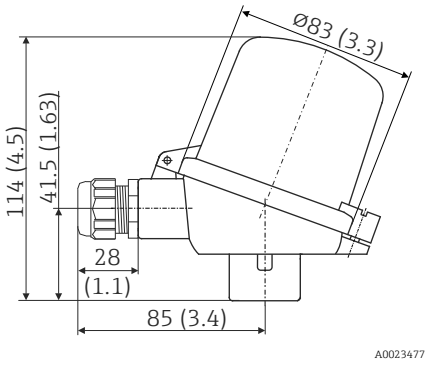	▪ Degree of protection: IP65 ▪ Max. temperature: −40 to +120 °C (−40 to +248 °F) ▪ Material: polyamide (PA12), antistatic Seals: silicone ▪ Threaded cable entry: M20x1.5 ▪ Protective fitting connection: M24x1.5 ▪ Two head transmitters can be mounted. In the standard configuration one transmitter is mounted in the terminal head cover and an additional terminal block is installed directly on the insert. ▪ Head and cap color: black ▪ Weight: 135 g (4.8 oz) ▪ Type of protection: intrinsic safety (G Ex ia) ▪ Ground terminal: only internal via auxiliary terminal ▪ Available with sensors with 3-A® symbol

TA30R (optionally with display window in cover)	Specification
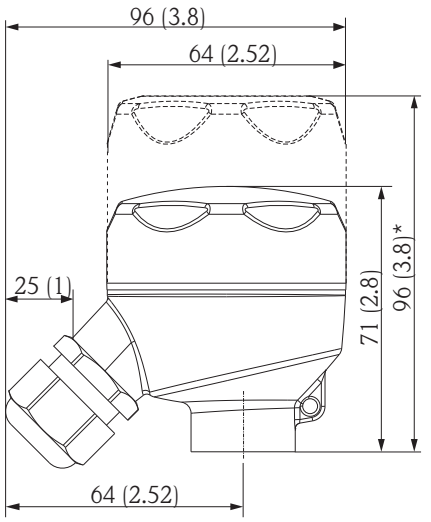 * Dimensions of version with display window in cover	▪ Degree of protection - standard version: IP69K (NEMA Type 4x encl.) Degree of protection - version with display window: IP66/68 (NEMA Type 4x encl.) ▪ Temperature: −50 to +130 °C (−58 to +266 °F) without cable gland ▪ Material: stainless steel 316L, abrasive-blasted or polished Seals: silicone, optional EPDM for applications free from paint-wetting impairment substances Display window: polycarbonate (PC) ▪ Cable entry thread ½" NPT and M20x1.5 ▪ Weight ▪ Standard version: 360 g (12.7 oz) ▪ Version with display window: 460 g (16.23 oz) ▪ Display window in cover optionally for head transmitter with display TID10 ▪ Protection armature connection: M24x1.5 or ½" NPT ▪ Ground terminal: internal as standard ▪ Available with 3-A marked sensors ▪ Not allowed for Class II and III applications

TA30R (high version for two transmitters)	Specification
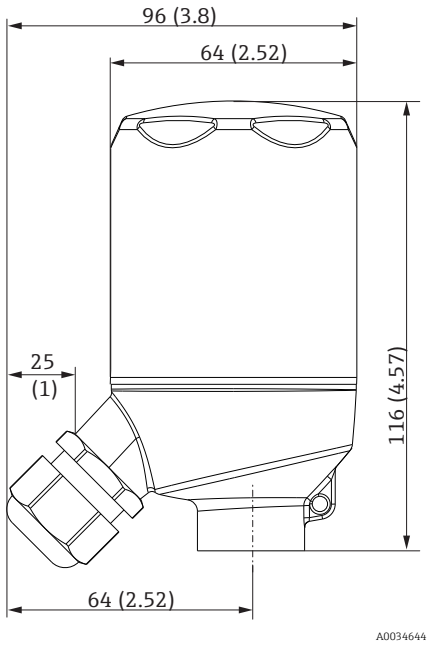	▪ Degree of protection: IP69K (NEMA Type 4x encl.) ▪ Temperature: −50 to +130 °C (−58 to +266 °F) without cable gland ▪ Material: stainless steel 316L, abrasive-blasted or polished Seals: EPDM ▪ Cable entry thread ½" NPT and M20x1.5 ▪ Weight: 460 g (16.23 oz) ▪ For two head transmitter ▪ Protection armature connection: M24x1.5 or ½" NPT ▪ Ground terminal: internal in standard version ▪ Not allowed for Class II and III applications ▪ Available with 3-A marked sensors

TA30H with display window in cover	Specification
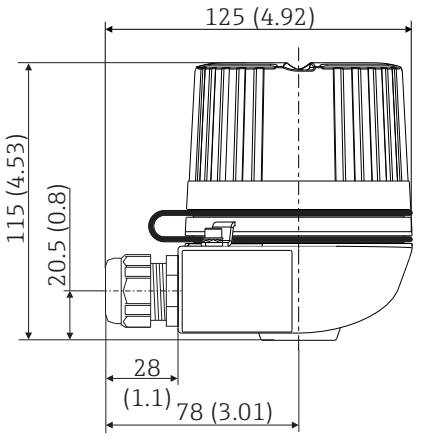 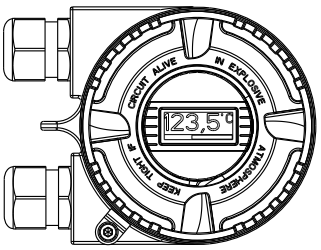 A0009831 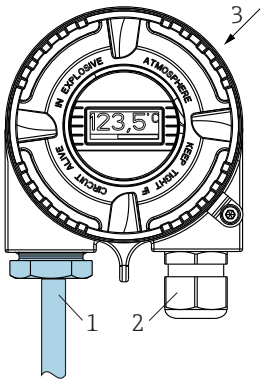 A0044217 *27 Terminal head used as field housing with display frontal mounted* *1 One cable entry is used as sensor input channel with an insert, TS211 for example* *2 Cable entry used for wiring* *3 The bottom entry into the housing is not available for the field housing version*	▪ Flameproof (XP) version, explosion-protected, captive screw cap, available with one or two cable entries ▪ Degree of protection: IP 66/68, NEMA Type 4x encl. Ex-version: IP 66/67 ▪ Temperature: −50 to +150 °C (−58 to +302 °F) for rubber seal without cable gland (observe max. permitted temperature of cable gland!) ▪ Material: ▪ Aluminum; polyester powder coated ▪ Stainless steel 316L without coating ▪ Klüber Syntheso Glep 1 dry-film lubricant ▪ Display window: single-pane safety glass according to DIN 8902 ▪ Thread: ½" NPT, ¾" NPT, M20x1.5, G½" ▪ Extension neck/thermowell connection: M20x1.5 or ½" NPT ▪ Color of aluminum head: blue, RAL 5012 ▪ Color of aluminum cap: gray, RAL 7035 ▪ Weight: ▪ Aluminum approx. 860 g (30.33 oz) ▪ Stainless steel approx. 2 900 g (102.3 oz) ▪ Head transmitter optionally available with TID10 display If the housing cover is unscrewed: Before tightening, clean the thread in the cover and housing base and lubricate if necessary (Recommended lubricant: Klüber Syntheso Glep 1)

TA30H	Specification
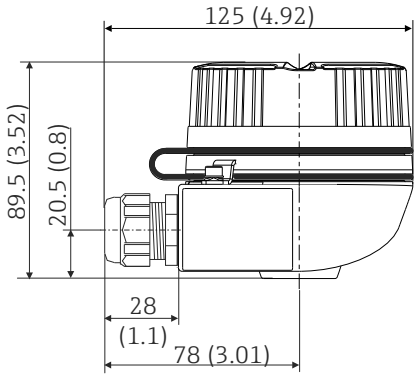	▪ Flameproof (XP) version, explosion-protected, captive screw cap, available with one or two cable entries ▪ Degree of protection: IP 66/68, NEMA Type 4x encl. Ex-version: IP 66/67 ▪ Temperature: −50 to +150 °C (−58 to +302 °F) for rubber seal without cable gland (observe max. permitted temperature of cable gland!) ▪ Material: ▪ Aluminum with polyester powder coating ▪ Stainless steel 316L without coating ▪ Klüber Syntheso Glep 1 dry-film lubricant ▪ Thread: ½" NPT, ¾" NPT, M20x1.5, G½" ▪ Extension neck/thermowell connection: M20x1.5 or ½" NPT ▪ Color of aluminum head: blue, RAL 5012 ▪ Color of aluminum cap: gray, RAL 7035 ▪ Weight: ▪ Aluminum: approx. 640 g (22.6 oz) ▪ Stainless steel: approx. 2 400 g (84.7 oz) If the housing cover is unscrewed: Before tightening, clean the thread in the cover and housing base and lubricate if necessary (Recommended lubricant: Klüber Syntheso Glep 1)

TA30EB	Specification
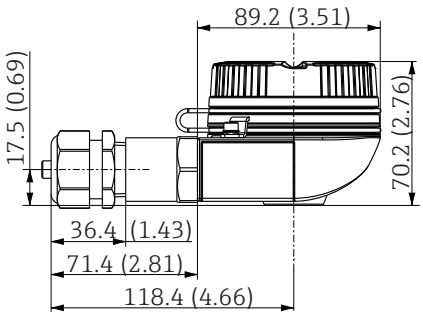	▪ Screw cap ▪ Degree of protection: IP 66/68, NEMA 4x ▪ Temperature: −50 to +150 °C (−58 to +302 °F) ▪ Material: aluminum; polyester powder coating; Klüber Syntheso Glep 1 dry-film lubricant ▪ Thread: M20x1.5 ▪ Extension neck/thermowell connection: NPT ½" ▪ Color of head: blue, RAL 5012 ▪ Color of cap: gray, RAL 7035 ▪ Weight: approx. 400 g (14.11 oz) ▪ Ground terminal: internal and external If the housing cover is unscrewed: Before tightening, clean the thread in the cover and housing base and lubricate if necessary (Recommended lubricant: Klüber Syntheso Glep 1)

TA30EB with display window in cover	Specification
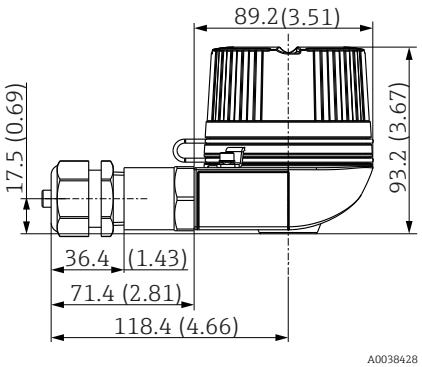	▪ Screw cap ▪ Degree of protection: IP 66/68, NEMA 4x Ex-version: IP 66/68 ▪ Temperature: −50 to +150 °C (−58 to +302 °F) for rubber seal without cable gland (observe max. permitted temperature of cable gland!) ▪ Material: aluminum; polyester powder coating; Klüber Syntheso Glep 1 dry-film lubricant ▪ Display window: single-pane safety glass according to DIN 8902 ▪ Thread: ½" NPT, ¾" NPT, M20x1.5, G½" ▪ Extension neck/thermowell connection: ½" NPT ▪ Color of head: blue, RAL 5012 ▪ Color of cap: gray, RAL 7035 ▪ Weight: approx. 400 g (14.11 oz) If the housing cover is unscrewed: Before tightening, clean the thread in the cover and housing base and lubricate if necessary (Recommended lubricant: Klüber Syntheso Glep 1)

Temperature field transmitter iTEMP TMT162	Specification
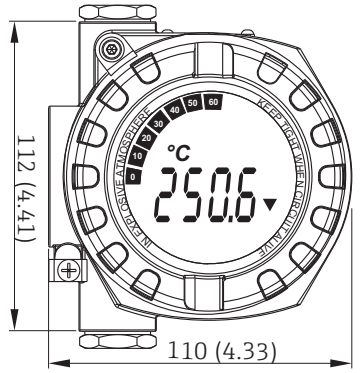 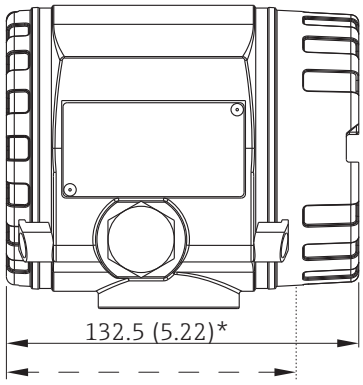 A0024608 * Dimensions without display = 112 mm (4.41 in)	▪ Separate electronics compartment and connection compartment ▪ Protection class: IP67, NEMA type 4x ▪ Material: Die-cast aluminum housing AlSi10Mg with powder coating on polyester base or stainless steel 316L ▪ Display rotatable in 90° increments ▪ Cable entry: 2x ½" NPT ▪ Brilliant backlit display with ease of visibility in bright sunshine or pitch darkness ▪ Gold plated terminals to avoid corrosion and additional measurement errors ▪ SIL certification as per IEC 61508:2010 (HART-protocol) ▪ Integrated surge arrester to prevent damage from overvoltage, optional

Temperature field transmitter iTEMP TMT142B	Specification
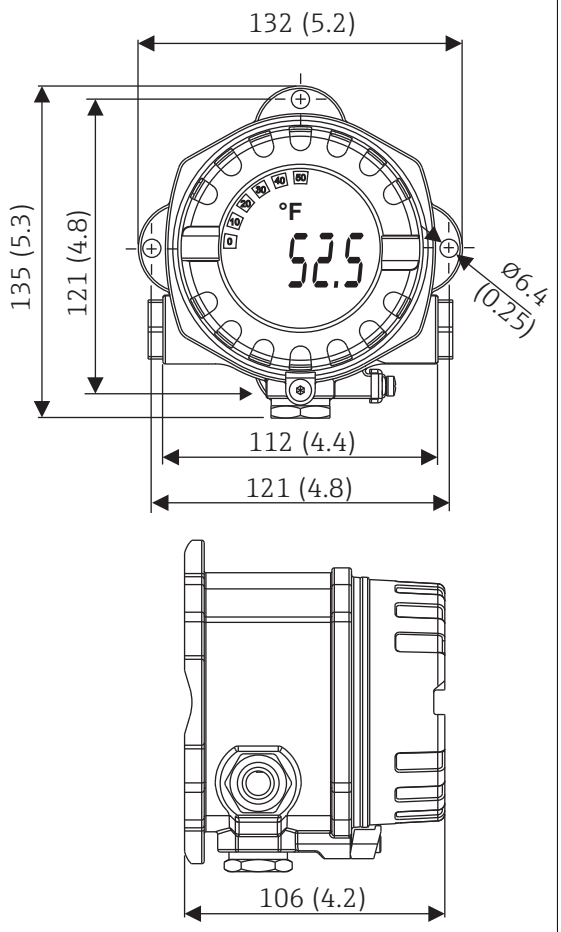	▪ Protection class: IP66/67, NEMA type 4x ▪ Material: Die-cast aluminum housing AlSi10Mg with powder coating on polyester base or stainless steel 316L ▪ Display rotatable in 90° increments ▪ Integrated Bluetooth® interface for wireless measured value display and parameter configuration, optional ▪ Bright backlit display with ease of visibility in bright sunshine or pitch darkness ▪ Gold plated terminals to avoid corrosion and additional measurement errors ▪ Integrated overvoltage protection for the prevention of damage from overvoltage, optional

Cable glands and connectors

Type	Suitable for cable entry	Degree of protection	Temperature range	Suitable cable diameter
Cable gland, polyamide blue (indication of Ex-i circuit)	½" NPT	IP68	−30 to +95 °C (−22 to +203 °F)	7 to 12 mm (0.27 to 0.47 in)
Cable gland, polyamide	½" NPT, ¾" NPT, M20x1.5 (optionally 2x cable entry)	IP68	−40 to +100 °C (−40 to +212 °F)	5 to 9 mm (0.19 to 0.35 in)
	½" NPT, M20x1.5 (optionally 2x cable entry)	IP69K	−20 to +95 °C (−4 to +203 °F)	
Cable gland for dust ignition-proof area, polyamide	½" NPT, M20x1.5	IP68	−20 to +95 °C (−4 to +203 °F)	
Cable gland for dust ignition-proof area, brass	M20x1.5	IP68 (NEMA Type 4x)	−20 to +130 °C (−4 to +266 °F)	

Type	Suitable for cable entry	Degree of protection	Temperature range	Suitable cable diameter
Fieldbus connector (M12x1 PA, 7/8" PA, FF)	½" NPT, M20x1.5	IP67, NEMA Type 6	−40 to +105 °C (−40 to +221 °F)	-
Fieldbus connector (M12, 8-pin)	M20x1.5	IP67	−30 to +90 °C (−22 to +194 °F)	-

For explosion proof thermometers no cable glands are assembled.

Extension neck

The extension neck is the part between the process connection and the terminal head. It can consist of two parts: a lagging that is permanently connected to the thermowell, and a removable extension neck. The term E is used to describe the length of the removable extension neck.

Different versions of the removable extension neck are possible.

Removable extension neck according DIN 43772
The removable extension neck according to DIN has a threaded connection on both sides. If the thermometer has a thermowell, the standard connection is a G½" thread [4]. If the thermometer does not have a thermowell, and is intended for installation in a separate thermowell, the thread for the thermowell connection can be selected *(feature 50: process/thermowell connection)*

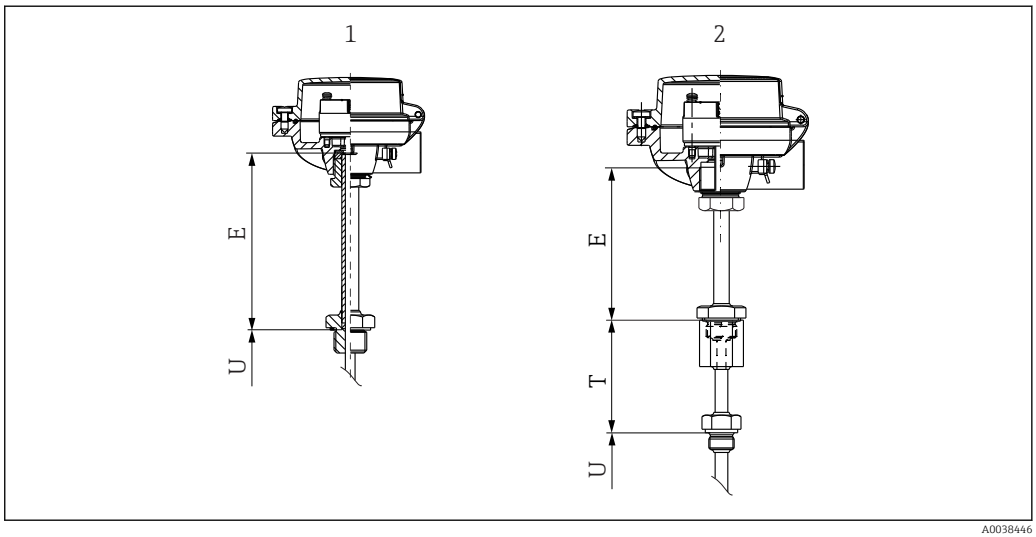

1 Removable extension neck - thermometer without thermowell
2 Removable extension neck - thermometer with thermowell

Removable extension neck as top half of QuickNeck
In a QuickNeck unit, the top part is the removable extension neck and the bottom part is the thermowell lagging. If the thermometer does not have a thermowell, select the QuickNeck option (top half) *(feature 50: process/thermowell connection, option G1)*. The length of the removable extension neck is predetermined by the chosen design here.

4) Except if an M20x1.5 thread is specifically selected

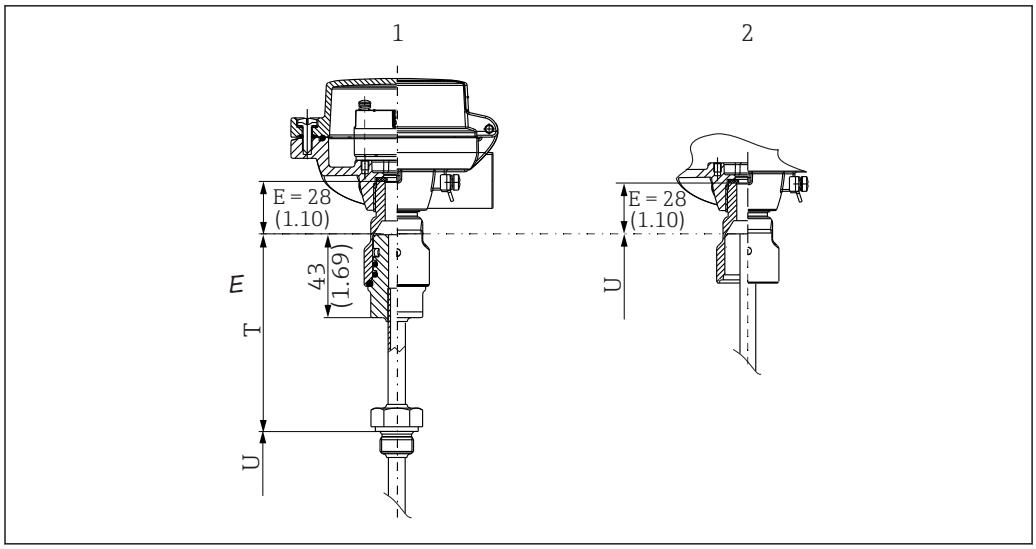

1 Continuous thermowell + iTHERM QuickNeck, separable
2 iTHERM QuickNeck - top half - for installation in an existing thermowell with iTHERM QuickNeck

Removable extension neck as 'second process seal'
The removable extension neck can be designed as a second process seal. The connection to the head is an M24x1.5 male thread and the connection to the thermowell is an M24x1.5 female thread. This makes it possible to retrofit with standard thermometers. The length of the removable extension neck is predetermined by the chosen design here.

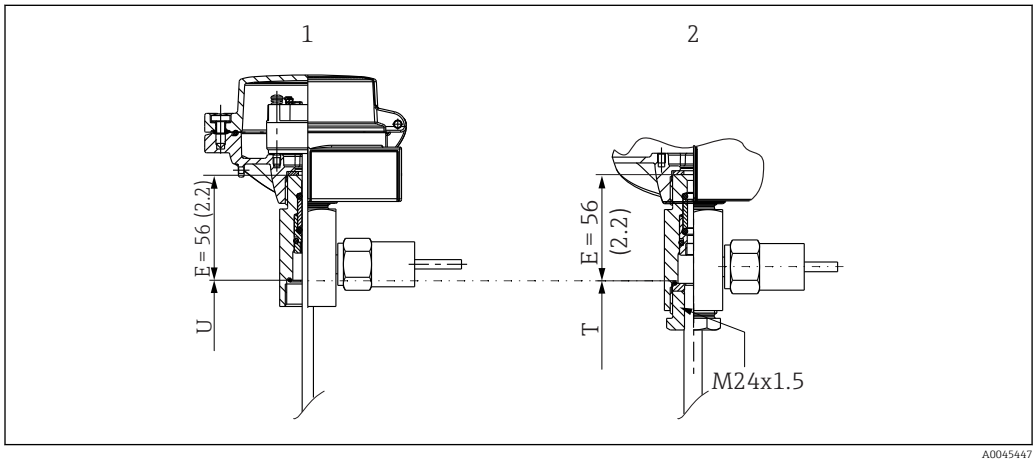

1 Extension neck with second process seal without a thermowell
2 Extension neck with second process seal with a thermowell

Removable extension neck as nipple connection
- The removable extension neck can be designed as a nipple connection. In this case, the connection is always an NPT ½" thread. The nipple directly on the terminal head is part of the TS211 insert in this case. The length of the nipple is not variable. It is 35 mm (1.38 in) as the standard version and 47 mm (1.85 in) as a lamination nipple version for Ex d applications.
- For the nipple-union connection, an NPT ½" female thread is used for the connection to the thermowell. The nipple directly on the terminal head is part of the TS211 insert in this case. The overall length is not variable. It is 93 mm (3.66 in) as the standard version and 105 mm (4.13 in) as a lamination nipple version for Ex d applications.
- In the case of the nipple-union-nipple connection, the nipple directly on the terminal head is part of the TS211 insert. The overall length is not variable. It is 142 mm (5.6 in) as the standard version and 154 mm (6.06 in) as the version for Ex d applications. In the case of this connection, the length of the second nipple can be configured if required.

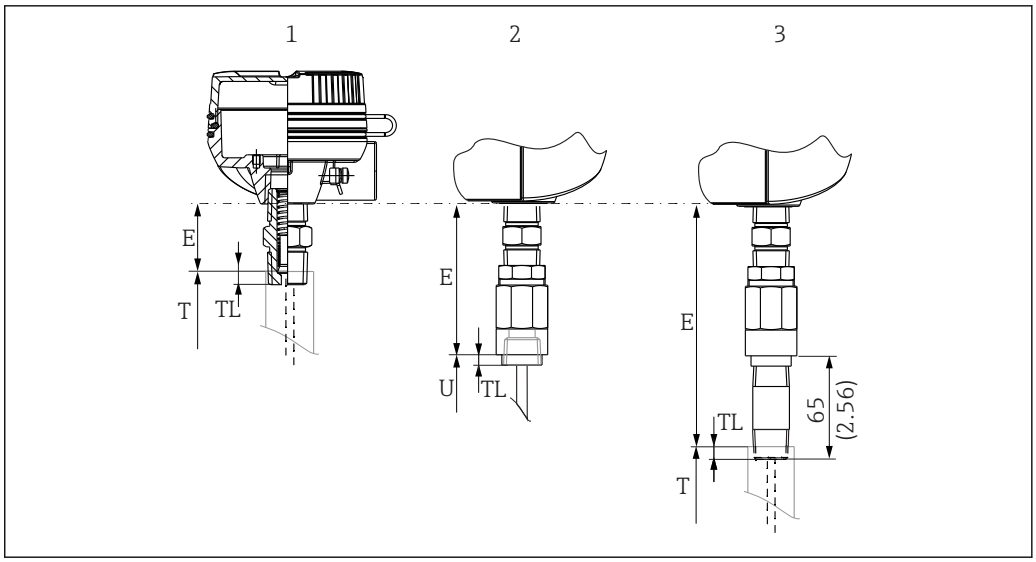

1 Extension neck type N (nipple) NPT ½"
2 Extension neck type NU (nipple-union) NPT ½" female thread
3 Extension neck type NUN (nipple-union-nipple) NPT ½", the length of the lower nipple can be configured

As illustrated in the following diagram, the length of the extension neck can influence the temperature in the terminal head. This temperature must remain within the limit values defined in the "Operating conditions" section.

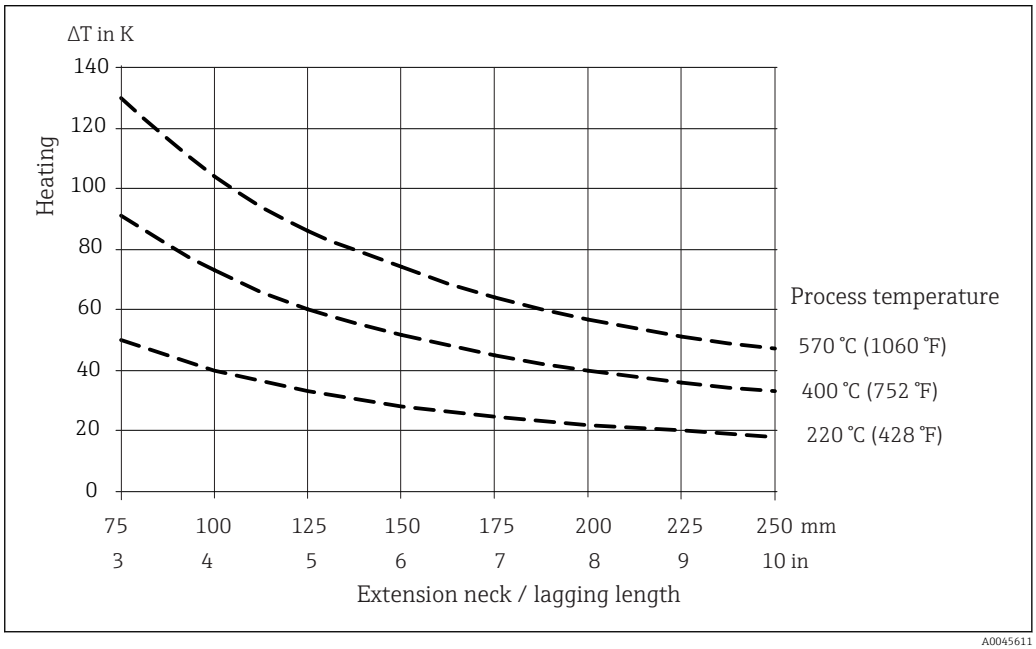

28 Heating of the terminal head as a function of the process temperature. Temperature in terminal head = ambient temperature 20 °C (68 °F)+ ΔT

The diagram can be used to calculate the transmitter temperature.

Example: At a process temperature of 220 °C (428 °F) and with a lagging length of 100 mm (3.94 in), the heat conduction is 40 K (72 °F). The transmitter temperature is therefore 40 K (72 °F) plus the ambient temperature, e.g. 25 °C (77 °F): 40 K (72 °F) + 25 °C (77 °F) = 65 °C (149 °F).

Result: The temperature of the transmitter is o.k., the length of the lagging is sufficient.

Extension neck with second process seal

A special version of the extension neck is available with a second process seal, which can be placed as an optional component between the thermowell and the terminal head. In the event of a thermowell failure, no process medium will enter the terminal head or the wiring circuit. The process medium is held in the thermowell. A pressure switch emits a signal if the pressure in the component with the second process seal increases in order to alert the maintenance personnel to a dangerous situation. Measurement can continue for a short transition period, depending on the pressure, temperature and process medium, until the thermowell is replaced.

Transmitter wiring scheme: An Endress+Hauser TMT82 temperature transmitter with two channels and HART® protocol is used. One channel converts the signals of the temperature sensor to a 4 to 20 mA signal. The second channel uses the sensor breakage detection function in the thermocouple configuration and transmits this failure information via the HART® protocol if the pressure switch is activated. Other configurations are possible on request.

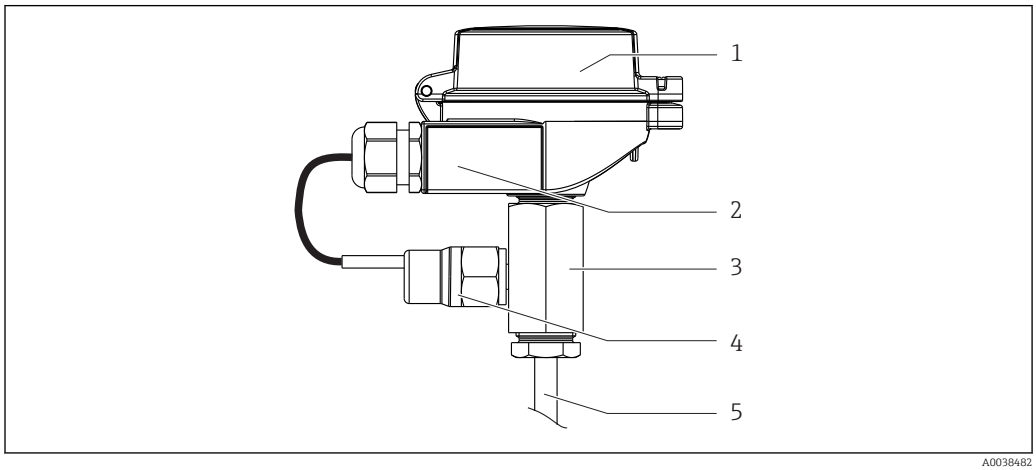

29 Extension neck with second process seal

1 *Terminal head with built-in temperature transmitter*
2 *Housing with dual cable entry. A suitable cable gland is installed for the cable entry of the pressure switch. The second cable entry is not assigned.*
3 *Second process seal*
4 *Installed pressure switch*
5 *Upper part of the thermowell*

Maximum pressure	200 bar (2 900 psi)
Switch point	3.5 bar (50.8 psi)±1 bar (±14.5 psi)
Ambient temperature range	−20 to +80 °C (−4 to +176 °F)
Process temperature range	Up to +400 °C (+752 °F), minimum required length of extension neck T = 100 mm (3.94 in)
Seal material	FKM

During the design phase, pay attention to the significantly lower pressure resistance of the thermowell and process connection as well as the resistance of the seal material to the process medium!

The primary thermowell, whose material can be selected from various stainless steels and nickel-based materials, represents the first process seal. The resistance of the thermowell material to the process conditions must be guaranteed. The extension neck represents the second process seal. The

process here is sealed off from the environment by means of seals made of FKM. The resistance of the seal material to the process conditions must be guaranteed.

Recommendation: Due to the aging of the internal seals, we recommend replacing the components of the second process seal every five years, even if no fault has occurred in the thermowell. In the event of a leak in the thermowell, the components of the second process seal must be replaced along with the thermowell. If, as a result of the leak in the first process seal, the pressure in the extension neck rises above the switching pressure of the pressure switch, the transmitter transmits a "sensor break" error message to the control system via HART® communication.

Certificates and approvals

Current certificates and approvals for the product are available at www.endress.com on the relevant product page:

1. Select the product using the filters and search field.
2. Open the product page.
3. Select **Downloads**.

Test on thermowell

Thermowell pressure tests are carried out in accordance with the specifications in DIN 43772. With regard to thermowells with tapered or reduced tips that do not comply with this standard, these are tested using the pressure of corresponding straight thermowells. Sensors for use in hazardous areas are also always subjected to a comparative pressure during the tests. Tests according to other specifications can be carried out on request. The liquid penetration test verifies that there are no cracks in the welded seams of the thermowell.

MID

Test certificate (only in SIL mode). In compliance with:
- WELMEC 8.8, "Guide on the General and Administrative Aspects of the Voluntary System of Modular Evaluation of Measuring Instruments."
- OIML R117-1 Edition 2007 (E) "Dynamic measuring systems for liquids other than water"
- EN 12405-1/A2 Edition 2010 "Gas meters - Conversion devices - Part 1: Volume conversion"
- OIML R140-1 Edition 2007 (E) "Measuring systems for gaseous fuel"

Ordering information

Detailed ordering information is available from your nearest sales organization www.addresses.endress.com or in the Product Configurator at www.endress.com:

1. Select the product using the filters and search field.
2. Open the product page.
3. Select **Configuration**.

Product Configurator - the tool for individual product configuration
- Up-to-the-minute configuration data
- Depending on the device: Direct input of measuring point-specific information such as measuring range or operating language
- Automatic verification of exclusion criteria
- Automatic creation of the order code and its breakdown in PDF or Excel output format
- Ability to order directly in the Endress+Hauser Online Shop

Accessories

Various accessories, which can be ordered with the device or subsequently from Endress+Hauser, are available for the device. Detailed information on the order code in question is available from your local Endress+Hauser sales center or on the product page of the Endress+Hauser website: www.endress.com.

Service-specific accessories

Accessories	Description
Applicator	Software for selecting and sizing Endress+Hauser measuring devices: ▪ Calculation of all the necessary data for identifying the optimum measuring device: e.g. pressure loss, accuracy or process connections. ▪ Graphic illustration of the calculation results Administration, documentation and access to all project-related data and parameters over the entire life cycle of a project. Applicator is available: Via the Internet: https://portal.endress.com/webapp/applicator

Accessories	Description
Configurator	Product Configurator - the tool for individual product configuration ▪ Up-to-the-minute configuration data ▪ Depending on the device: Direct input of measuring point-specific information such as measuring range or operating language ▪ Automatic verification of exclusion criteria ▪ Automatic creation of the order code and its breakdown in PDF or Excel output format ▪ Ability to order directly in the Endress+Hauser Online Shop The Configurator is available on the Endress+Hauser website at: www.endress.com -> Click "Corporate" -> Select your country -> Click "Products" -> Select the product using the filters and search field -> Open product page -> The "Configure" button to the right of the product image opens the Product Configurator.
DeviceCare SFE100	Configuration tool for devices via fieldbus protocols and Endress+Hauser service protocols. DeviceCare is the tool developed by Endress+Hauser for the configuration of Endress+Hauser devices. All smart devices in a plant can be configured via a point-to-point or point-to-bus connection. The user-friendly menus enable transparent and intuitive access to the field devices. For details, see Operating Instructions BA00027S
FieldCare SFE500	FDT-based plant asset management tool from Endress+Hauser. It can configure all smart field units in your system and helps you manage them. By using the status information, it is also a simple but effective way of checking their status and condition. For details, see Operating Instructions BA00027S and BA00065S

Supplementary documentation

The following types of documentation are available on the product pages and in the Download Area of the Endress+Hauser website (www.endress.com/downloads) (depending on the selected device version):

Document	Purpose and content of the document
Technical Information (TI)	**Planning aid for your device** The document contains all the technical data on the device and provides an overview of the accessories and other products that can be ordered for the device.
Brief Operating Instructions (KA)	**Guide that takes you quickly to the 1st measured value** The Brief Operating Instructions contain all the essential information from incoming acceptance to initial commissioning.
Operating Instructions (BA)	**Your reference document** The Operating Instructions contain all the information that is required in various phases of the life cycle of the device: from product identification, incoming acceptance and storage, to mounting, connection, operation and commissioning through to troubleshooting, maintenance and disposal.
Description of Device Parameters (GP)	**Reference for your parameters** The document provides a detailed explanation of each individual parameter. The description is aimed at those who work with the device over the entire life cycle and perform specific configurations.

Document	Purpose and content of the document
Safety Instructions (XA)	Depending on the approval, Safety Instructions (XA) are supplied with the device. The Safety Instructions are an integral part of the Operating Instructions. Information on the Safety Instructions (XA) that are relevant for the device is provided on the nameplate.
Supplementary device-dependent documentation (SD/FY)	Always comply strictly with the instructions in the relevant supplementary documentation. The supplementary documentation is an integral part of the device documentation.

71611068

www.addresses.endress.com

Endress+Hauser
People for Process Automation