Series TC15



AVENTICS™

AVENTICS Series TC15 Valve systems

EMERSON™

AVENTICS Series TC15 Valve systems

The AVENTICS Series TC15 valve system is the perfect choice for applications calling for lightweight valves with high flow rate in a small space. With valves operated either pneumatically or electrically, the valve system can be modularly expanded to up to 12 valves. Valves can be exchanged without dismantling the valve block.

- Qn = 1100 l/min ... 1500 l/min
- 2x3/2, 5/2, 5/3 Spool valves with polyamide housing
- Pneumatic connection G1/4, 1/4-18 NPTF
- Working pressure min./max. -0.9/10 bar
- Voltage 12 V DC, 24 V DC, 24 V AC, 110 V AC,230 V AC
- Electrical connection ISO form C, M8 3-pin; M8 4-pin
- Standard TC08 and TC15 manifolds will by default be delivered with a screw plug for P supply (port 1) in endplates assembly on side 14.



Product overview

Page

Electrically operated, form C
2x3/2-directional valve, Series TC15 5
Soft seal
5/2-directional valve, Series TC15 7
Soft seal
5/2-directional valve, Series TC15, basic valve 9
Soft seal
5/2-directional valve, Series TC15 10
Soft seal
5/2-directional valve, Series TC15, double, basic valve 12
Soft seal
5/3-directional valve, Series TC15 13
Soft seal
5/3-directional valve, Series TC15, basic valve 15
Soft seal

Electrically operated, form C, inch
2x3/2-directional valve, Series TC15 - inch 16
Soft seal
5/2-directional valve, Series TC15, inch 18
Soft seal
5/2-directional valve, Series TC15, double, inch 20
Soft seal
5/3-directional valve, Series TC15 - inch 22
Soft seal

Electrically operated, M8, 3-pin
2x3/2-directional valve, Series TC15 24
Soft seal
5/2-directional valve, Series TC15, double, with detend 26
Soft seal
5/2-directional valve, Series TC15 28
Soft seal
5/3-directional valve, Series TC15 31
Soft seal

Electrically operated, M8, 4-pin
2x3/2-directional valve, Series TC15 34
Soft seal
5/2-directional valve, Series TC15, double 36
Soft seal
5/2-directional valve, Series TC15, without detent 38
Soft seal
5/2-directional valve, Series TC15, with detent 40
Soft seal
5/3-directional valve, Series TC15 42
Soft seal

Pneumatically operated
2x3/2-directional valve, Series TC15 45
Soft seal

Product overview

Page

5/2-directional valve, Series TC15 46
Double Air Pilot - Soft seal
5/3-directional valve, Series TC15 47
Soft seal

Accessories overview TC15-VS

Valve plug connector, series CON-VP, 0° female insert 48
Z-diode - 24 V AC/DC
Valve plug connector with cable series CON-VP,, 180° female insert 51
Z-diode - 24 V AC/DC
Valve plug connector, series CON-VP, form C, 300 V DC / 250 V AC 54
Coil, Series CO1, Form C 57
Form C, coil kit - Plug
Coil, Series CO1, M8 59
M8, coil kit - Plug
Round plug connector, Series CON-RD 61
Socket - M8x1 - 3-pin - straight - open cable ends - 3-pin
Round plug connector, Series CON-RD 63
Socket - M8x1 - 3-pin - angled - open cable ends - 3-pin
Round plug connector, Series CON-RD 65
Socket - M8x1 - 3-pin - straight - Soldering
Round plug connector, Series CON-RD 66
Socket - M8x1 - 3-pin - angled - Soldering
Round plug connector, Series CON-RD, open cable ends, straight, 4-pin 67
Socket - M8x1 - 4-pin - straight - open cable ends - 4-pin
Round plug connector, Series CON-RD, Plug M8x1, 4-pin 69
Socket - M8x1 - 4-pin - angled - open cable ends - 4-pin
Silencers, series SI1, Sintered bronze 71
Mounting kit for DIN rails DIN 72
Mounting kit for DIN rails EN 60715, 35x15
Accessories, Series TC15 73

2x3/2-directional valve, Series TC15

Activation: Electrically
Control pressure min./max.: 10 bar
Duty cycle: 100 %
Type: Poppet valve
Ambient temperature min./max.: -10 °C ... 50 °C
Medium temperature min./max.: -10 °C ... 50 °C
Working pressure min./max.: -0.9 bar ... 10 bar



	Valve function	Switching principle	Compressed air connection output	Threaded bushing	Operational voltage	Pilot	Power consumption DC [W]	Part No.
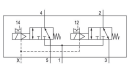	NC/NC	2x 3/2 NC/NC, with spring return	G 1/4	Brass, Die cast zinc	24 V DC	External	2	R422102197
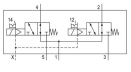	NO/NO	2x 3/2 NO/NO, with spring return	G 1/4	Brass, Die cast zinc	24 V DC	External	2	R422102201
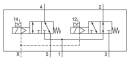	NC/NO	2x 3/2 NC/NO, with spring return	G 1/4	Brass, Die cast zinc	24 V DC	External	2	R422102205
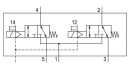	NC/NC	2x 3/2 NC/NC, with spring return	G 1/4	Brass, Die cast zinc	24 V DC	External	2	R422102209
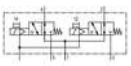	NO/NO	2x 3/2 NO/NO, with spring return	G 1/4	Brass, Die cast zinc	24 V DC	External	2	R422102213
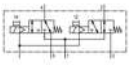	NC/NO	2x 3/2 NC/NO, with spring return	G 1/4	Brass, Die cast zinc	24 V DC	External	2	R422102217

Voltage tolerance DC	Manual override	Nominal flow Qn 1 to 2 [l/min]	Part No.
-10 % / +10 %	with detent	1100	R422102197
-10 % / +10 %	with detent	1100	R422102201
-10 % / +10 %	with detent	1100	R422102205
-10 % / +10 %	without detent	1100	R422102209
-10 % / +10 %	without detent	1100	R422102213
-10 % / +10 %	without detent	1100	R422102217

Dimensions

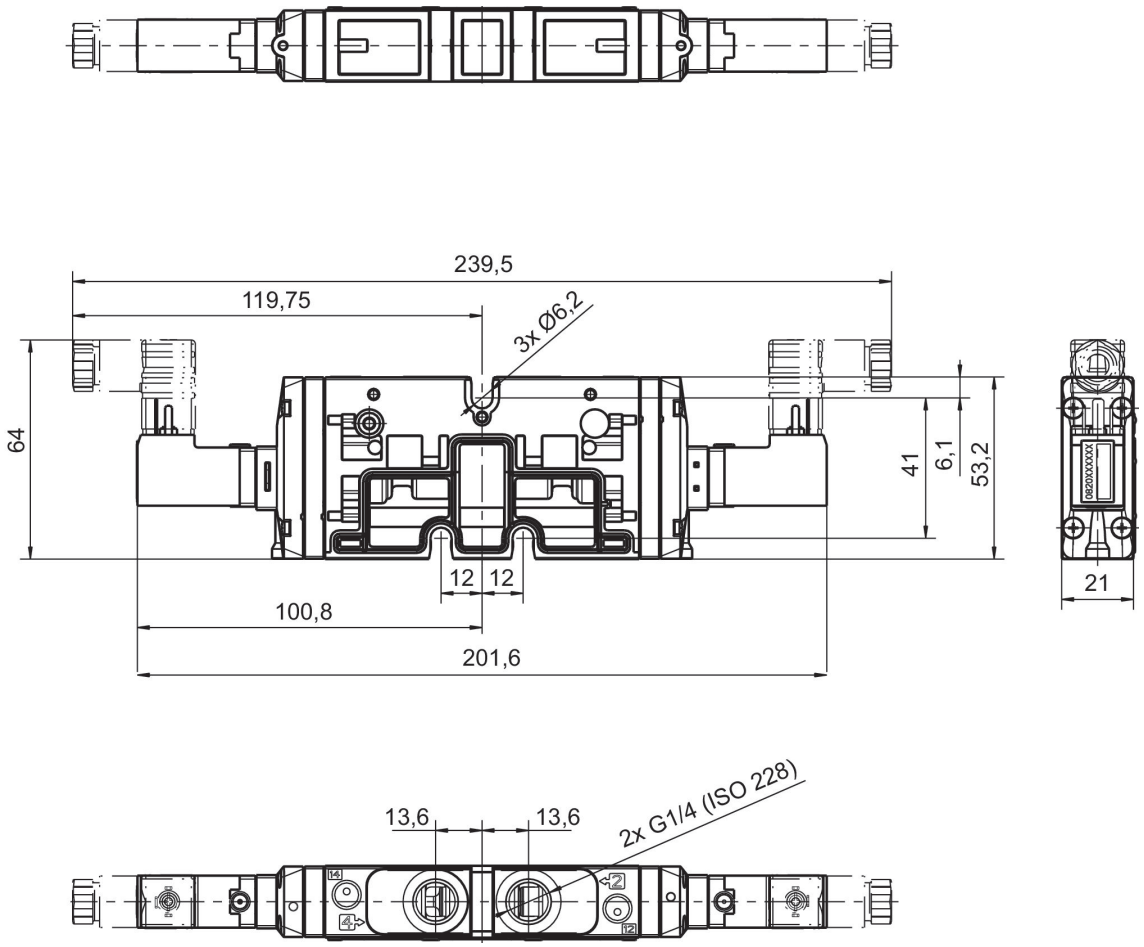
239,5
119,75
3x Ø6,2
64
41
6,1
53,2
12
12
100,8
201,6
21

13,6
13,6
2x G1/4 (ISO 228)

5/2-directional valve, Series TC15

Activation: Electrically
Control pressure min./max.: 10 bar
Duty cycle: 100 %
Type: Spool valve, positive overlapping
Ambient temperature min./max.: -10 °C ... 50 °C
Medium temperature min./max.: -10 °C ... 50 °C
Working pressure min./max.: -0.9 bar ... 10 bar



	Switching principle	Compressed air connection output	Threaded bushing	Operational voltage	Pilot	Power consumption DC [W]	Voltage tolerance DC	Part No.
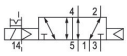	5/2, with air spring return	G 1/4	Brass, Die cast zinc	24 V DC	External	2	-10 % / +10 %	0820058751
	5/2, with spring return	G 1/4	Brass, Die cast zinc	24 V DC	External	2	-10 % / +10 %	0820058761
	5/2, with air spring return	G 1/4	Brass, Die cast zinc	24 V DC	External	2	-10 % / +10 %	0820058851
	5/2, with spring return	G 1/4	Brass, Die cast zinc	24 V DC	External	2	-10 % / +10 %	0820058861

Manual override	Nominal flow Qn 1 to 2 [l/min]	Part No.
with detent	1500	0820058751
with detent	1500	0820058761
without detent	1500	0820058851
without detent	1500	0820058861

Dimensions

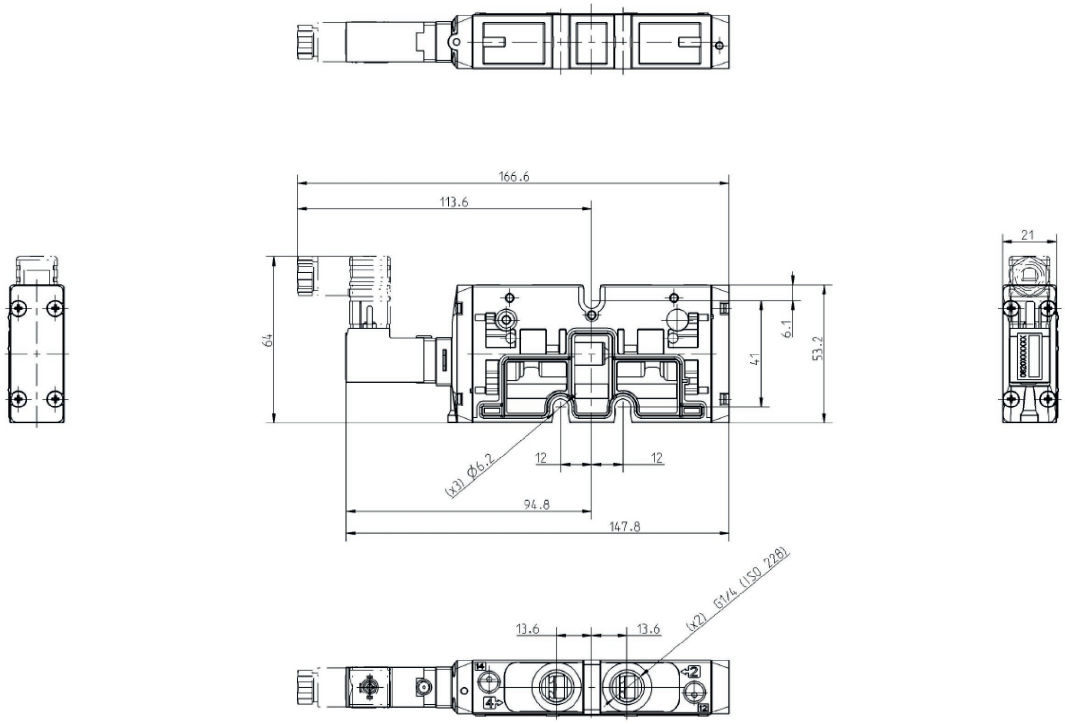
166.6
113.6
64
6.1
41
53.2
21
(x3) Ø6.2
12
12
94.8
147.8
13.6
13.6
(x2) G1/4 (ISO 228)

5/2-directional valve, Series TC15, basic valve

Activation: Electrically
Control pressure min./max.: 10 bar
Duty cycle: 100 %
Type: Spool valve, positive overlapping
Ambient temperature min./max.: -10 °C ... 50 °C
Medium temperature min./max.: -10 °C ... 50 °C
Working pressure min./max.: -0.9 bar ... 10 bar



	Basic valve equipment	Switching principle	Compressed air connection output	Threaded bushing	Pilot	Manual override	Nominal flow Qn 1 to 2 [l/min]	Part No.
	Basic valve without coil	5/2, with spring return	G 1/4	Brass, Die cast zinc	External	with detent	1500	R422103060

5/2-directional valve, Series TC15

Activation: Electrically
Control pressure min./max.: 10 bar
Duty cycle: 100 %
Type: Spool valve, positive overlapping
Ambient temperature min./max.: -10 °C ... 50 °C
Medium temperature min./max.: -10 °C ... 50 °C
Working pressure min./max.: -0.9 bar ... 10 bar



	Switching principle	Compressed air connection output	Threaded bushing	Operational voltage	Pilot	Power consumption DC [W]	Voltage tolerance DC	Part No.
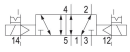	5/2, double solenoid	G 1/4	Brass, Die cast zinc	24 V DC	External	2	-10 % / +10 %	0820058771
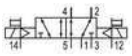	5/2, double solenoid	G 1/4	Brass, Die cast zinc	24 V DC	External	2	-10 % / +10 %	0820058871

Manual override	Nominal flow Qn 1 to 2 [l/min]	Part No.
with detent	1500	0820058771
without detent	1500	0820058871

Dimensions

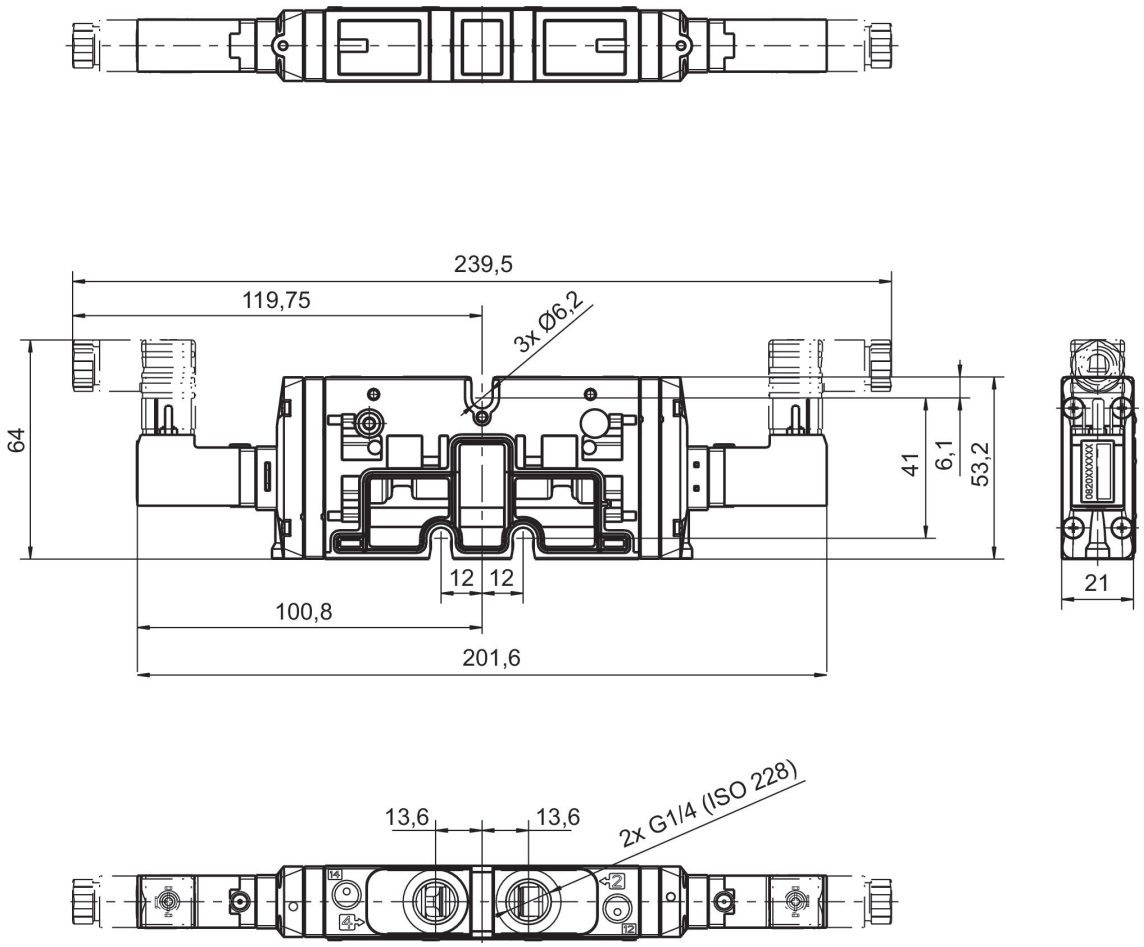
239,5
119,75
3x Ø6,2
64
41
6,1
53,2
12
12
100,8
201,6
21

13,6
13,6
2x G1/4 (ISO 228)

5/2-directional valve, Series TC15, double, basic valve

Activation: Electrically
Control pressure min./max.: 10 bar
Duty cycle: 100 %
Type: Spool valve, positive overlapping
Ambient temperature min./max.: -10 °C ... 50 °C
Medium temperature min./max.: -10 °C ... 50 °C
Working pressure min./max.: -0.9 bar ... 10 bar



	Basic valve equipment	Switching principle	Compressed air connection output	Threaded bushing	Pilot	Manual override	Nominal flow Qn 1 to 2 [l/min]	Part No.
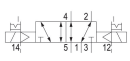	Basic valve without coil	5/2, double solenoid	G 1/4	Brass, Die cast zinc	External	with detent	1500	R422103061

Dimensions

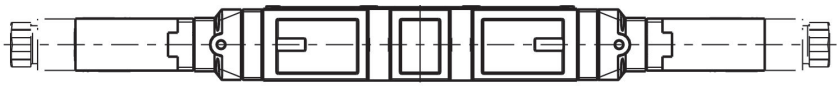

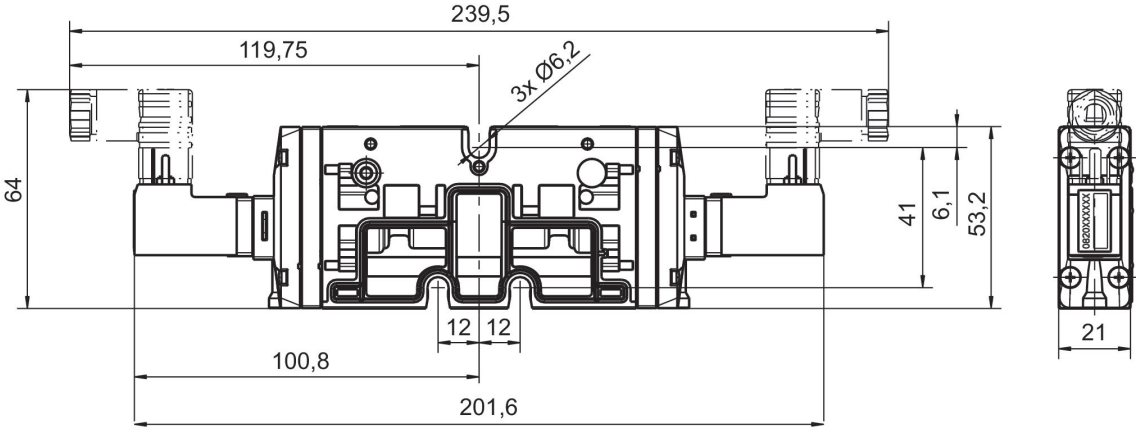

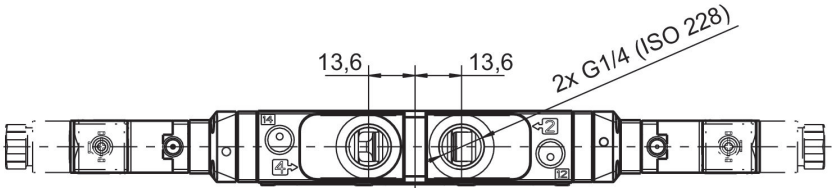

5/3-directional valve, Series TC15

Activation: Electrically
Control pressure min./max.: 10 bar
Duty cycle: 100 %
Type: Spool valve, positive overlapping
Ambient temperature min./max.: -10 °C ... 50 °C
Medium temperature min./max.: -10 °C ... 50 °C
Working pressure min./max.: -0.9 bar ... 10 bar



	Valve function	Switching principle	Compressed air connection output	Threaded bushing	Operational voltage	Pilot	Power consumption DC [W]	Part No.
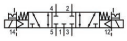	Closed Center	5/3, closed center	G 1/4	Brass, Die cast zinc	24 V DC	External	2	0820059751
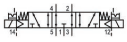	Exhausted Center	5/3, exhausted center	G 1/4	Brass, Die cast zinc	24 V DC	External	2	0820059761
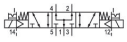	Pressurized Center	5/3, pressurized center	G 1/4	Brass, Die cast zinc	24 V DC	External	2	0820059771
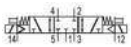	Closed Center	5/3, closed center	G 1/4	Brass, Die cast zinc	24 V DC	External	2	0820059851
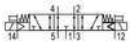	Exhausted Center	5/3, exhausted center	G 1/4	Brass, Die cast zinc	24 V DC	External	2	0820059861
	Pressurized Center	5/3, pressurized center	G 1/4	Brass, Die cast zinc	24 V DC	External	2	0820059871

Voltage tolerance DC	Manual override	Nominal flow Qn 1 to 2 [l/min]	Part No.
-10 % / +10 %	with detent	1300	0820059751
-10 % / +10 %	with detent	1300	0820059761
-10 % / +10 %	with detent	1300	0820059771
-10 % / +10 %	without detent	1300	0820059851
-10 % / +10 %	without detent	1300	0820059861
-10 % / +10 %	without detent	1300	0820059871

Dimensions

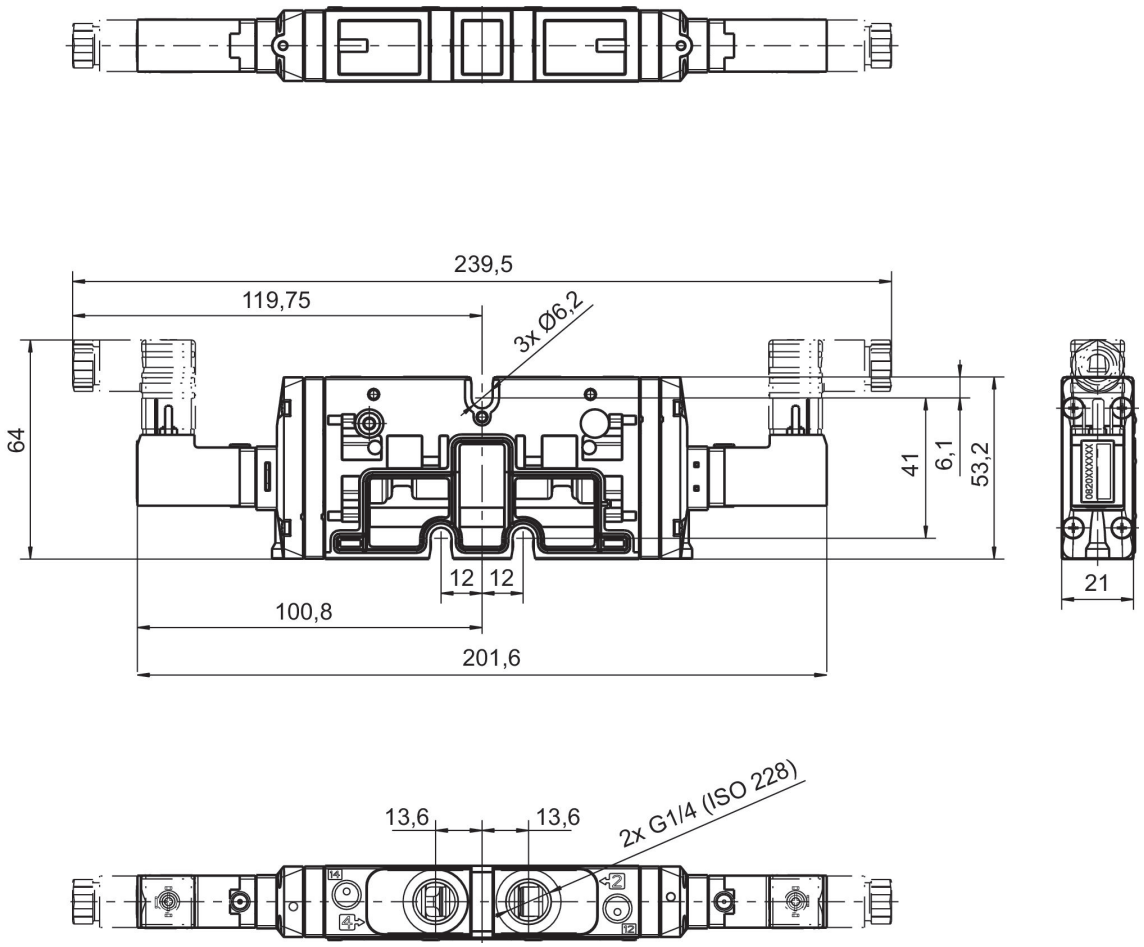
239,5
119,75
3x Ø6,2
64
41
6,1
53,2
12
12
100,8
201,6
21

13,6
13,6
2x G1/4 (ISO 228)

5/3-directional valve, Series TC15, basic valve

Activation: Electrically
Control pressure min./max.: 10 bar
Duty cycle: 100 %
Type: Spool valve, positive overlapping
Ambient temperature min./max.: -10 °C ... 50 °C
Medium temperature min./max.: -10 °C ... 50 °C
Working pressure min./max.: -0.9 bar ... 10 bar



	Valve function	Basic valve equipment	Switching principle	Compressed air connection output	Threaded bushing	Pilot	Manual override	Part No.
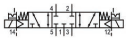	Closed Center	Basic valve without coil	5/3, closed center	G 1/4	Brass, Die cast zinc	External	with detent	R422103062

Nominal flow Qn 1 to 2 [l/min]	Part No.
1300	R422103062

Dimensions

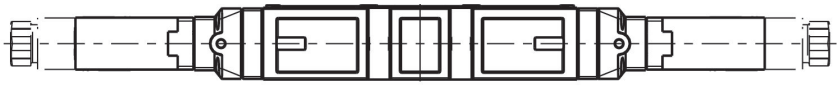

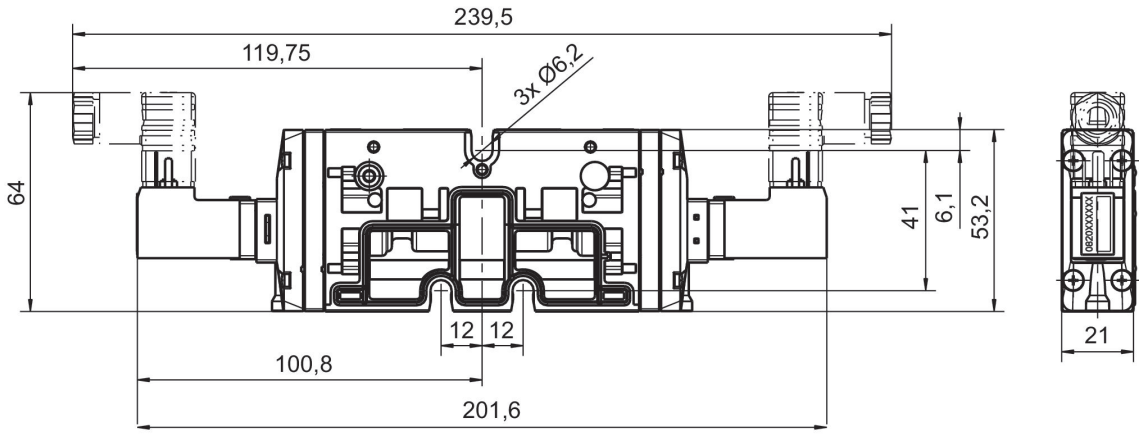

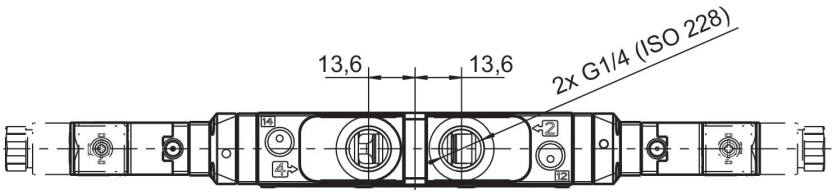

2x3/2-directional valve, Series TC15 - inch

Flow: 1100 l/min
Activation: Electrically
Control pressure min./max.: 3 bar ... 10 bar
Duty cycle: 100 %
Type: Spool valve, positive overlapping
Ambient temperature min./max.: -10 °C ... 50 °C
Medium temperature min./max.: -10 °C ... 50 °C
Working pressure min./max.: -0.9 bar ... 10 bar



	Valve function	Switching principle	Compressed air connection output	Threaded bushing	Operational voltage	Pilot	Power consumption DC [W]	Part No.
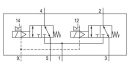	NC/NC	2x 3/2 NC/NC, with spring return	1/4 - 18 NPTF	Brass, Die cast zinc	24 V DC	External	2	R422102260
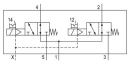	NO/NO	2x 3/2 NO/NO, with spring return	1/4 - 18 NPTF	Brass, Die cast zinc	24 V DC	External	2	R422102264
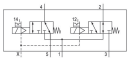	NC/NO	2x 3/2 NC/NO, with spring return	1/4 - 18 NPTF	Brass, Die cast zinc	24 V DC	External	2	R422102268

Voltage tolerance DC	Manual override	Nominal flow Qn 1 to 2 [l/min]	Part No.
-10 % / +10 %	with detent	1100	R422102260
-10 % / +10 %	with detent	1100	R422102264
-10 % / +10 %	with detent	1100	R422102268

Dimensions

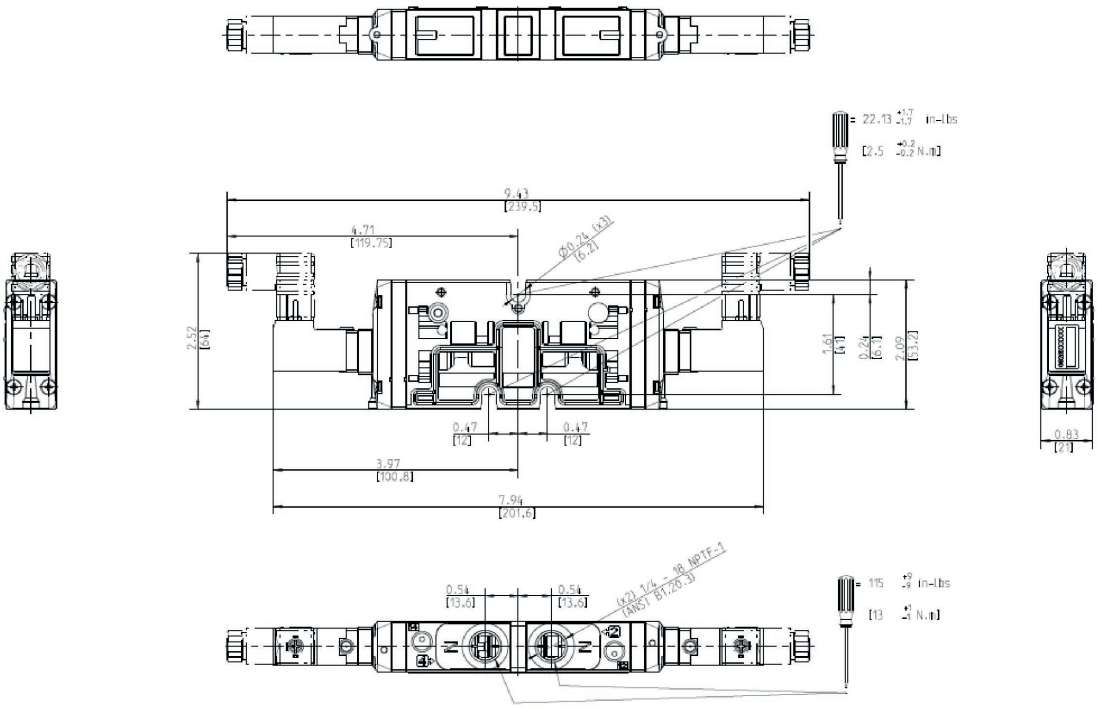
9.43
[239.5]
4.71
[119.75]
2.52
[64]
1.61
[41]
0.24
[6.1]
2.09
[53.2]
0.47
[12]
0.47
[12]
3.97
[100.8]
7.94
[201.6]
0.83
[21]
0.54
[13.8]
0.54
[13.8]

5/2-directional valve, Series TC15, inch

Flow: 1100 l/min
Activation: Electrically
Control pressure min./max.: 3 bar ... 10 bar
Duty cycle: 100 %
Type: Spool valve
Ambient temperature min./max.: -10 °C ... 50 °C
Medium temperature min./max.: -10 °C ... 50 °C
Working pressure min./max.: -0.9 bar ... 10 bar



	Switching principle	Compressed air connection output	Threaded bushing	Operational voltage	Pilot	Power consumption DC [W]	Voltage tolerance DC	Part No.
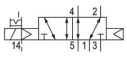	5/2, with air spring return	1/4 - 18 NPTF	Brass, Die cast zinc	24 V DC	External	2	-10 % / +10 %	R422101177
	5/2, with spring return	1/4 - 18 NPTF	Brass, Die cast zinc	24 V DC	External	2	-10 % / +10 %	R422101181

Manual override	Nominal flow Qn 1 to 2 [l/min]	Part No.
with detent	1500	R422101177
with detent	1500	R422101181

Dimensions in mm
Double Solenoid

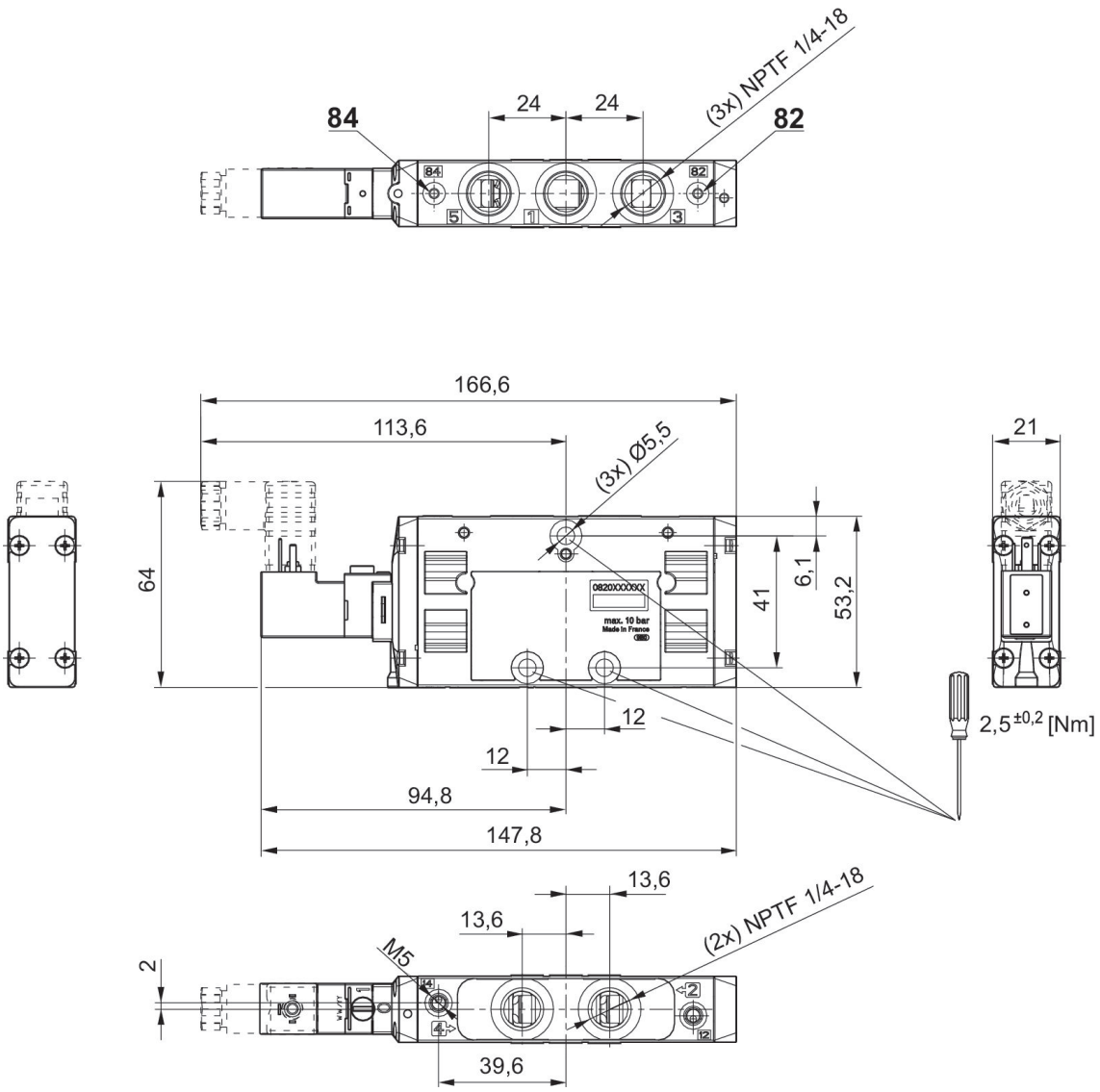

5/2-directional valve, Series TC15, double, inch

Flow: 1100 l/min
Activation: Electrically
Control pressure min./max.: 3 bar ... 10 bar
Duty cycle: 100 %
Type: Spool valve
Ambient temperature min./max.: -10 °C ... 50 °C
Medium temperature min./max.: -10 °C ... 50 °C
Working pressure min./max.: -0.9 bar ... 10 bar



	Switching principle	Compressed air connection output	Threaded bushing	Operational voltage	Pilot	Power consumption DC [W]	Voltage tolerance DC	Part No.
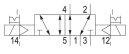	5/2, with spring return	1/4 - 18 NPTF	Brass, Die cast zinc	24 V DC	External	2	-10 % / +10 %	R422101185

Manual override	Nominal flow Qn 1 to 2 [l/min]	Part No.
with detent	1500	R422101185

Dimensions in mm

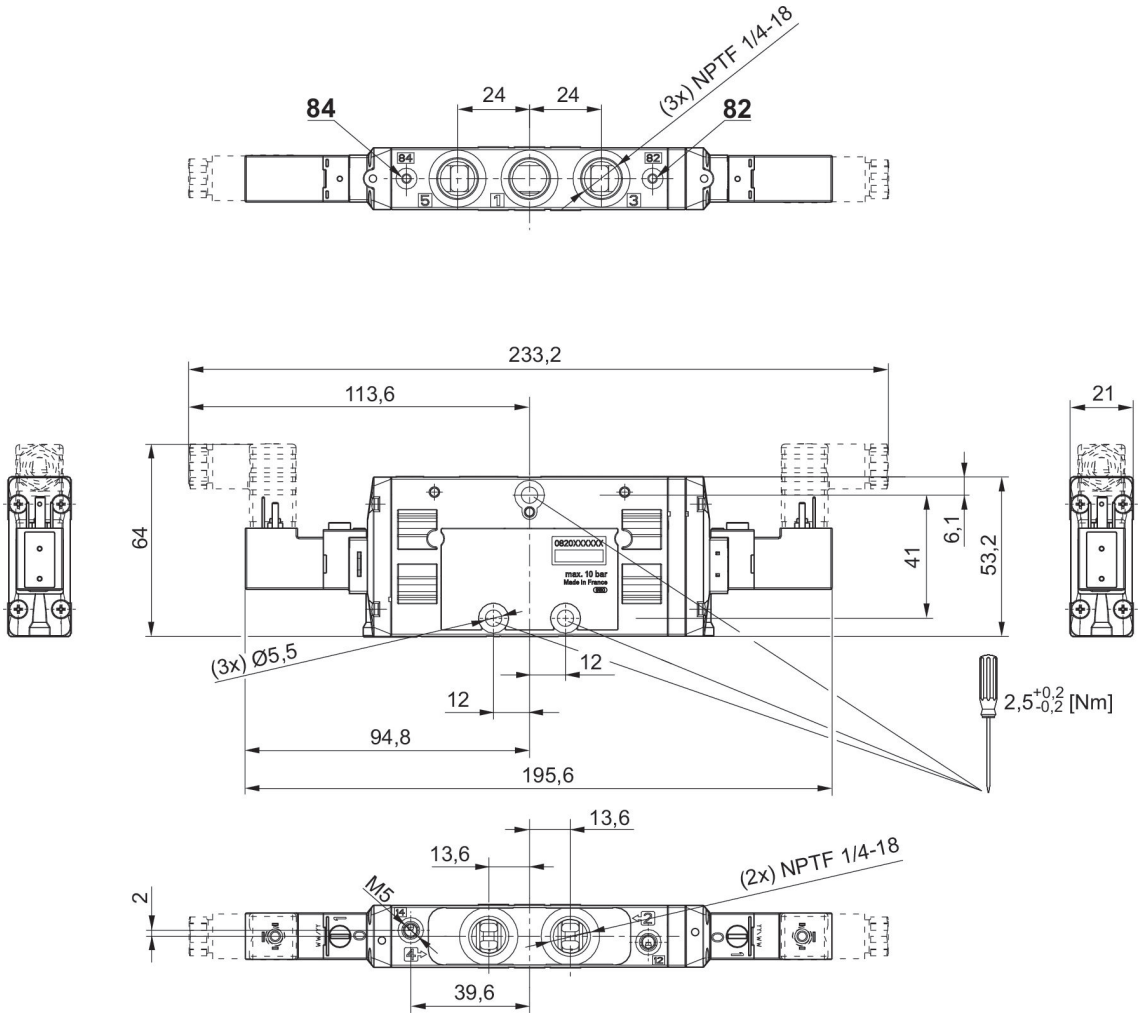

5/3-directional valve, Series TC15 - inch

Flow: 1100 l/min
Activation: Electrically
Control pressure min./max.: 3 bar ... 10 bar
Duty cycle: 100 %
Type: Spool valve, positive overlapping
Ambient temperature min./max.: -10 °C ... 50 °C
Medium temperature min./max.: -10 °C ... 50 °C
Working pressure min./max.: -0.9 bar ... 10 bar



	Switching principle	Compressed air connection output	Threaded bushing	Operational voltage	Pilot	Power consumption DC [W]	Voltage tolerance DC	Part No.
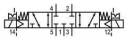	5/3, closed center	1/4 - 18 NPTF	Brass, Die cast zinc	24 V DC	External	2	-10 % / +10 %	R422101189
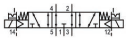	5/3, exhausted center	1/4 - 18 NPTF	Brass, Die cast zinc	24 V DC	External	2	-10 % / +10 %	R422101193
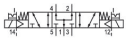	5/3, pressurized center	1/4 - 18 NPTF	Brass, Die cast zinc	24 V DC	External	2	-10 % / +10 %	R422101197

Manual override	Nominal flow Qn 1 to 2 [l/min]	Part No.
with detent	1300	R422101189
with detent	1300	R422101193
with detent	1300	R422101197

Dimensions

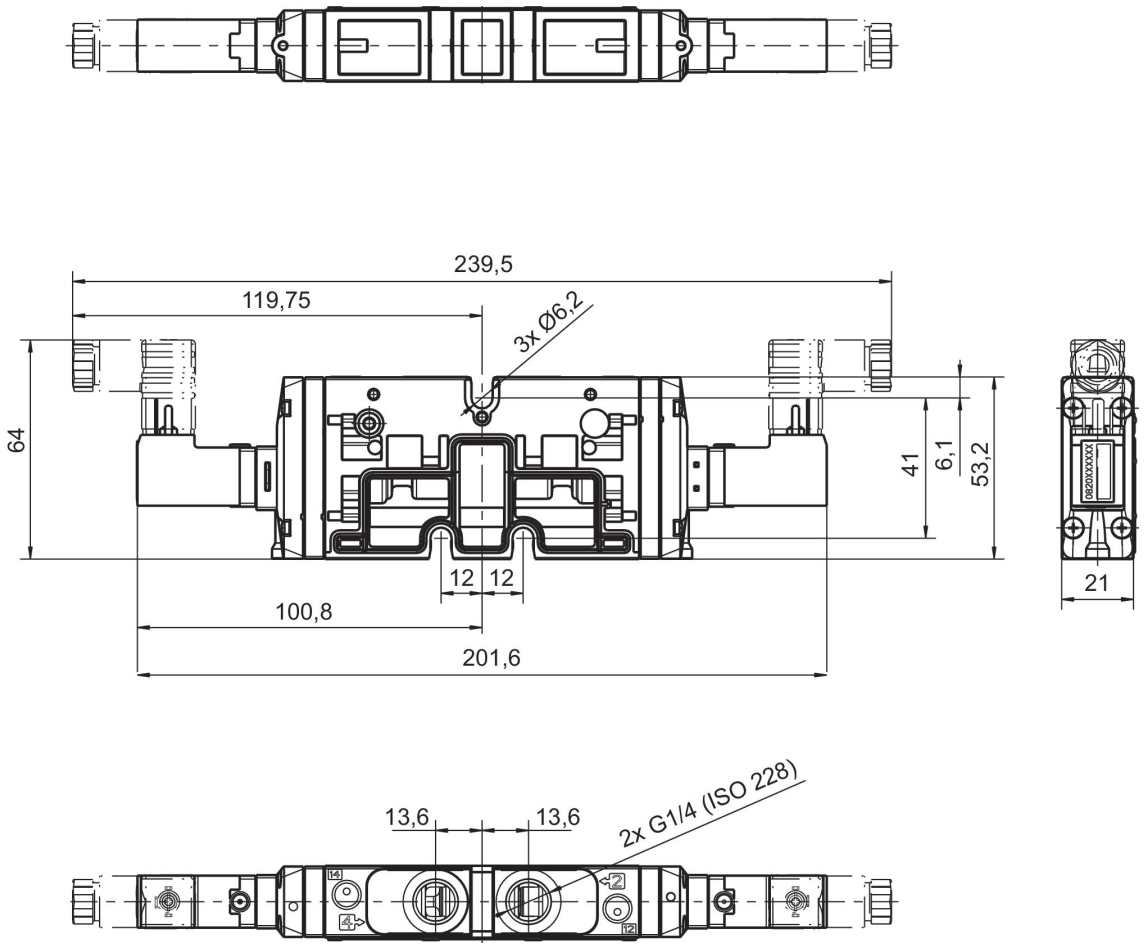
239,5
119,75
3x Ø6,2
64
41
6,1
53,2
12
12
100,8
201,6
21

13,6
13,6
2x G1/4 (ISO 228)

2x3/2-directional valve, Series TC15

Flow: 1100 l/min
Activation: Electrically
Control pressure min./max.: 3 bar ... 10 bar
Type: Spool valve, positive overlapping
Ambient temperature min./max.: -10 °C ... 50 °C
Medium temperature min./max.: -10 °C ... 50 °C
Working pressure min./max.: -0.9 bar ... 10 bar



	Valve function	Switching principle	Compressed air connection output	Threaded bushing	Operational voltage	Pilot	Power consumption DC [W]	Part No.
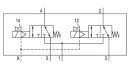	NC/NC	2x 3/2 NC/NC, with spring return	G 1/4	Brass, Die cast zinc	24 V DC	External	2.2	R422102226
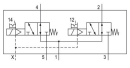	NO/NO	2x 3/2 NO/NO, with spring return	G 1/4	Brass, Die cast zinc	24 V DC	External	2.2	R422102227
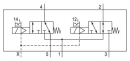	NC/NO	2x 3/2 NC/NO, with spring return	G 1/4	Brass, Die cast zinc	24 V DC	External	2.2	R422102228

Voltage tolerance DC	Manual override	Nominal flow Qn 1 to 2 [l/min]	Part No.
-10 % / +10 %	with detent	1100	R422102226
-10 % / +10 %	with detent	1100	R422102227
-10 % / +10 %	with detent	1100	R422102228

Dimensions

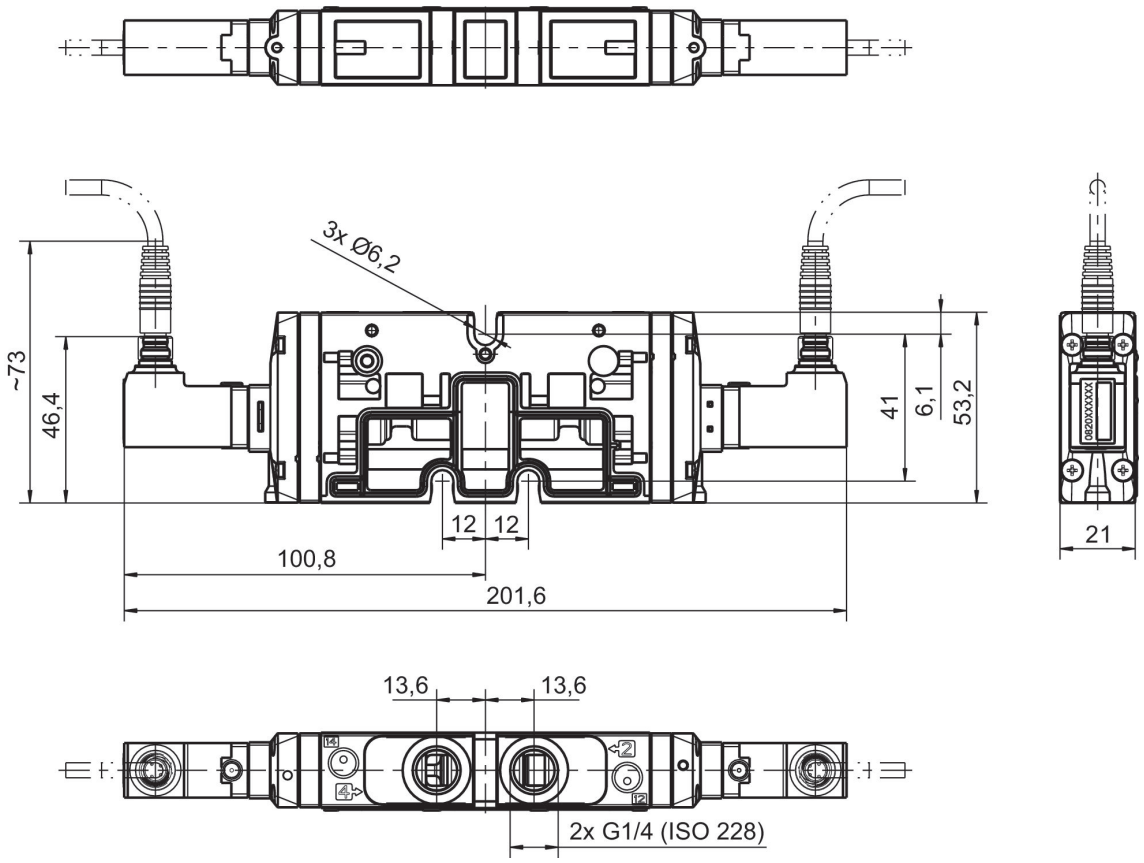

5/2-directional valve, Series TC15, double, with detend

Activation: Electrically
Control pressure min./max.: 10 bar
Duty cycle: 100 %
Type: Spool valve, positive overlapping
Ambient temperature min./max.: -10 °C ... 50 °C
Medium temperature min./max.: -10 °C ... 50 °C
Working pressure min./max.: -0.9 bar ... 10 bar



	Switching principle	Compressed air connection output	Threaded bushing	Operational voltage	Pilot	Power consumption DC [W]	Voltage tolerance DC	Part No.
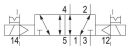	5/2, double solenoid	G 1/4	Brass, Die cast zinc	24 V DC	External	2.2	-10 % / +10 %	R422100982

Manual override	Nominal flow Qn 1 to 2 [l/min]	Part No.
with detent	1500	R422100982

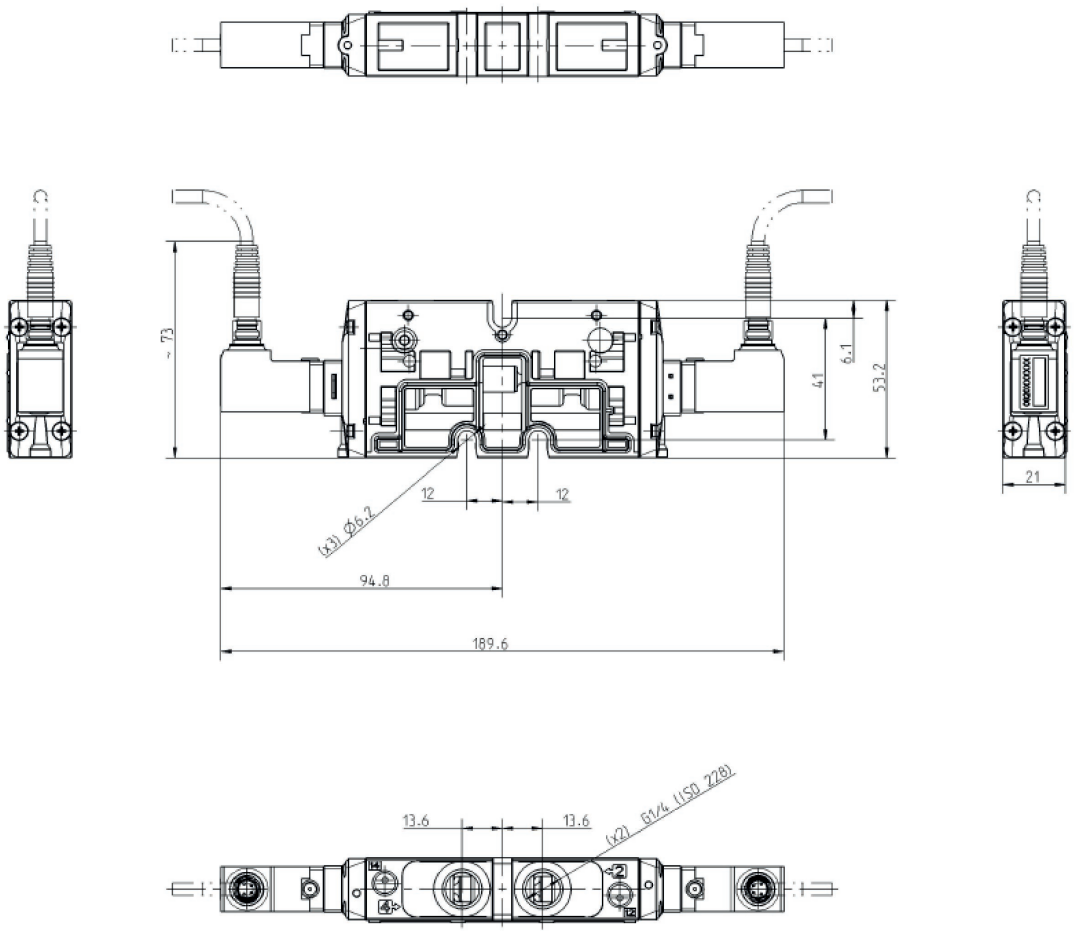

R422100982

PIN assignment and cable colors for valve plug connectors

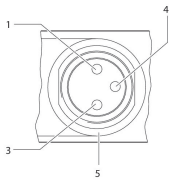

PIN assignment: 1) PIN not assigned 3) 0 V 4) 24 V 5) LED Cable color 1) Brown 3) Blue 4) Black
Note: Bi-polar protective circuit to prevent overvoltage

5/2-directional valve, Series TC15

Activation: Electrically
Control pressure min./max.: 10 bar
Duty cycle: 100 %
Type: Spool valve, positive overlapping
Ambient temperature min./max.: -10 °C ... 50 °C
Medium temperature min./max.: -10 °C ... 50 °C
Working pressure min./max.: -0.9 bar ... 10 bar



	Switching principle	Compressed air connection output	Compressed air connection, exhaust	Threaded bushing	Operational voltage	Pilot	Power consumption DC [W]	Part No.
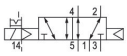	5/2, with air spring return	G 1/4	flange	Brass, Die cast zinc	24 V DC	External	2.2	R422100980
	5/2, with spring return	G 1/4		Brass, Die cast zinc	24 V DC	External	2.2	R422100981

Voltage tolerance DC	Manual override	Nominal flow Qn 1 to 2 [l/min]	Part No.
-10 % / +10 %	with detent	1500	R422100980
-10 % / +10 %	with detent	1500	R422100981

Dimensions
Double Solenoid

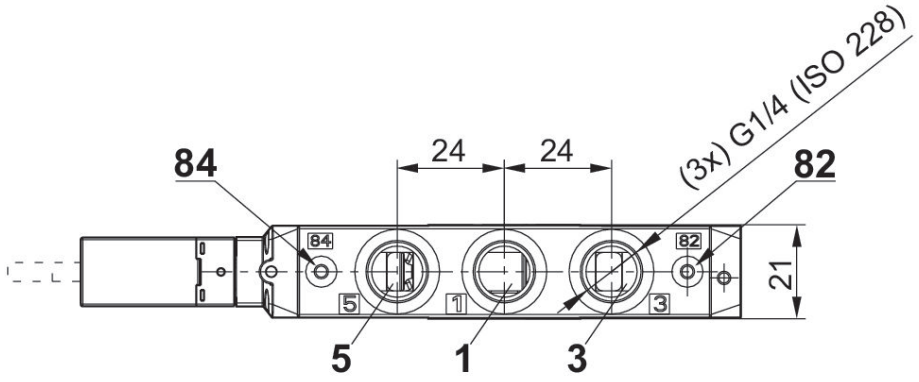

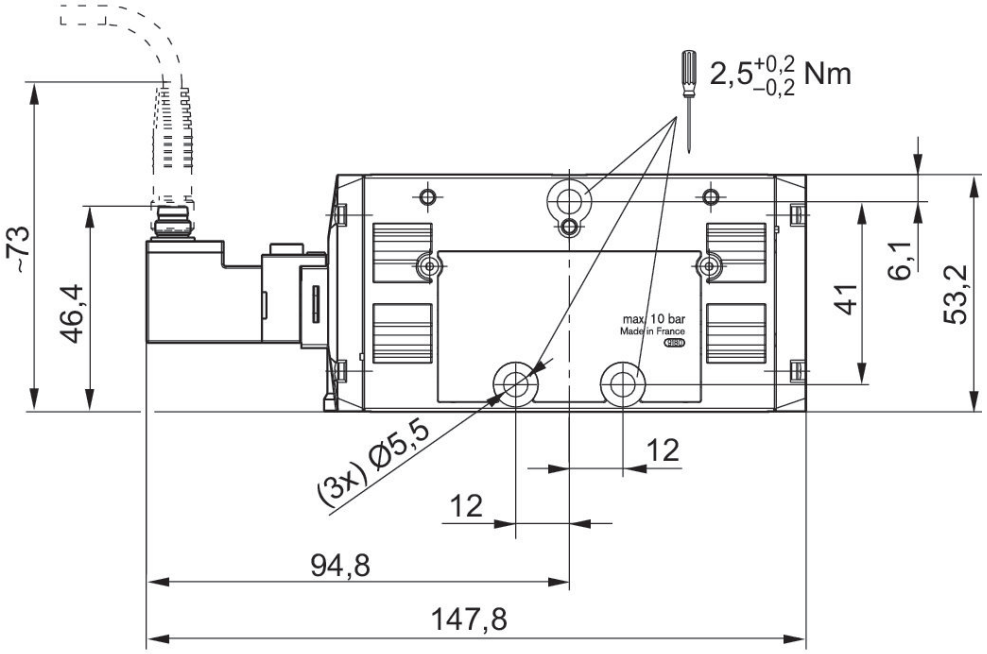

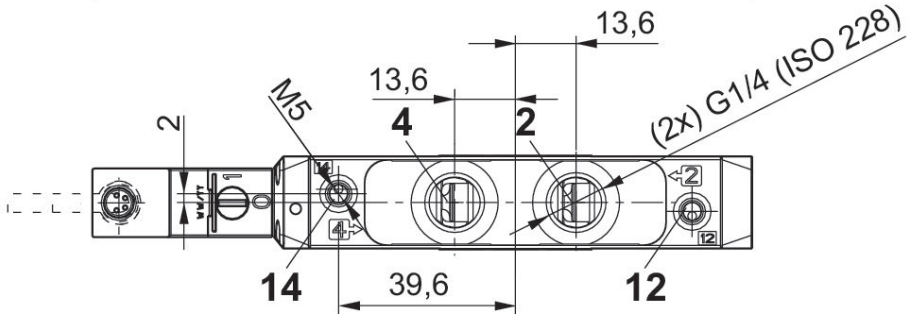

R422100980, R422100981

PIN assignment and cable colors for valve plug connectors

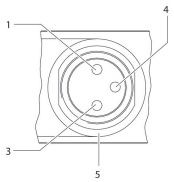

PIN assignment: 1) PIN not assigned 3) 0 V 4) 24 V 5) LED Cable color 1) Brown 3) Blue 4) Black
Note: Bi-polar protective circuit to prevent overvoltage

5/3-directional valve, Series TC15

Activation: Electrically
Control pressure min./max.: 10 bar
Duty cycle: 100 %
Type: Spool valve, positive overlapping
Ambient temperature min./max.: -10 °C ... 50 °C
Medium temperature min./max.: -10 °C ... 50 °C
Working pressure min./max.: -0.9 bar ... 10 bar



	Valve function	Switching principle	Compressed air connection output	Threaded bushing	Operational voltage	Pilot	Power consumption DC [W]	Part No.
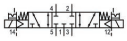	Closed Center	5/3, closed center	G 1/4	Brass, Die cast zinc	24 V DC	External	2.2	R422100983
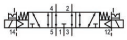	Exhausted Center	5/3, exhausted center	G 1/4	Brass, Die cast zinc	24 V DC	External	2.2	R422100984
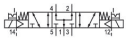	Pressurized Center	5/3, pressurized center	G 1/4	Brass, Die cast zinc	24 V DC	External	2.2	R422100985

Voltage tolerance DC	Manual override	Nominal flow Qn 1 to 2 [l/min]	Part No.
-10 % / +10 %	with detent	1300	R422100983
-10 % / +10 %	with detent	1300	R422100984
-10 % / +10 %	with detent	1300	R422100985

Dimensions

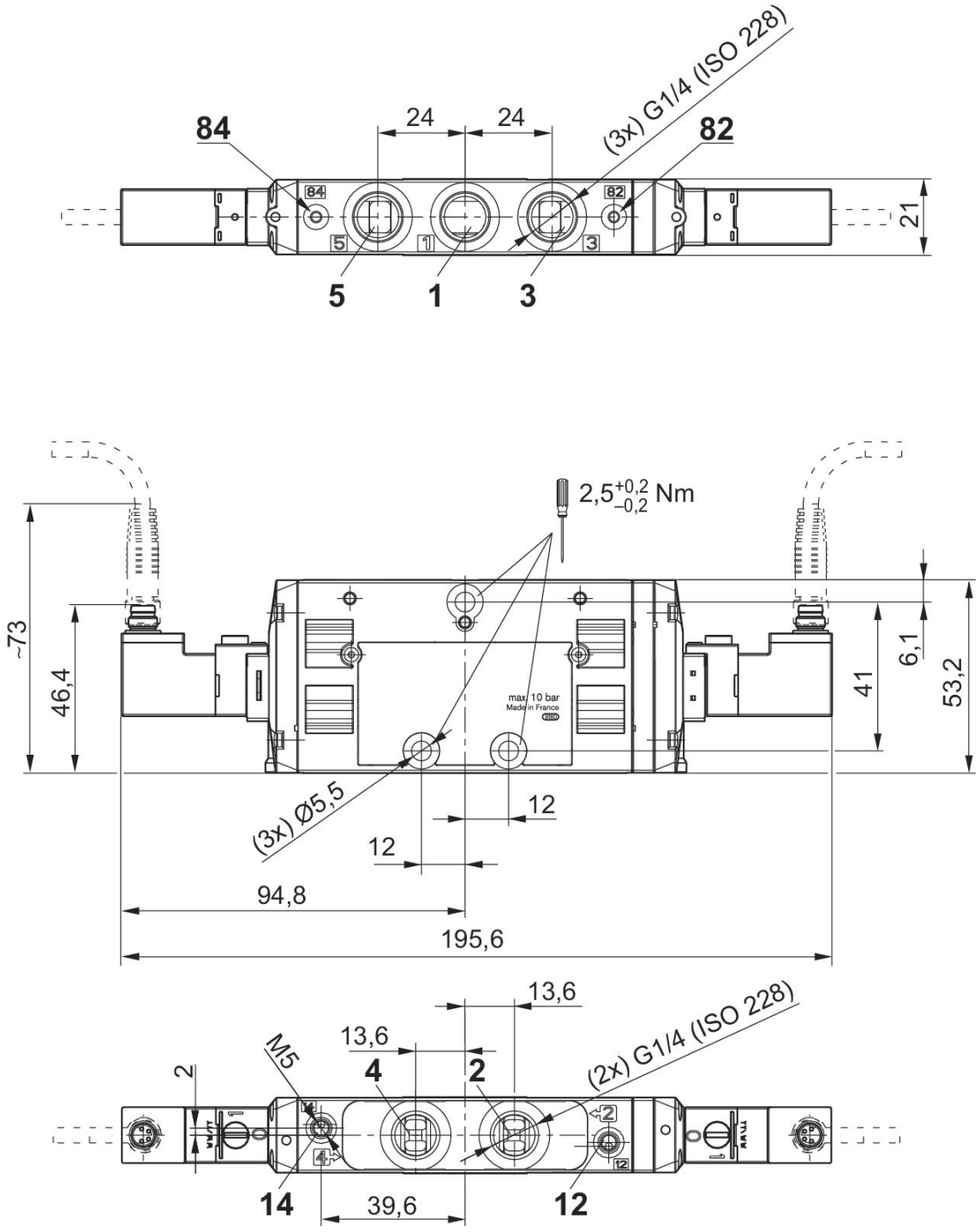
84
24
24
(3x) G1/4 (ISO 228)
82
21
5
1
3
~73
46,4
2,5+0,2 −0,2 Nm
max. 10 bar
Made in France
41
6,1
53,2
(3x) Ø5,5
12
12
94,8
195,6
13,6
13,6
M5
2
4
2
(2x) G1/4 (ISO 228)
14
39,6
12

R422100983, R422100984, R422100985

PIN assignment and cable colors for valve plug connectors

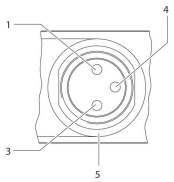

PIN assignment: 1) PIN not assigned 3) 0 V 4) 24 V 5) LED Cable color 1) Brown 3) Blue 4) Black
Note: Bi-polar protective circuit to prevent overvoltage

2x3/2-directional valve, Series TC15

Flow: 1100 l/min
Activation: Electrically
Control pressure min./max.: 3 bar ... 10 bar
Duty cycle: 100 %
Type: Spool valve, positive overlapping
Ambient temperature min./max.: -10 °C ... 50 °C
Medium temperature min./max.: -10 °C ... 50 °C
Working pressure min./max.: -0.9 bar ... 10 bar



	Valve function	Switching principle	Compressed air connection output	Threaded bushing	Operational voltage	Pilot	Power consumption DC [W]	Part No.
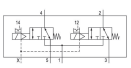	NC/NC	2x 3/2 NC/NC, with spring return	G 1/4	Brass, Die cast zinc	24 V DC	External	2.2	R422102220
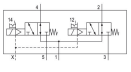	NO/NO	2x 3/2 NO/NO, with spring return	G 1/4	Brass, Die cast zinc	24 V DC	External	2.2	R422102221
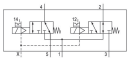	NC/NO	2x 3/2 NC/NO, with spring return	G 1/4	Brass, Die cast zinc	24 V DC	External	2.2	R422102222
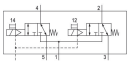	NC/NC	2x 3/2 NC/NC, with spring return	G 1/4	Brass, Die cast zinc	24 V DC	External	2.2	R422102223
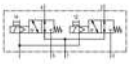	NO/NO	2x 3/2 NO/NO, with spring return	G 1/4	Brass, Die cast zinc	24 V DC	External	2.2	R422102224
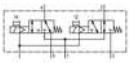	NC/NO	2x 3/2 NC/NO, with spring return	G 1/4	Brass, Die cast zinc	24 V DC	External	2.2	R422102225

Voltage tolerance DC	Manual override	Nominal flow Qn 1 to 2 [l/min]	Part No.
-10 % / +10 %	with detent	1100	R422102220
-10 % / +10 %	with detent	1100	R422102221
-10 % / +10 %	with detent	1100	R422102222
-10 % / +10 %	without detent	1100	R422102223
-10 % / +10 %	without detent	1100	R422102224
-10 % / +10 %	without detent	1100	R422102225

Dimensions

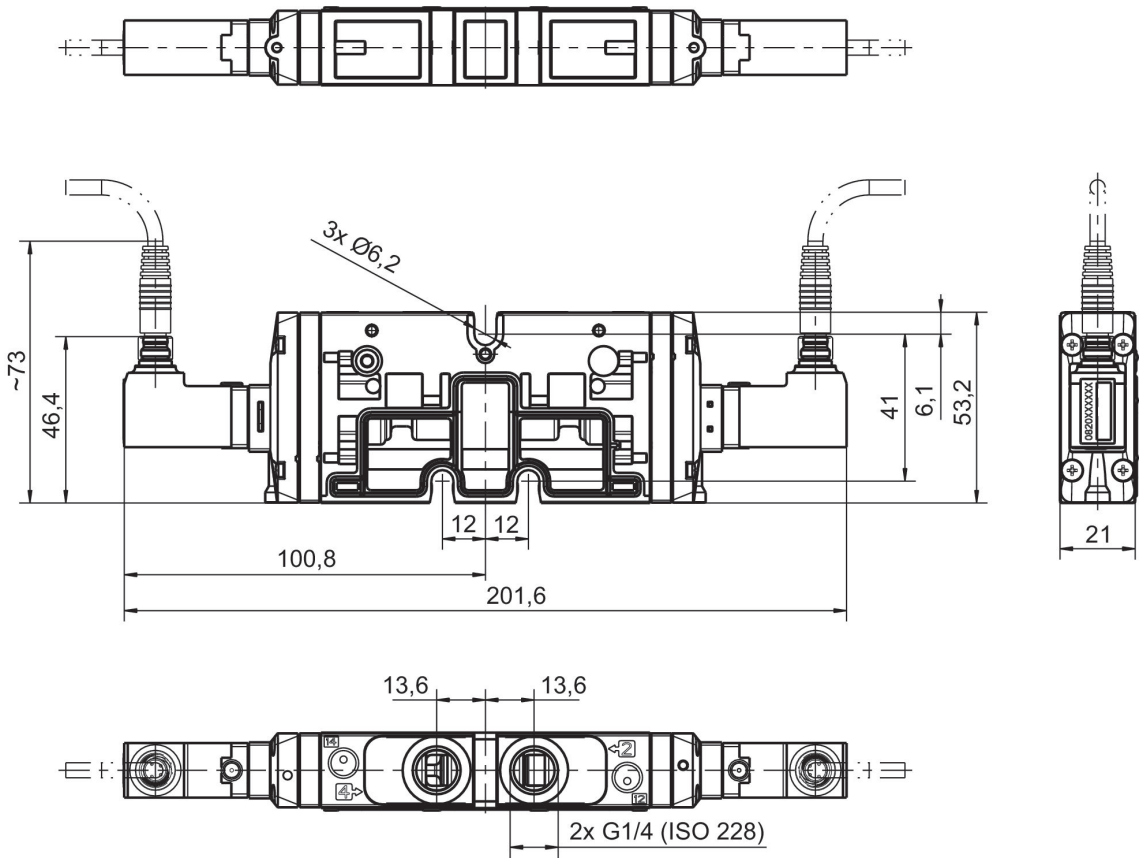

5/2-directional valve, Series TC15, double

Activation: Electrically
Control pressure min./max.: 10 bar
Duty cycle: 100 %
Type: Spool valve, positive overlapping
Ambient temperature min./max.: -10 °C ... 50 °C
Medium temperature min./max.: -10 °C ... 50 °C
Working pressure min./max.: -0.9 bar ... 10 bar



	Switching principle	Compressed air connection output	Threaded bushing	Operational voltage	Pilot	Power consumption DC [W]	Voltage tolerance DC	Part No.
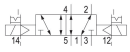	5/2, double solenoid	G 1/4	Brass, Die cast zinc	24 V DC	External	2.2	-10 % / +10 %	0820058798
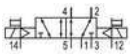	5/2, double solenoid	G 1/4	Brass, Die cast zinc	24 V DC	External	2.2	-10 % / +10 %	0820058898

Manual override	Nominal flow Qn 1 to 2 [l/min]	Part No.
with detent	1500	0820058798
without detent	1500	0820058898

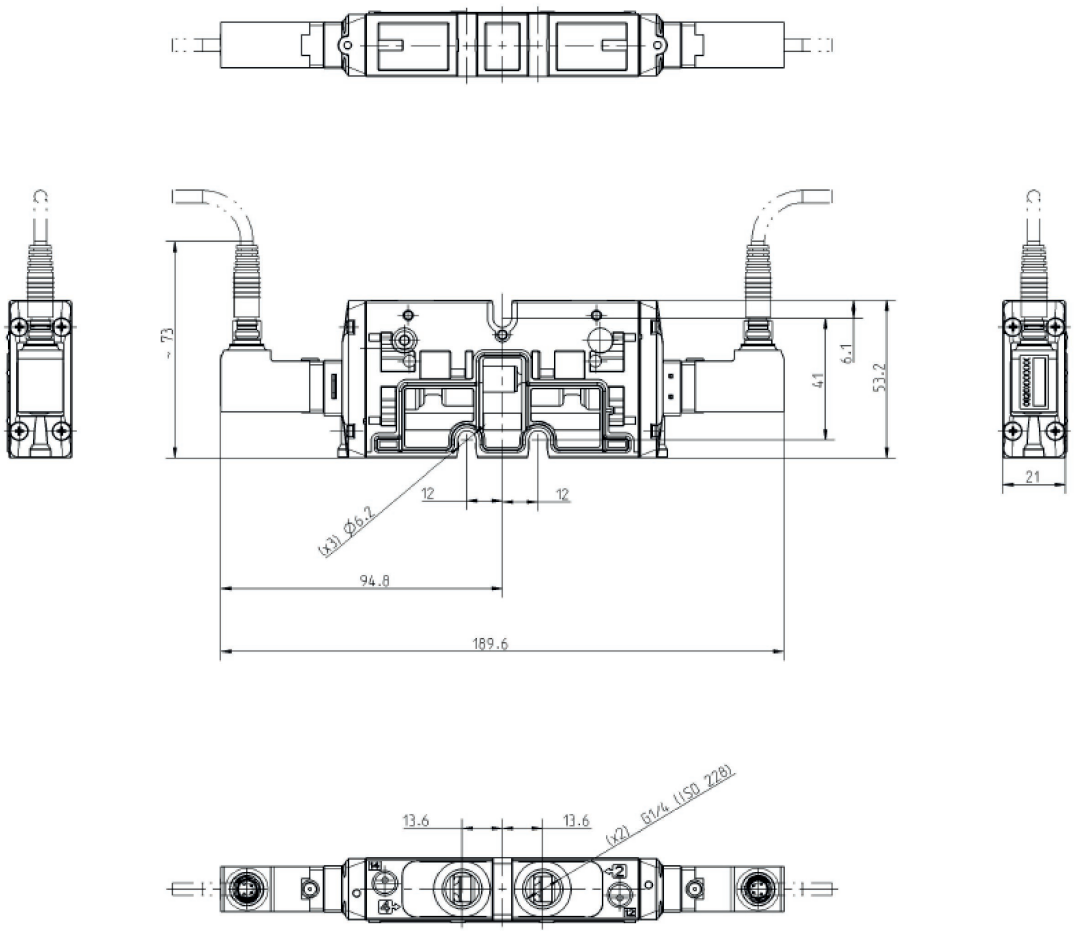

0820058798, 0820058898

PIN assignment and cable colors for valve plug connectors

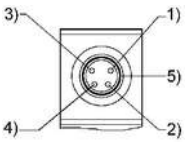

PIN assignment: 1) PIN not assigned 2) PIN not assigned 3) 0 V 4) 24 V 5) LED Cable colors 1) Brown 2) White 3) Blue 4) Black

5/2-directional valve, Series TC15, without detent

Activation: Electrically
Control pressure min./max.: 10 bar
Duty cycle: 100 %
Type: Spool valve, positive overlapping
Ambient temperature min./max.: -10 °C ... 50 °C
Medium temperature min./max.: -10 °C ... 50 °C
Working pressure min./max.: -0.9 bar ... 10 bar



	Switching principle	Compressed air connection output	Threaded bushing	Operational voltage	Pilot	Power consumption DC [W]	Voltage tolerance DC	Part No.
	5/2, with air spring return	G 1/4	Brass, Die cast zinc	24 V DC	External	2.2	-10 % / +10 %	0820058896
	5/2, with spring return	G 1/4	Brass, Die cast zinc	24 V DC	External	2.2	-10 % / +10 %	0820058897

Manual override	Nominal flow Qn 1 to 2 [l/min]	Part No.
without detent	1500	0820058896
without detent	1500	0820058897

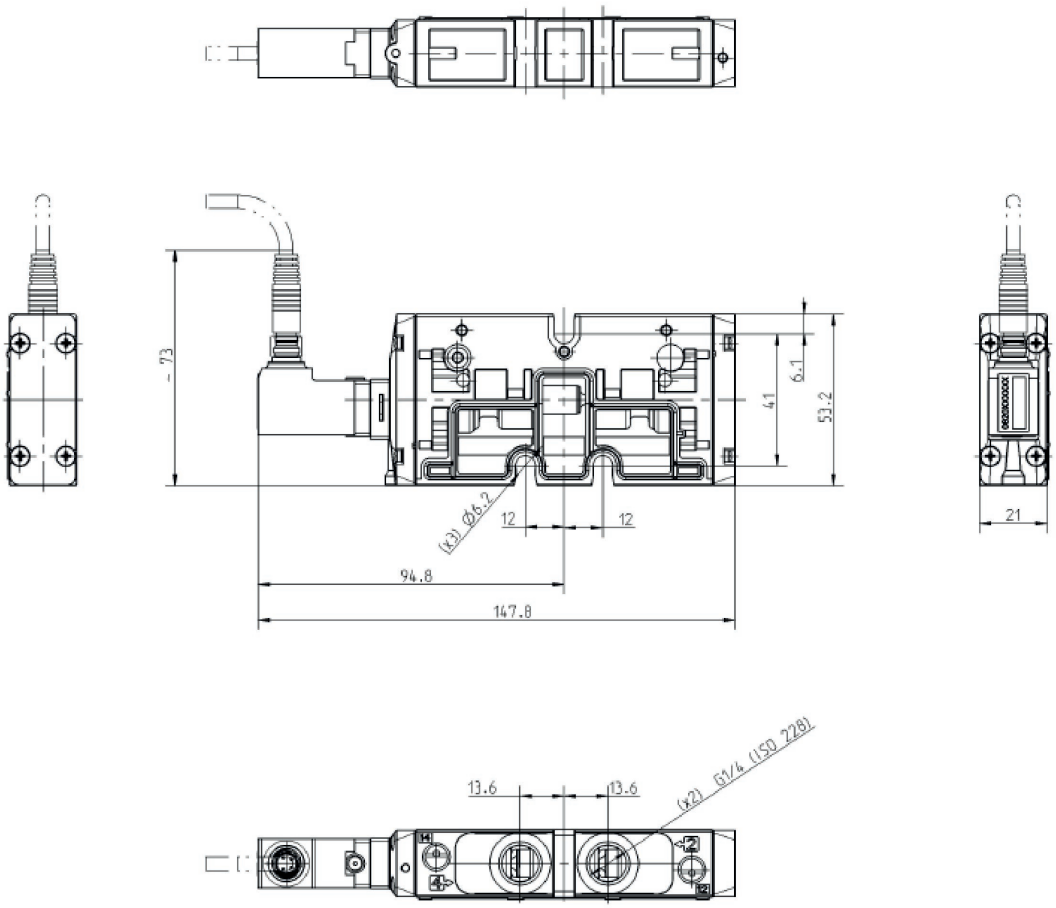

0820058896, 0820058897

PIN assignment and cable colors for valve plug connectors

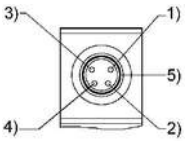

PIN assignment: 1) PIN not assigned 2) PIN not assigned 3) 0 V 4) 24 V 5) LED Cable colors 1) Brown 2) White 3) Blue 4) Black

5/2-directional valve, Series TC15, with detent

Activation: Electrically
Control pressure min./max.: 10 bar
Duty cycle: 100 %
Type: Spool valve, positive overlapping
Ambient temperature min./max.: -10 °C ... 50 °C
Medium temperature min./max.: -10 °C ... 50 °C
Working pressure min./max.: -0.9 bar ... 10 bar



	Switching principle	Compressed air connection output	Threaded bushing	Operational voltage	Pilot	Power consumption DC [W]	Voltage tolerance DC	Part No.
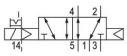	5/2, with air spring return	G 1/4	Brass, Die cast zinc	24 V DC	External	2.2	-10 % / +10 %	0820058796
	5/2, with spring return	G 1/4	Brass, Die cast zinc	24 V DC	External	2.2	-10 % / +10 %	0820058797

Manual override	Nominal flow Qn 1 to 2 [l/min]	Part No.
with detent	1500	0820058796
with detent	1500	0820058797

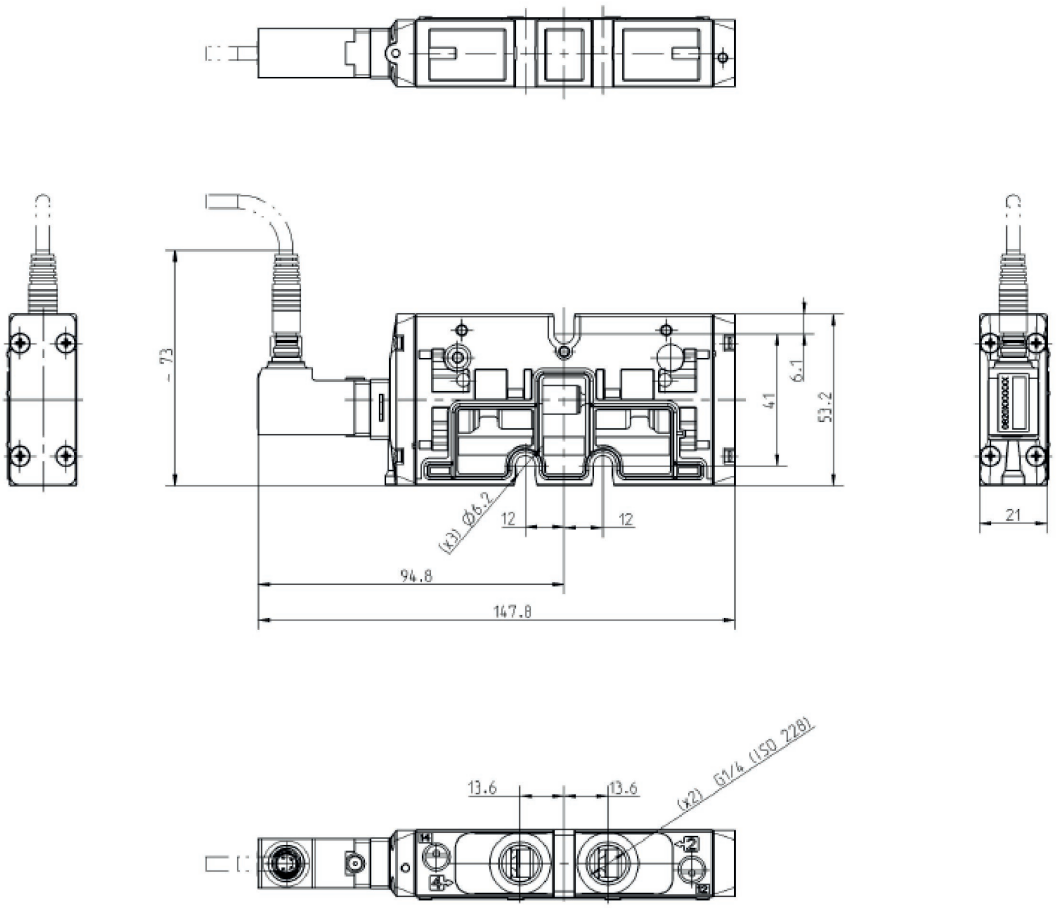

0820058796, 0820058797

PIN assignment and cable colors for valve plug connectors

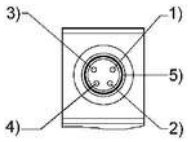

PIN assignment: 1) PIN not assigned 2) PIN not assigned 3) 0 V 4) 24 V 5) LED Cable colors 1) Brown 2) White 3) Blue 4) Black

5/3-directional valve, Series TC15

Activation: Electrically
Control pressure min./max.: 10 bar
Duty cycle: 100 %
Type: Spool valve, positive overlapping
Ambient temperature min./max.: -10 °C ... 50 °C
Medium temperature min./max.: -10 °C ... 50 °C
Working pressure min./max.: -0.9 bar ... 10 bar



	Valve function	Switching principle	Compressed air connection output	Threaded bushing	Operational voltage	Pilot	Power consumption DC [W]	Part No.
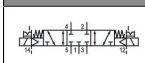	Closed Center	5/3, closed center	G 1/4	Brass, Die cast zinc	24 V DC	External	2.2	0820059796
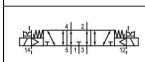	Exhausted Center	5/3, exhausted center	G 1/4	Brass, Die cast zinc	24 V DC	External	2.2	0820059797
	Pressurized Center	5/3, pressurized center	G 1/4	Brass, Die cast zinc	24 V DC	External	2.2	0820059798
	Closed Center	5/3, closed center	G 1/4	Brass, Die cast zinc	24 V DC	External	2.2	0820059896
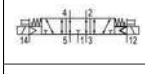	Exhausted Center	5/3, exhausted center	G 1/4	Brass, Die cast zinc	24 V DC	External	2.2	0820059897
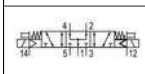	Pressurized Center	5/3, pressurized center	G 1/4	Brass, Die cast zinc	24 V DC	External	2.2	0820059898

Voltage tolerance DC	Manual override	Nominal flow Qn 1 to 2 [l/min]	Part No.
-10 % / +10 %	with detent	1300	0820059796
-10 % / +10 %	with detent	1300	0820059797
-10 % / +10 %	with detent	1300	0820059798
-10 % / +10 %	without detent	1300	0820059896
-10 % / +10 %	without detent	1300	0820059897
-10 % / +10 %	without detent	1300	0820059898

Dimensions
Double Solenoid

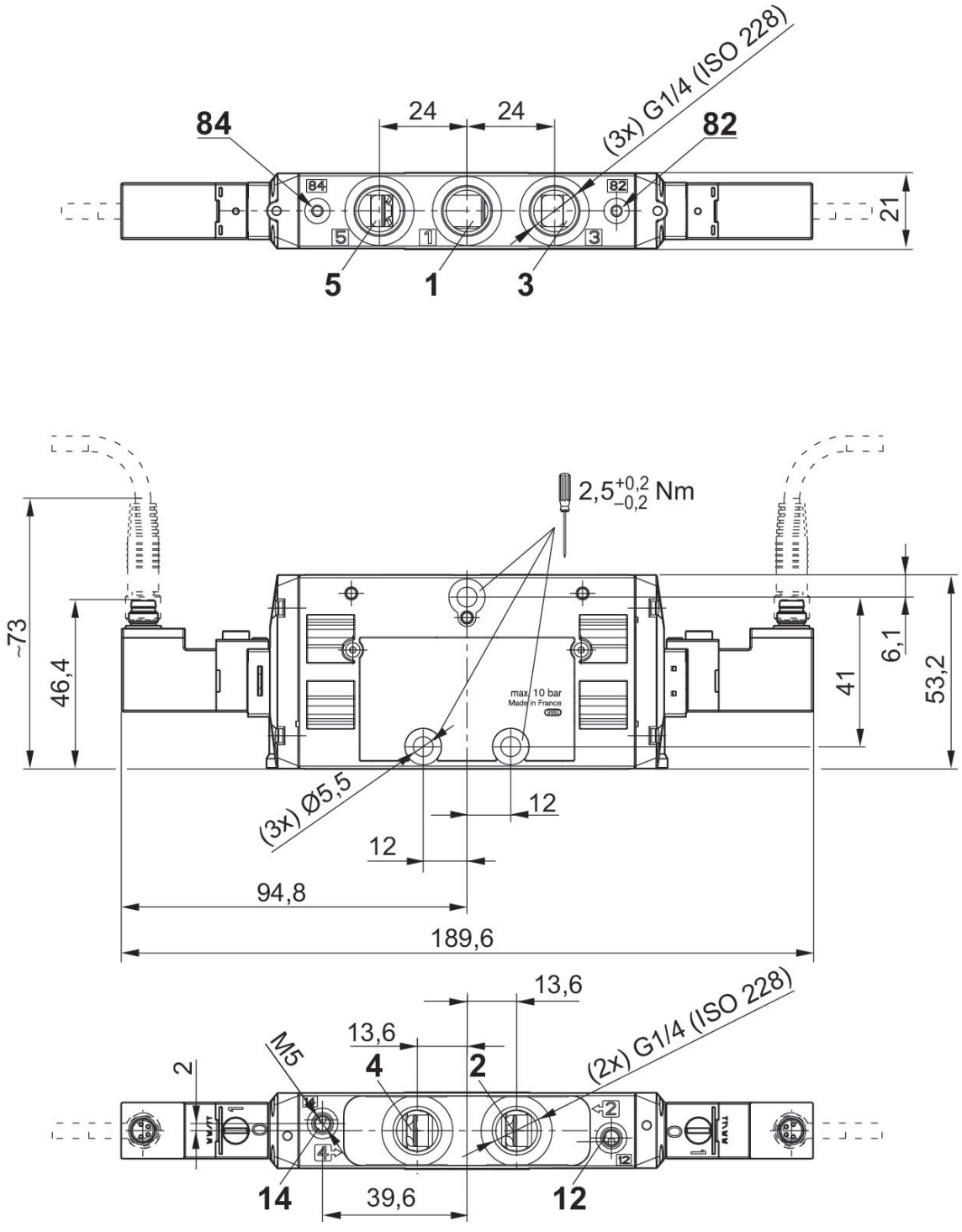

0820059796, 0820059797, 0820059798, 0820059896, 0820059897, 0820059898

PIN assignment and cable colors for valve plug connectors

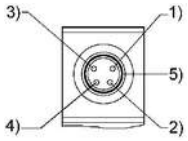

PIN assignment: 1) PIN not assigned 2) PIN not assigned 3) 0 V 4) 24 V 5) LED Cable colors 1) Brown 2) White 3) Blue 4) Black

2x3/2-directional valve, Series TC15

Flow: 1100 l/min
Activation: Pneumatically
Control pressure min./max.: 3 bar ... 10 bar
Type: Spool valve
Ambient temperature min./max.: -10 °C ... 50 °C
Medium temperature min./max.: -10 °C ... 50 °C
Working pressure min./max.: -0.9 bar ... 10 bar



	Valve function	Switching principle	Part No.
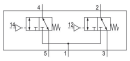	NC/NC	2x 3/2 NC/ NC, with spring return	R422102232
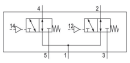	NO/NO	2x 3/2 NO/ NO, with spring return	R422102233
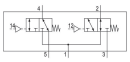	NC/NO	2x 3/2 NC/ NO, with spring return	R422102234

Dimensions

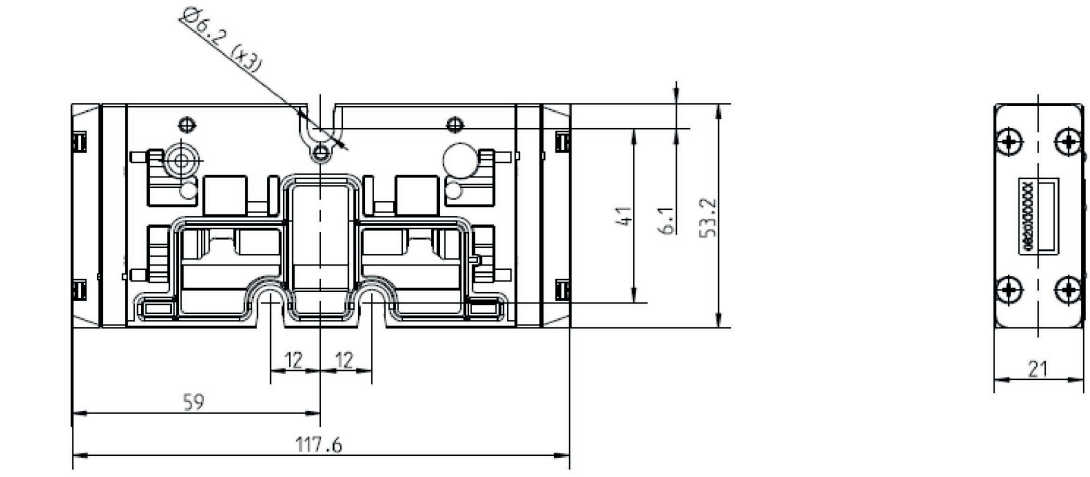

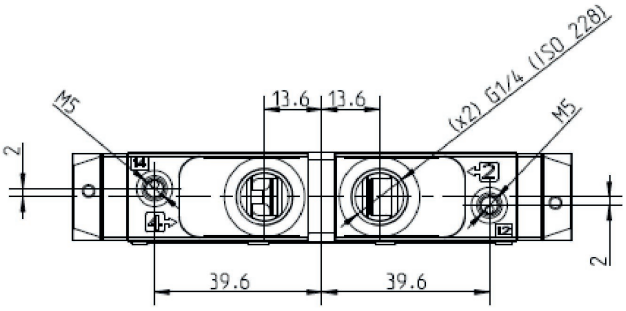

5/2-directional valve, Series TC15

Activation: Pneumatically
Type: Spool valve, positive overlapping
Ambient temperature min./max.: -10 °C ... 50 °C
Medium temperature min./max.: -10 °C ... 50 °C



	Switching principle	Pilot	Part No.
	5/2, double air pilot	External	0820258703
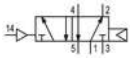	5/2, with air spring return	External	0820258701
	5/2, with spring return	External	0820258702
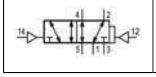	5/2, double air pilot	External	0820258704

Control pressure

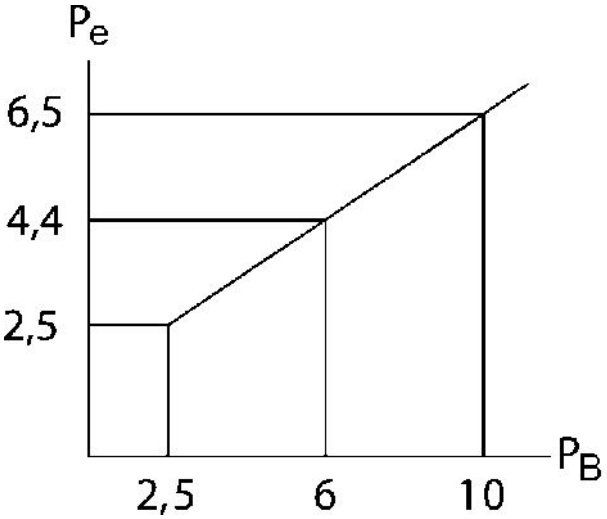

Pe = external control pressure, min.
P_B = Working pressure

5/3-directional valve, Series TC15

Activation: Pneumatically
Type: Spool valve, positive overlapping
Ambient temperature min./max.: -10 °C ... 50 °C
Medium temperature min./max.: -10 °C ... 50 °C



	Valve function	Switching principle	Pilot	Part No.
	Closed Center	5/3, closed center	External	0820259701
	Exhausted Center	5/3, exhausted center	External	0820259702
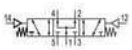	Pressurized Center	5/3, pressurized center	External	0820259703

Control pressure

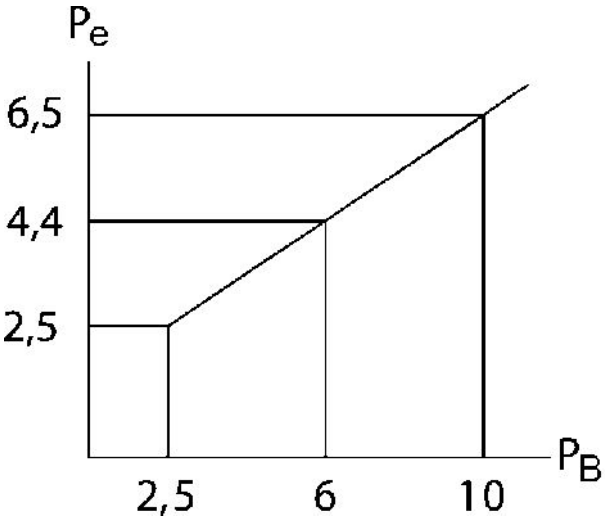

Pe = external control pressure, min.
P_B = Working pressure

Valve plug connector, series CON-VP, 0° female insert

Electrical connection 1: Socket ... form C ... 2+E
Electrical connection 2: open cable ends ... 3-pin
Protective circuit: Z-diode
Ambient temperature min./max.: -20 °C ... 80 °C



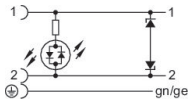

	Operational voltage	Protective circuit	Max. current [A]	Contact assignment	LED status display	Cable-Ø [mm]	Cable length [m]	Part No.
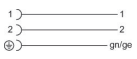	230 V AC/DC		6	2+E		5.9	3	1834484212
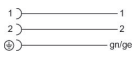	230 V AC/DC		6	2+E		5.9	5	1834484214
	24 V AC/DC	Z-diode	6	2+E	Yellow	5.9	3	1834484204
	24 V AC/DC	Z-diode	6	2+E	Yellow	5.9	5	1834484206
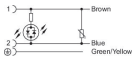	230 V AC/DC	Varistor	6	2+E	Yellow	5.9	3	1834484208
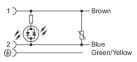	230 V AC/DC	Varistor	6	2+E	Yellow	5.9	5	1834484210

Dimensions

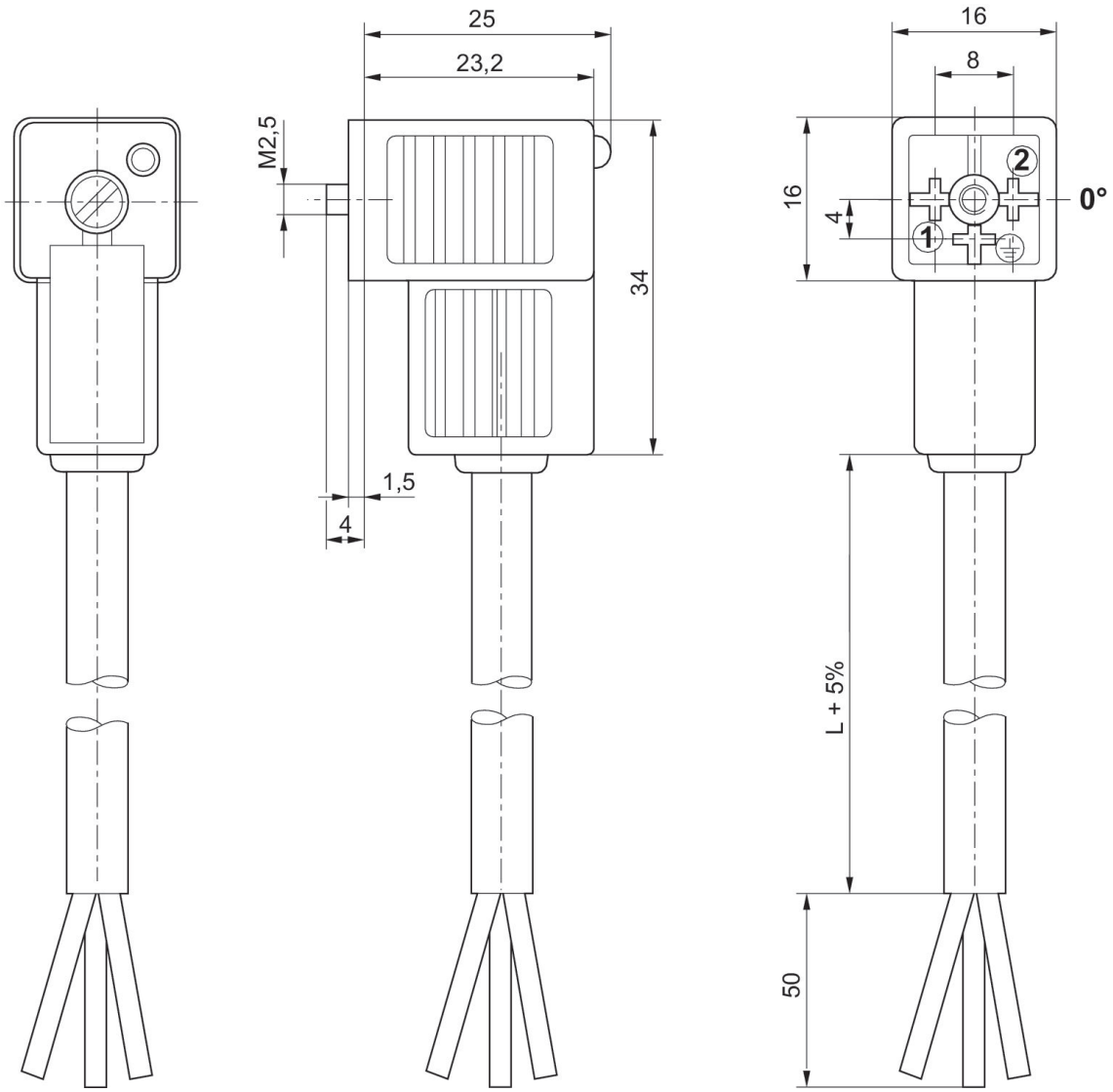

0° female insert

1834484212, 1834484214

Dimensions

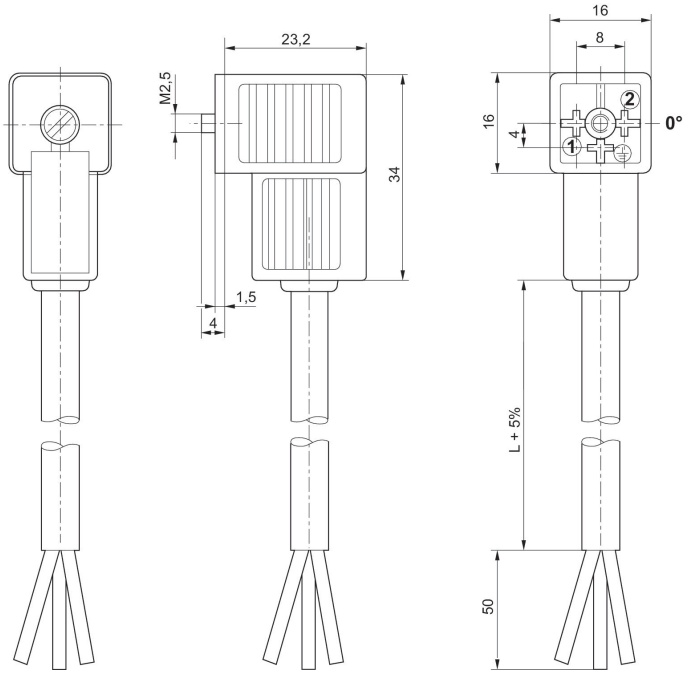

Valve plug connector with cable series CON-VP,, 180° female insert

Electrical connection 1: Socket ... form C ... 2+E
Electrical connection 2: open cable ends ... 3-pin
Protective circuit: Z-diode
Ambient temperature min./max.: -20 °C ... 80 °C



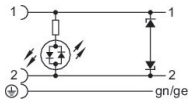

	Operational voltage	Protective circuit	Max. current [A]	Contact assignment	LED status display	Cable-Ø [mm]	Cable length [m]	Part No.
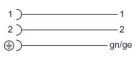	230 V AC/DC		6	2+E		5.9	3	1834484213
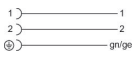	230 V AC/DC		6	2+E		5.9	5	1834484215
	24 V AC/DC	Z-diode	6	2+E	Yellow	5.9	3	1834484205
	24 V AC/DC	Z-diode	6	2+E	Yellow	5.9	5	1834484207
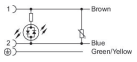	230 V AC/DC	Varistor	6	2+E	Yellow	5.9	3	1834484209
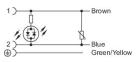	230 V AC/DC	Varistor	6	2+E	Yellow	5.9	5	1834484211
	24 V AC/DC	Z-diode	6	2+E	Yellow	5.9	10	1834484236

Dimensions

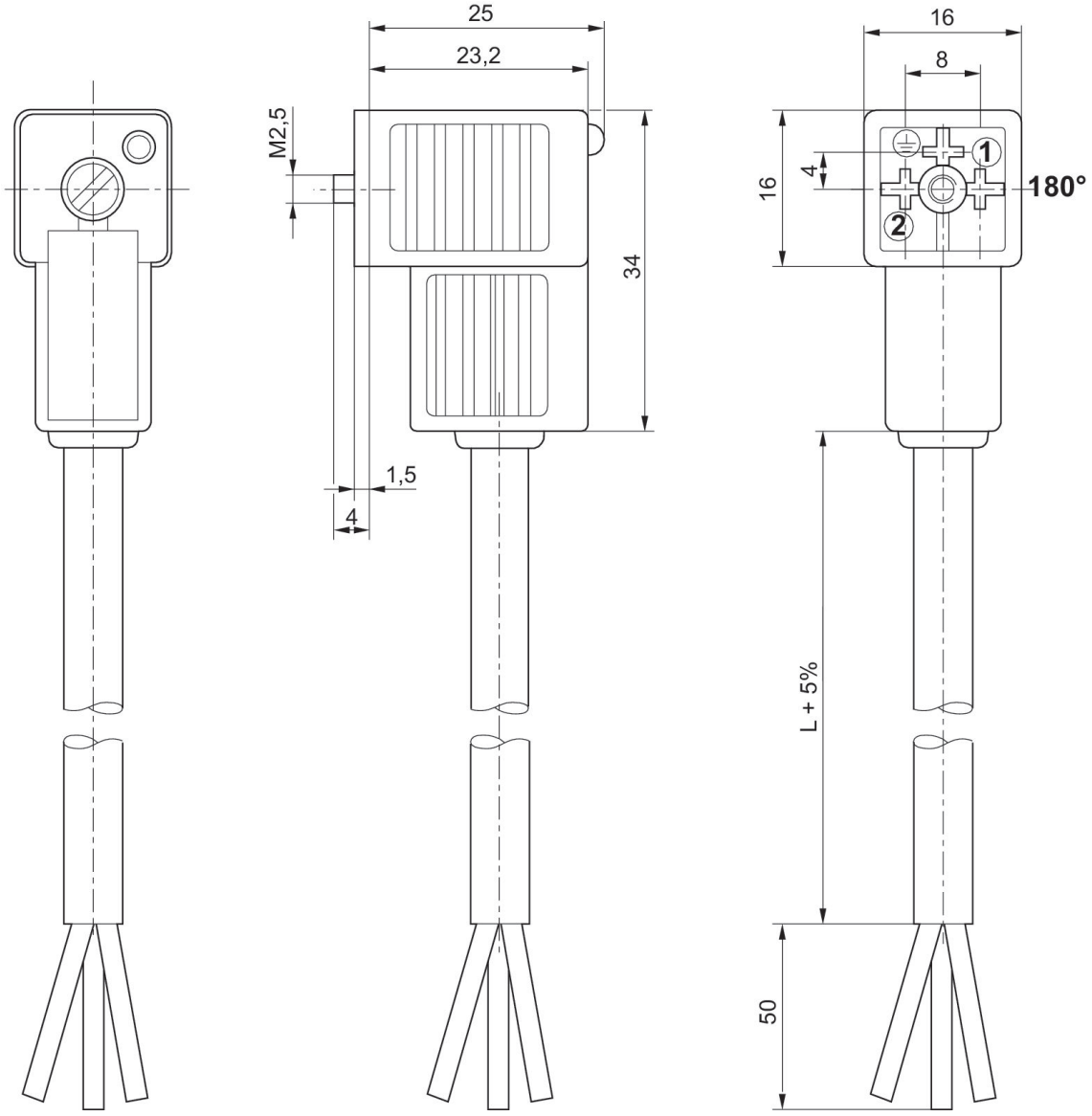

180° female insert

1834484213, 1834484215

Dimensions

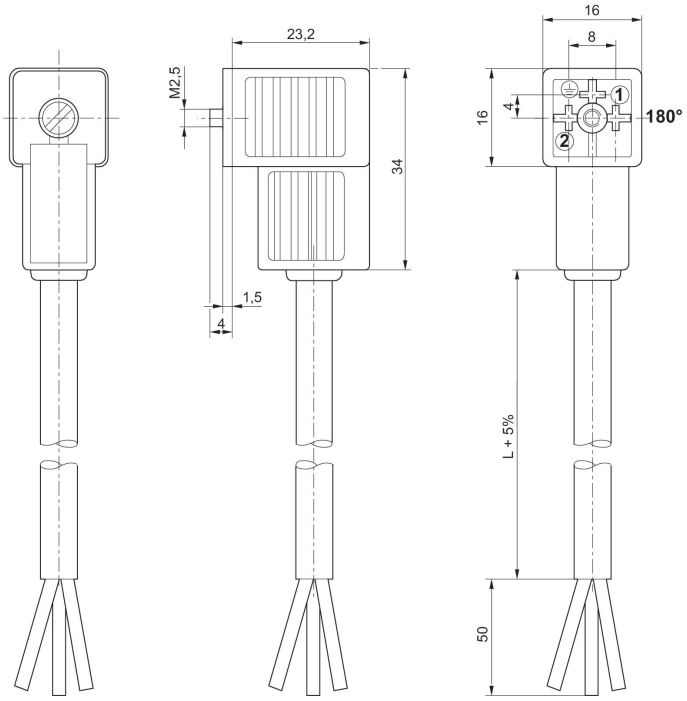

Valve plug connector, series CON-VP, form C, 300 V DC / 250 V AC

Electrical connection 1: EN 175301-803, form C
Ambient temperature min./max.: -40 °C ... 90 °C



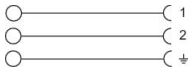

	Operational voltage	Protective circuit	Max. current [A]	Contact assignment	LED status display	min. suitable cable Ø [mm]	max. suitable cable Ø [mm]	Part No.
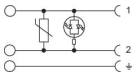	24 V AC/DC	Varistor	1.5	2+E	Green	4	6	4402050330

Dimensions

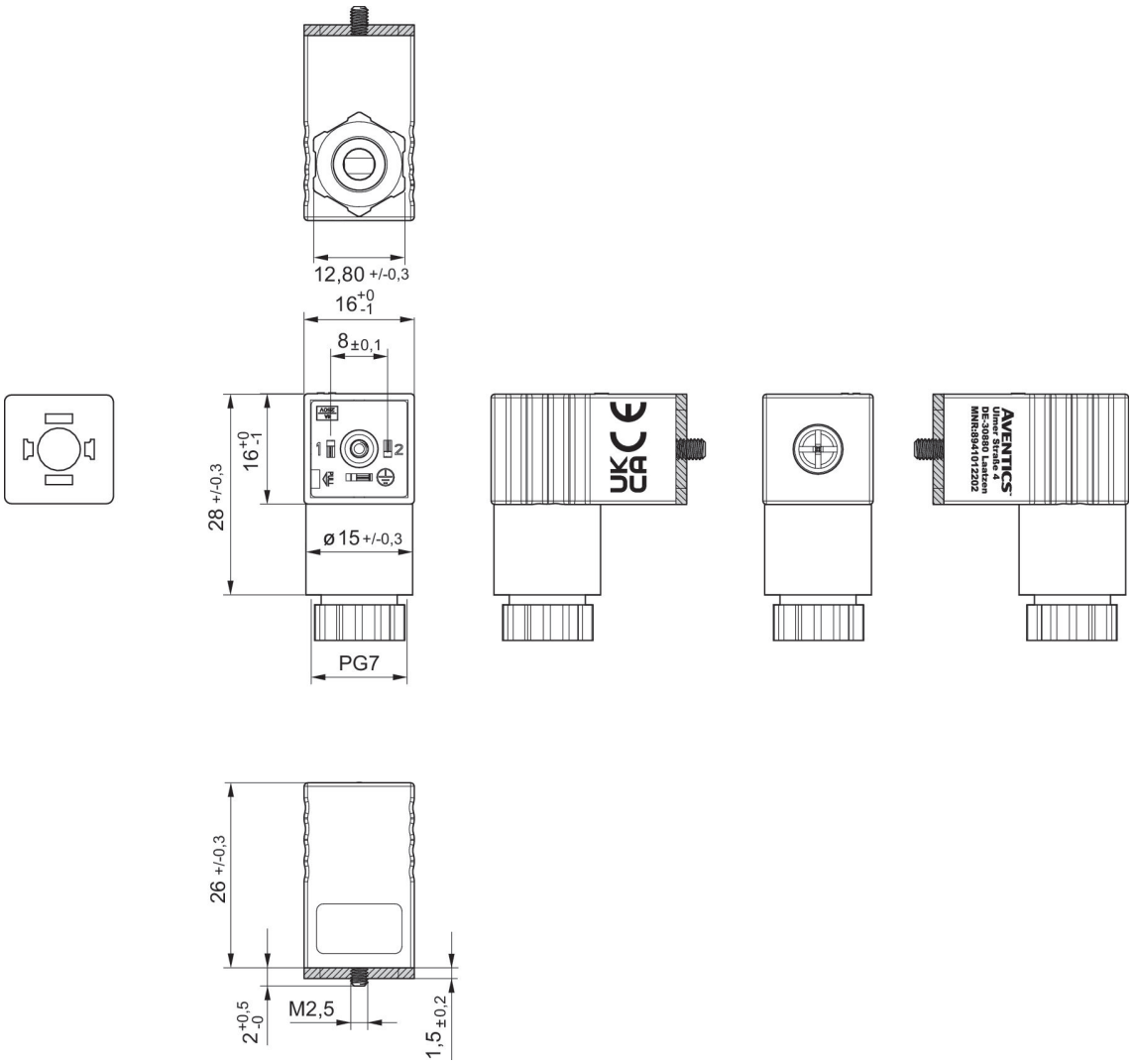

Profile seal

4402050330

Dimensions

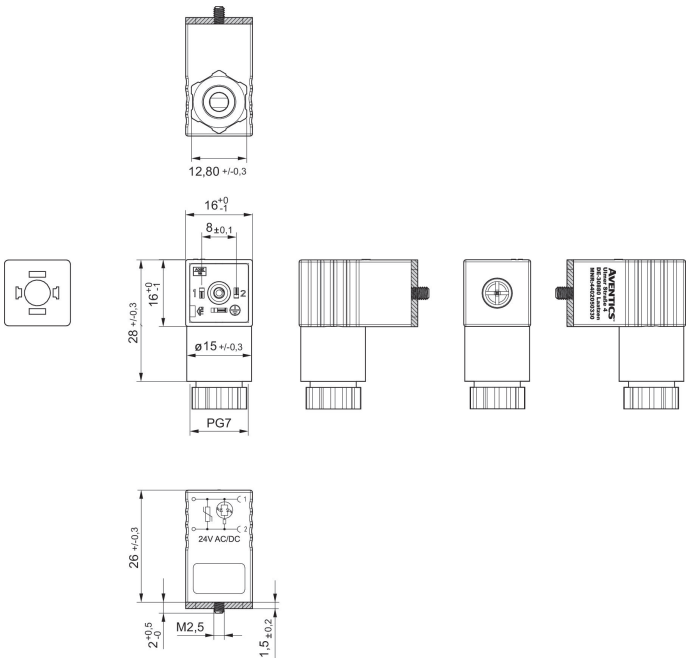

Profile seal

Coil, Series CO1, Form C

Coil width: 15 mm
Electrical connection 2, number of poles: 3-pin
Ambient temperature min./max.: -10 °C ... 50 °C





Operational voltage DC	Number of poles	Operational voltage AC at 50 Hz	Operational voltage AC at 60 Hz	Voltage tolerance DC	Voltage tolerance AC 50 Hz	Voltage tolerance AC 60 Hz	Power consumption DC [W]	Part No.
	3-pin	110 V	110 V		-10 % / +10 %	-10 % / +10 %		R422101598
	3-pin	230 V	230 V		-10 % / +10 %	-10 % / +10 %		R422101599
24 V	3-pin			-10 % / +10 %			2	R422101600
	3-pin	24 V	24 V		-10 % / +10 %	-10 % / +10 %		R422101601
12 V	3-pin			-10 % / +10 %			2	R422101602

Holding power AC 50 Hz [VA]	Switch-on power AC 50 Hz [VA]	Part No.
1.6	2.2	R422101598
1.6	2.2	R422101599
		R422101600
1.6	2.2	R422101601
		R422101602

Dimensions

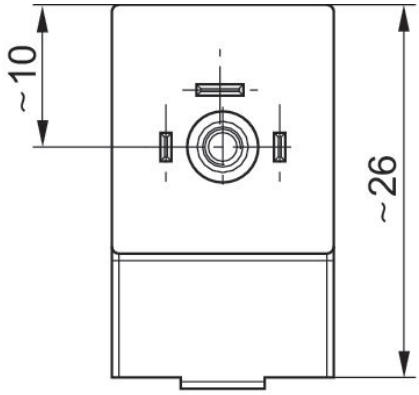

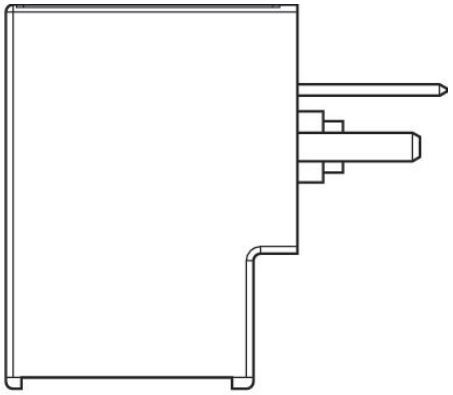

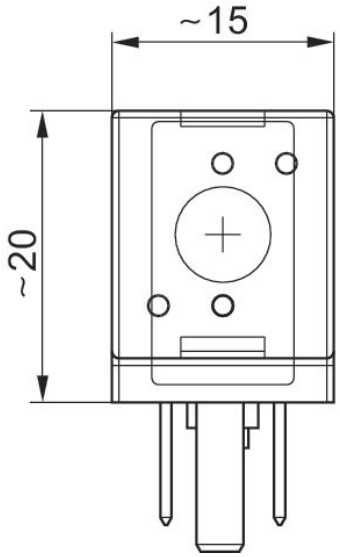

Coil, Series CO1, M8

Coil width: 16 mm
Electrical connection 2, thread size: M8x1
Ambient temperature min./max.: -10 °C ... 50 °C





Operational voltage DC	Number of poles	Voltage tolerance DC	Power consumption DC [W]	Part No.
24 V	4-pin	-10 % / +10 %	2.2	R422101603
24 V	3-pin	-10 % / +10 %	2.2	R422101604

Dimensions

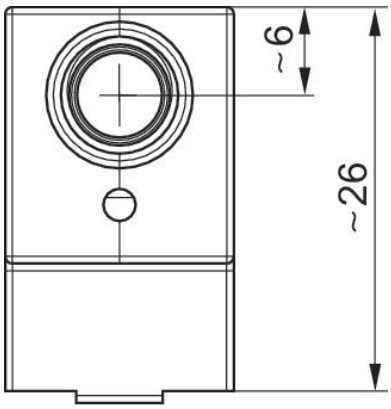

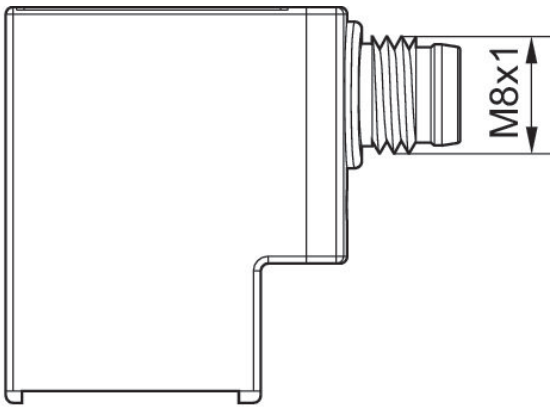

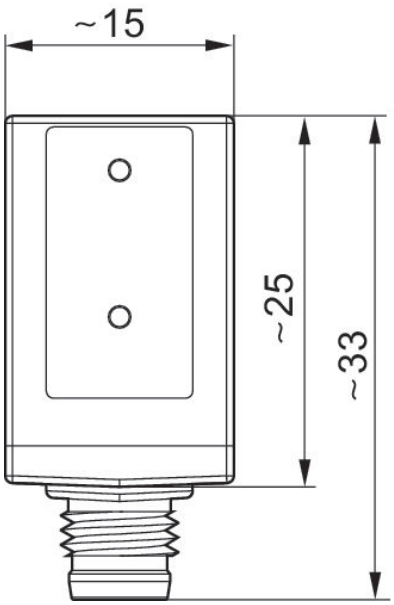

Round plug connector, Series CON-RD

Electrical connection 1: Socket ... M8x1 ... 3-pin ... straight
Electrical connection 2: open cable ends ... 3-pin
Certification: UL (Underwriters Laboratories)
Ambient temperature min./max.: -25 °C ... 85 °C



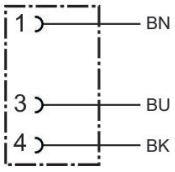

Operational voltage	Electrical connection 1, type	Electrical connection 1, thread size	Electrical connection 1, number of poles	Electrical connection 1, coding	Electrical connection 2, type	Electrical connection 2, number of poles	Cable length [m]	Part No.
48 V AC/DC	Socket	M8x1	3-pin	A-coded	open cable ends	3-pin	3	1834484166
48 V AC/DC	Socket	M8x1	3-pin	A-coded	open cable ends	3-pin	5	1834484168
48 V AC/DC	Socket	M8x1	3-pin	A-coded	open cable ends	3-pin	10	1834484247

Dimensions

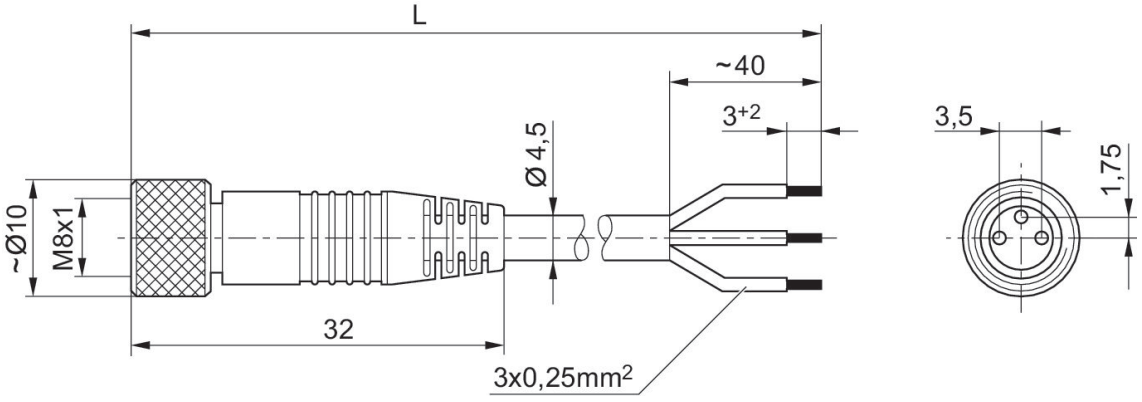

L = length

1834484166, 1834484168, 1834484247

Pin assignment, socket

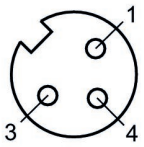

(1) BN=brown (3) BU=blue (4) BK=black

Round plug connector, Series CON-RD

Electrical connection 1: Socket ... M8x1 ... 3-pin ... angled
Electrical connection 2: open cable ends ... 3-pin
Ambient temperature min./max.: -40 °C ... 85 °C



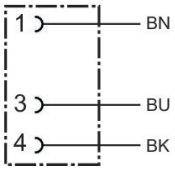

Operational voltage	Electrical connection 1, type	Electrical connection 1, thread size	Electrical connection 1, number of poles	Electrical connection 1, coding	Electrical connection 2, type	Electrical connection 2, number of poles	Cable length [m]	Part No.
48 V AC/DC	Socket	M8x1	3-pin	A-coded	open cable ends	3-pin	3	1834484167
48 V AC/DC	Socket	M8x1	3-pin	A-coded	open cable ends	3-pin	5	1834484169
48 V AC/DC	Socket	M8x1	3-pin	A-coded	open cable ends	3-pin	10	1834484248

Dimensions

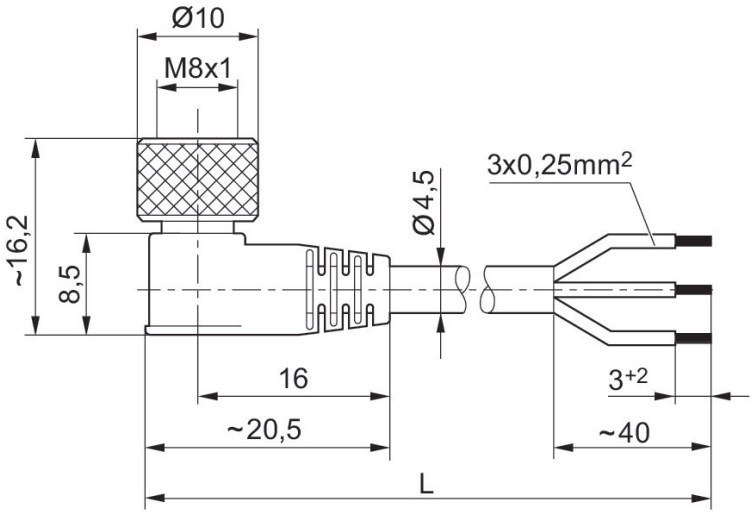

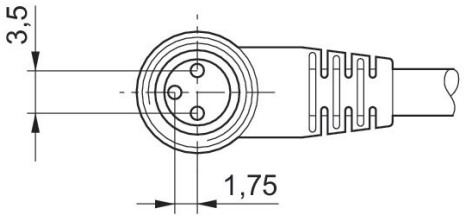

L = length

1834484167, 1834484169, 1834484248

Pin assignment, socket

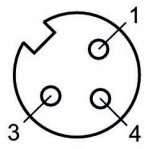

(1) BN=brown (3) BU=blue (4) BK=black

Round plug connector, Series CON-RD

Electrical connection 1: Socket ... M8x1 ... 3-pin ... straight
Connection type: Soldering
Ambient temperature min./max.: -25 °C ... 80 °C



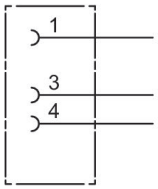

Operational voltage	Coding	Shielding	Connection type	Max. current [A]	min. suitable cable Ø [mm]	max. suitable cable Ø [mm]	Part No.
48 V AC/DC	A-coded	unshielded	Soldering	4	3.5	5	1834484173

Dimensions

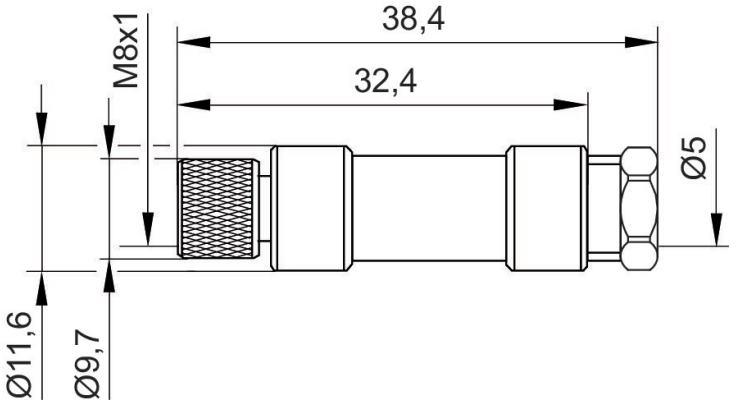

1834484173

Pin assignment, socket

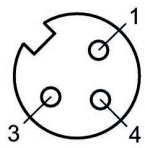

Round plug connector, Series CON-RD

Electrical connection 1: Socket ... M8x1 ... 3-pin ... angled
Connection type: Soldering
Ambient temperature min./max.: -25 °C ... 80 °C



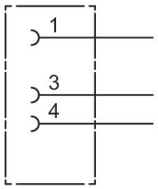

Operational voltage	Coding	Shielding	Connection type	Max. current [A]	min. suitable cable Ø [mm]	max. suitable cable Ø [mm]	Part No.
48 V AC/DC	A-coded	unshielded	Soldering	4	3.5	5	1834484174

Dimensions in mm

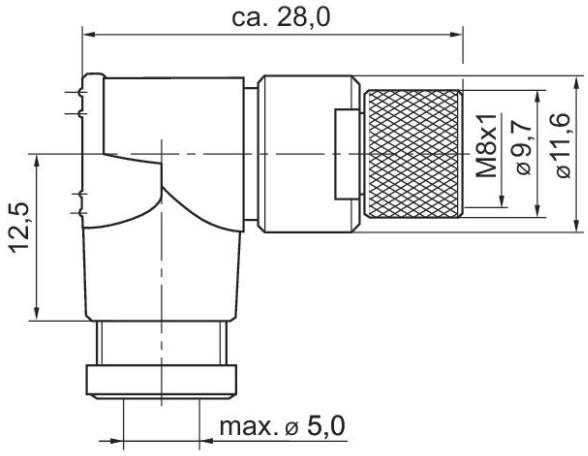

1834484174

Pin assignment, socket

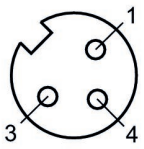

Round plug connector, Series CON-RD, open cable ends, straight, 4-pin

Electrical connection 1: Socket ... M8x1 ... 4-pin ... straight
Electrical connection 2: open cable ends ... 4-pin
Ambient temperature min./max.: -40 °C ... 85 °C



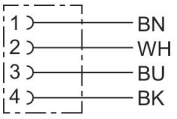

Operational voltage	Electrical connection 1, type	Electrical connection 1, thread size	Electrical connection 1, number of poles	Electrical connection 1, coding	Electrical connection 2, type	Electrical connection 2, number of poles	Cable length [m]	Part No.
48 V AC/DC	Socket	M8x1	4-pin	A-coded	open cable ends	4-pin	3	1834484144
48 V AC/DC	Socket	M8x1	4-pin	A-coded	open cable ends	4-pin	5	1834484146

Dimensions

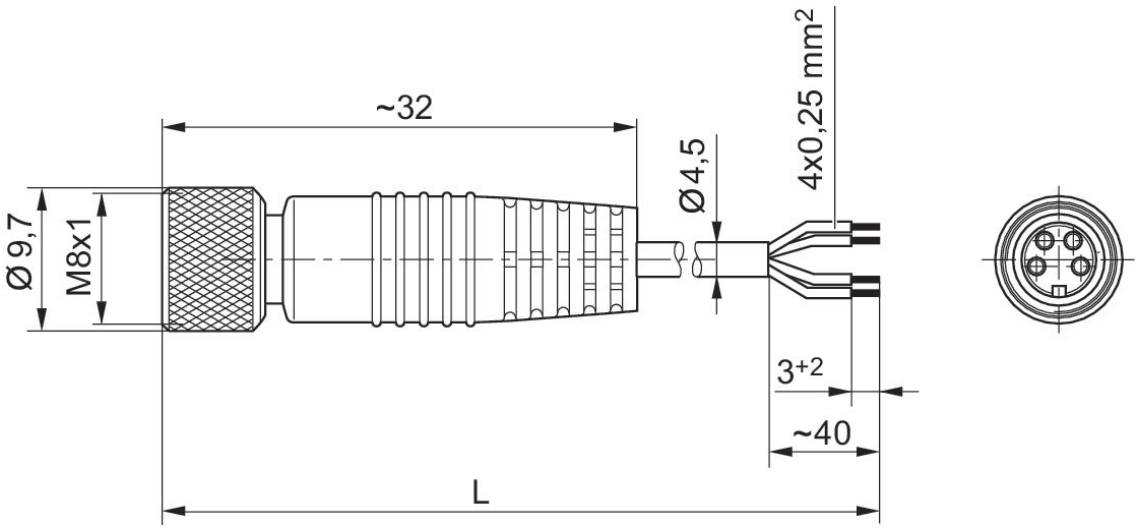

L = length

1834484144, 1834484146

Pin assignment, socket

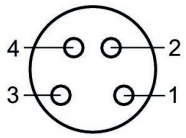

(1) BN=brown (2) WH=white 3) BU=blue (4) BK=black

Round plug connector, Series CON-RD, Plug M8x1, 4-pin

Electrical connection 1: Socket ... M8x1 ... 4-pin ... angled
Electrical connection 2: open cable ends ... 4-pin
Ambient temperature min./max.: -40 °C ... 85 °C



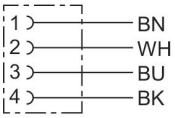

Operational voltage	Electrical connection 1, type	Electrical connection 1, thread size	Electrical connection 1, number of poles	Electrical connection 1, coding	Electrical connection 2, type	Electrical connection 2, number of poles	Cable length [m]	Part No.
48 V AC/DC	Socket	M8x1	4-pin	A-coded	open cable ends	4-pin	3	1834484145
48 V AC/DC	Socket	M8x1	4-pin	A-coded	open cable ends	4-pin	5	1834484147

Dimensions in mm

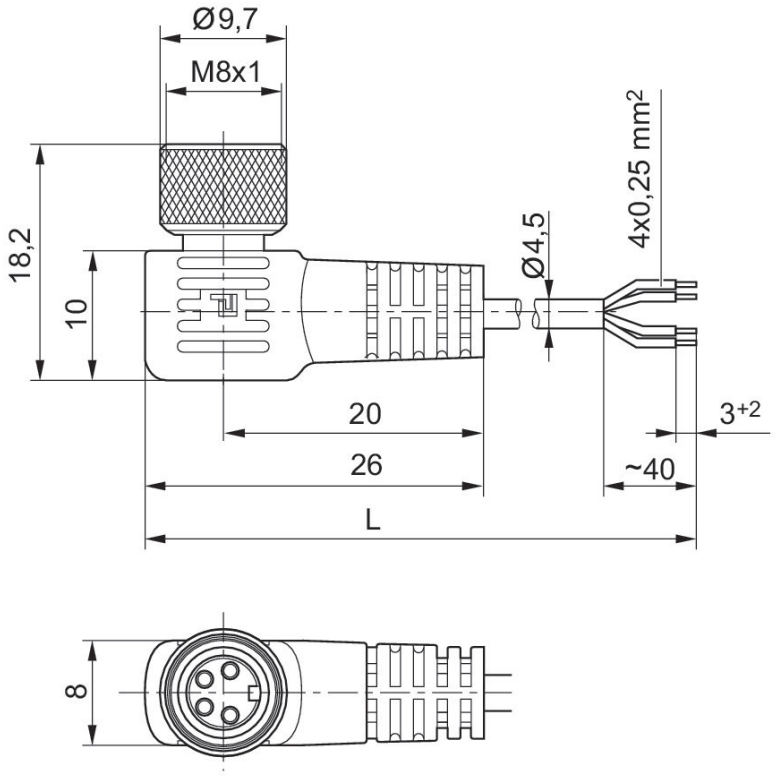

L = length

1834484145, 1834484147

Pin assignment, socket

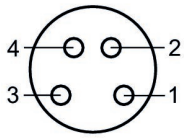

(1) BN=brown (2) WH=white 3) BU=blue (4) BK=black

Silencers, series SI1, Sintered bronze

Compressed air connection type: External thread
Silencer material: Sintered bronze
Ambient temperature min./max.: -25 °C ... 80 °C
Working pressure min./max.: 0 bar ... 10 bar





G	Sound pressure level [dB]	Nominal flow [l/min]	Delivery unit [piece]	Weight [kg]	Part No.
G 1/8	75	1623	10	0.01	1827000000
G 1/2	90	7223	2	0.08	1827000003

1827000000

Dimensions in mm

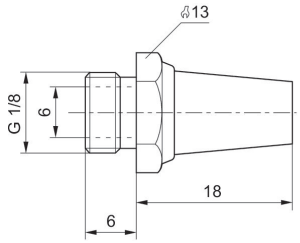

1827000003

Dimensions in mm

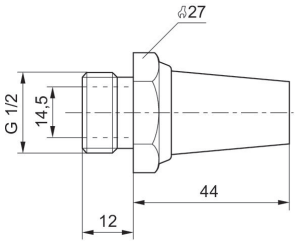

Flow diagram

1827000000

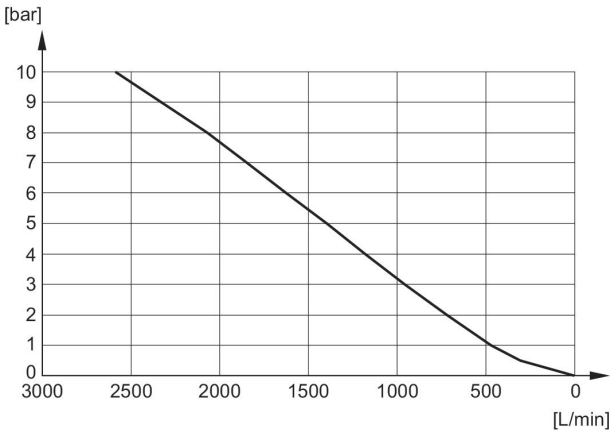

Flow diagram

1827000003

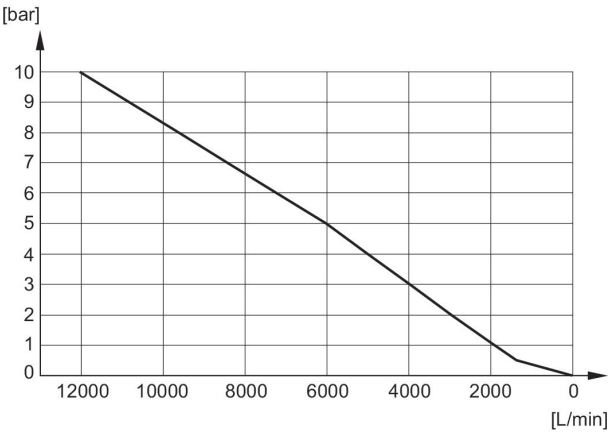

Mounting kit for DIN rails DIN



Type	Type	Delivery unit [piece]	Weight [kg]	Part No.
Mounting kit for DIN rails EN 60715, 35x15	26 mm	1	0.014	1821398007

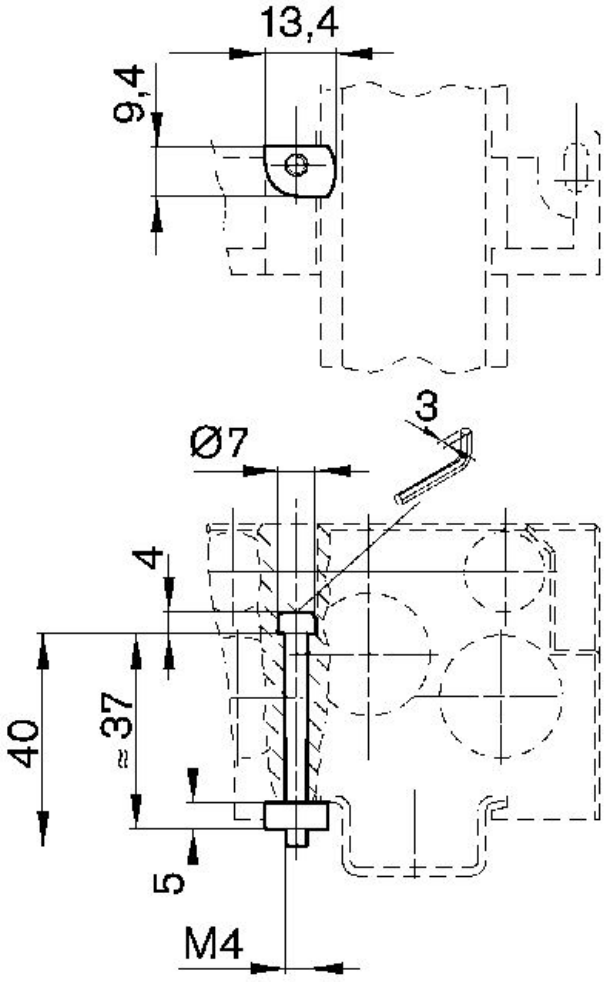

Accessories, Series TC15



Type	Length [mm]	Weight [kg]	Part No.
end plate kit: internal pilot, pneumatic subbase, right		0.435	1825504357
End plate kit: internal pilot, right pneumatic subbase, connection thread NPTF		0.435	R422101300
end plate kit: external pilot, pneumatic subbase, right		0.429	1825504358
End plate kit: external pilot, right pneumatic subbase, connection thread NPTF		0.429	R422101301
end plate kit: internal pilot, pneumatic subbase, left		0.485	R422000802
end plate kit: external pilot, pneumatic subbase, left		0.434	R422000803
end plate kit: internal pilot, pneumatic subbase on both sides		0.75	R422000678
end plate kit: external pilot, pneumatic subbase on both sides		0.935	R422000679
supply/separation plate, channels 1,3,5 closed, for subbase, right		0.245	1821039042

Type	Length [mm]	Weight [kg]	Part No.
Supply/separation plate, channels 1, 3, 5 closed, for right subbase, connection thread NPTF		0.245	R422101302
supply/separation plate, channels 1,3,5 closed, for subbase, left		0.245	R412009789
supply/separation plate, channel 1 closed, channels 3 and 5 open, for subbase, right		0.244	R422000726
Supply/separation plate, channel 1 closed, channels 3 and 5 open, for right subbase, connection thread NPTF		0.244	R422101303
Blanking plate		0.265	R422000502
Tie rod extension for 2 valve positions, 1 piece	67.6	0.012	1823053258
Tie rod extension for 3 valve positions, 1 piece	88.5	0.017	1823053259
Tie rod extension for 4 valve positions, 1 piece	109.4	0.021	1823053260
Tie rod extension for 5 valve positions, 1 piece	130.3	0.026	1823053261
Tie rod extension for 6 valve positions, 1 piece	151.2	0.031	1823053262
Tie rod extension for 7 valve positions, 1 piece	172.1	0.036	1823053263
Tie rod extension for 8 valve positions, 1 piece	193	0.04	1823053264

Type	Length [mm]	Weight [kg]	Part No.
Tie rod extension for 9 valve positions, 1 piece	213.9	0.046	1823053265
Tie rod extension for 10 valve positions, 1 piece	234.8	0.05	1823053266
Tie rod extension for 11 valve positions, 1 piece	255.7	0.055	1823053267
Zugankererweiterung für 12 Ventilplätze, 1 piece	276.6	0.068	1823053268
Tie rod extension, 1 piece		0.004	1823503999
Sealing kit, 10 pieces		0.04	R422000141

Dimensions
Tie-rods

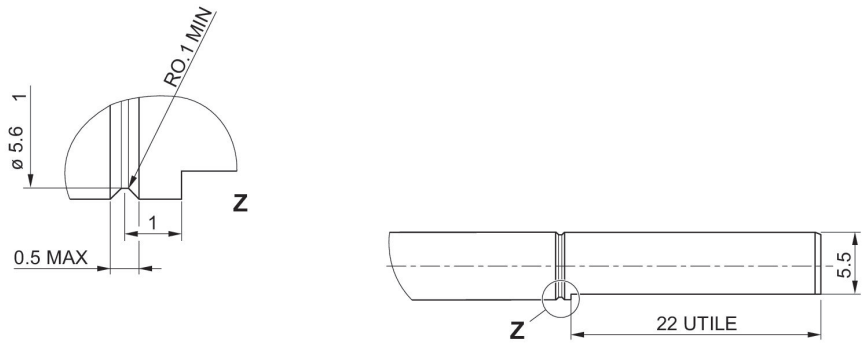

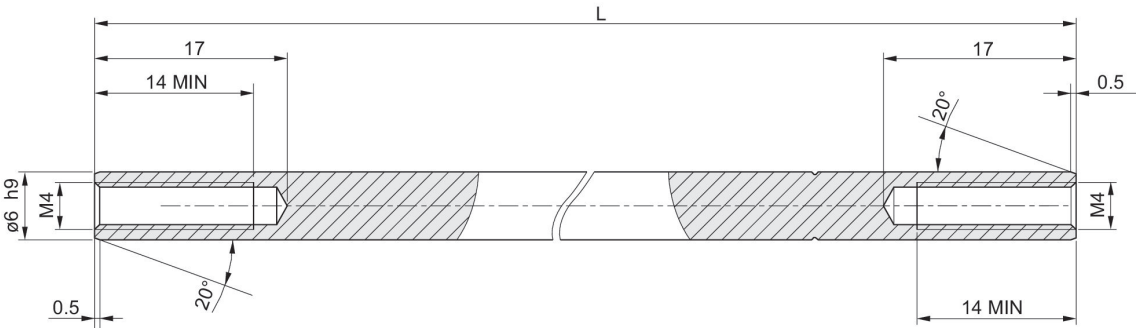

Efficient pneumatic solutions, our program: cylinders and drives, valves and valve systems, air supply management, proportional pressure control valves







Visit us: **www.Emerson.com/aventics**
Your local contact: **Emerson.com/contactus**

Emerson.com
Facebook.com/EmersonAutomationSolutions
LinkedIn.com/company/Emerson-Automation-Solutions
Twitter.com/EMR_Automation

The Emerson logo is a trademark and service mark of Emerson Electric Co. AVENTICS is a registered trademark of one of the Emerson family of companies. All other trademarks are the property of their respective owners. © 2020 Emerson Electric Co. All rights reserved.

EMERSON.

CONSIDER IT SOLVED®