Monitorable Beacons / Monitorable LED Signal Beacon 806

Monit. LED Beacon BWM 24VDC YE



Part No.: 806.350.55

MECHANICAL DATA	
Height	108 mm
Diameter	75 mm
Materials	PA-GF PC PC/ABS
Dome colour	Yellow
Housing colour	Black
Protection category	IP65
Connection	Spring-type terminal
cross-sectional area maximum	2,50mm² / 14AWG
Cable entry	Through hole
Cable entry maximum	d = 14 mm
Type of fixing	Base mounting Wall mounting
Working temperature minimum	-20°C
Working temperature maximum	+50°C
Weight with packaging	154 g
Product weight	121 g

ELECTRICAL DATA	
Operating voltage	24V
Operating voltage type	DC
Operating voltage tolerance	+/- 10%
Rated operational voltage	24 VDC
Rated operational current	60 mA
Rated inrush current	60 mA
Protection class	Protection class 2
Pollution degree	3

OPTICAL DATA	
Light source	LED
Light colour	Yellow
Optical signal image	Permanent
Service life optical	100,000 h maximum

APPROVAL DATA	
Conforms with CE	Yes
WEEE	Yes
Conforms with ATEX-directive	No
Conforms with CCC	No

! For additional installation and mounting information, refer to the appropriate user guide at www.werma.com. This printed copy is for information only and is subject to alteration.

Monitorable Beacons / Monitorable LED Signal Beacon 806

Monit. LED Beacon BWM 24VDC YE

Conforms with UL	cULus
UL Type Rating	Type 12
Conforms with FCC	No
Conforms with IC	No
EAC certificate available	Yes
Conforms with AS-I	No
ICAO Certification	No
Conforms with DNV	No
Conforms with RoHS CN	No
Conforms with VdS	No

DRAWING

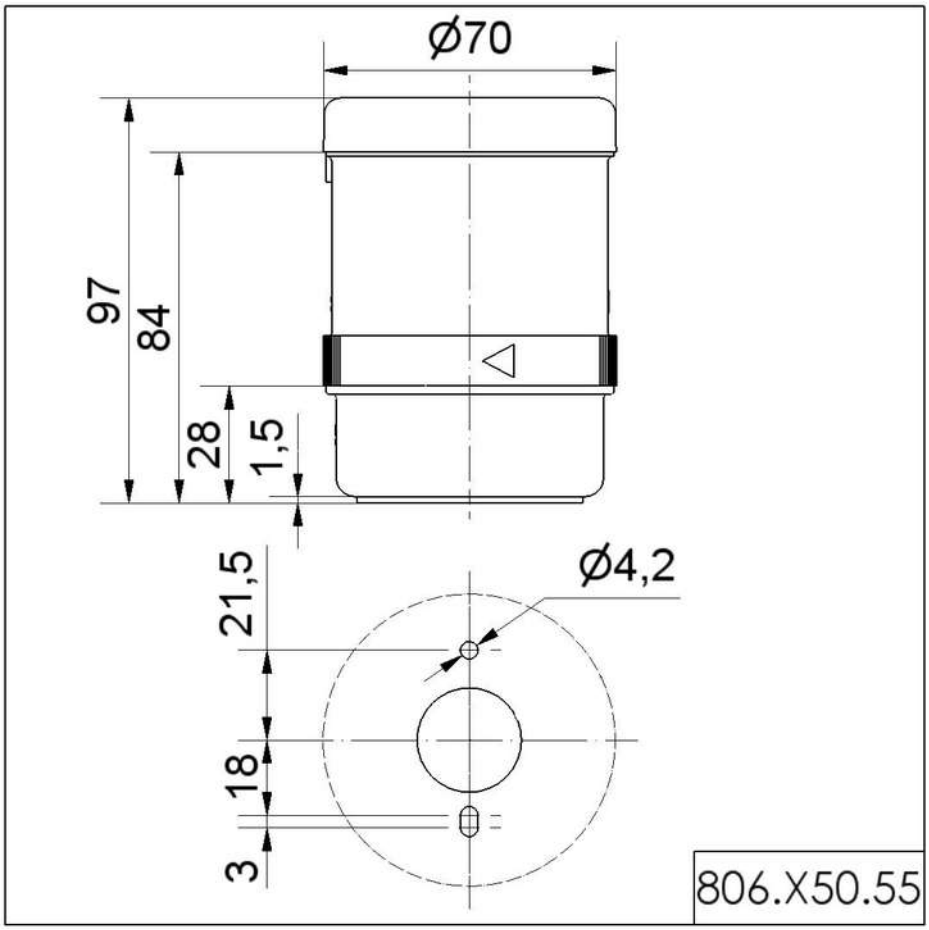

! For additional installation and mounting information, refer to the appropriate user guide at www.werma.com. This printed copy is for information only and is subject to alteration.