DATA SHEET	53119200
SKINTOP® GMP-HF-M	valid from : 15.1.2016

The SKINTOP® GMP-HF-M, a hexagonal locknut of special halogen-free polyamide, is used where cable glands are attached but there is only a pass-through hole.
When the cable gland is fixed in a thread, a higher protection against vibration can be attained with this locknut.



Technical features:

Material	Polyamide, halogen-free, V-0 acc. to UL 94, flame-retardant, self-extinguishing
Sizes	M12x1,5 up to M63x1,5 acc. to EN 60423
Temperature range	-20 °C up to +100 °C
Colour	RAL 7035 light-grey

Norm references:

Note:

Designed for use in connection with SKINTOP® ST-HF-M

For more information please see our current catalogue.

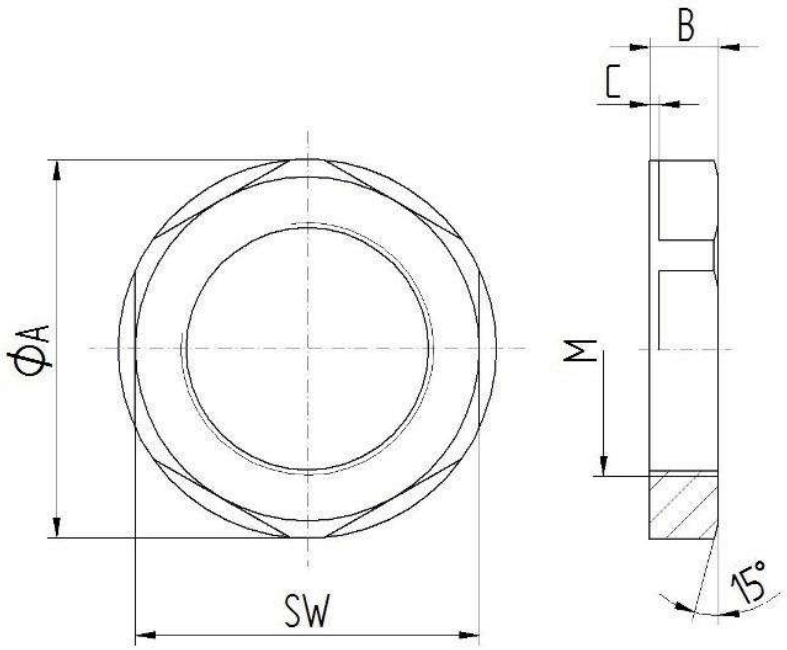

M	SW [mm]	Ø A [mm]	B [mm]	C [mm]	Article No.
M12x1,5	17	18,7	5	0,8	53119200
M16x1,5	22	24,2	5	0,8	53119210
M20x1,5	27	29,7	6	0,9	53119220
M25x1,5	34	37,4	6	0,9	53119230
M32x1,5	41	45,1	7	1	53119240
M40x1,5	50	55	7	1	53119250
M50x1,5	60	66	8	1,2	53119260
M63x1,5	75	82,5	8	1,2	53119270